RESOLUTION NO. 5117

A RESOLUTION OF THE CITY COUNCIL OF THE CITY OF SAUSALITO ADOPTING THE STANDARD SPECIFICATIONS OF THE SAUSALITO-MARIN CITY SANITARY DISTRICT

WHEREAS, the design and construction of all public sewerage facilities and private sewers in the City of Sausalito, whether privately financed and constructed under permits issued by the City, or whether publicly financed and constructed under contract with the City warrants uniform standards; and

WHEREAS, the jurisdiction of the City of Sausalito includes the entire sewerage system and its appurtenances within the City Limits from the point of connection with the building plumbing to the discharge to the facilities of the Sausalito-Marin City Sanitary District (the "District") treatment plant; and

WHEREAS, the private sewer between the main sewer and the building is privately owned and maintained, and neither the City nor the District has no ownership or maintenance responsibility therefor; and

WHEREAS, the Municipal Code of the City of Sausalito ("SMC") and enabling Ordinances comprise the City's rules and regulations with respect to the construction and use of sanitary sewerage facilities; and

WHEREAS, in general, the SMC and Ordinances provides for the authorities of the Director of Public Works, City Engineer, and Sanitary Sewer System Coordinator; provides for regulation of private sewer construction; provides for the use and construction of public sewers; fixes annexation, plan checking, and permit and inspection fees, and provides for the establishment of uniform connection charges; and

WHEREAS, knowledge of the SMC and Ordinance provisions and policies is essential to those proposing to design or construct sewerage facilities in the City; and

WHEREAS, it is in the interest of the City of Sausalito for the existence of consistent Standard Specifications between the City and the District; and

WHEREAS, the District has prepared a set of Standard Specifications dated 2007; and

WHEREAS, said Standard Specifications have been adopted by the Board of Directors of the District; and

WHEREAS, the City Engineer and Director of Public Works of the City of Sausalito recommend that said Standard Specifications be adopted by the City of Sausalito.

NOW, THEREFORE, BE IT RESOLVED that the City Council of the City of Sausalito:

1. Adopts the Standard Specifications of the Sausalito-Marin City Sanitary District dated 2007 and on file in the Office of the City Clerk of the City of Sausalito.
2. Directs that the City Engineer make additions, deletions and revisions to said Standard Specifications from time to time in order to maintain said updated and in conformance with any additions, revisions and deletions approved by the District.
3. Directs that the City Engineer make the Standard Specifications currently effective available to the public via the City's website, in hardcopy for the cost of duplication, and on file in the Office of the City Clerk of the City of Sausalito.

PASSED AND ADOPTED at a regular meeting of the City Council of the City of Sausalito on the 2nd day of March, 2010 by the following vote:

AYES:	Councilmembers:	Ford, Kelly, Pfeifer, Weiner and Mayor Leone
NOES:	Councilmembers:	None
ABSTAIN:	Councilmembers:	None
ABSENT:	Councilmembers:	None

MAYOR OF THE CITY OF SAUSALITO

ATTEST:

CITY CLERK

STANDARD SPECIFICATIONS

SAUSALITO-MARIN CITY SANITARY DISTRICT

2007

TABLE OF CONTENTS

PART A - GENERAL INFORMATION

SECTION 1 GENERAL INFORMATION
1-01 Introduction and Scope 1
1-02 District Ordinances 1
1-03 Annexation Policy 1
1-04 Downstream Capacity Policy 1
1-05 Right-of-Way Policy 2
1-06 Condemnation Policy 2
1-07 Engineering Policy 2
1-08 Environment Impact Report Regulations 3

SECTION 2 DEFINITIONS AND TERMS
2-01 Definition of Terms 5
2-02 Abbreviations 9

PART B - ENGINEERING AND DESIGN REQUIREMENTS

SECTION 3 DESIGN CALCULATIONS AND PLAN PREPARATION
3-01 Design Calculations 11
3-02 Size of Plans and Data Required 11
3-03 Rights-of-Way 13
3-04 Easements for Future Extensions 14
3-05 Flood Control Approval 14
3-06 Soils Investigation 14
3-07 Construction Permits 14

SECTION 4 DESIGN STANDARDS
4-01 Design Criteria 15
4-02 Prohibited Wastes 16
4-03 Sewer Pipes 18
4-04 Sewer Structures 22

SECTION 5 PLAN APPROVAL AND PERMIT ISSUANCE
5-01 General 25
5-02 Plan Checking Deposit 25
5-03 Preliminary Review 25
5-04 Final Review and Approval 25
5-05 Plan Revisions 26
5-06 Statement of Fees and Charges 26

5-07 Issuance of Main Extension Permit 26
5-08 Subdivisions 26
5-09 Items to Consider before Submitting Plans 27

SECTION 6 CONSTRUCTION ENGINEERING
6-01 Staking Requirements 29
6-02 Side Sewer Locations 29
6-03 Survey Authorization and Responsibility 29
6-04 Field Changes 29
6-05 Soil Compaction Tests 29
6-06 Record Drawings 29

SECTION 7 DISTRICT PERMITS, LICENSES AND BONDS
7-01 Permits 31
7-02 Licenses 31
7-03 Bonds 31

PART C - GENERAL CONSTRUCTION REQUIREMENTS

SECTION 8 CONTROL OF WORK
8-01 Authority of District 33
8-02 Plans 33
8-03 Suggestions to Contractor 34
8-04 Conformity with Plans and Allowable Deviations 34
8-05 Interpretation of Plans and Specifications 34
8-06 Superintendence 34
8-07 Character of Workmen 34
8-08 Construction Utilities 35
8-09 Lines and Grades 35
8-10 Proof of Compliance with Specifications and Drawings 35
8-11 Errors and Omissions 35
8-12 Inspection 36
8-13 Inspection by Division of Industrial Safety 36
8-14 Commencement of Work and Delays – Permit Work 36
8-15 Removal of Defective and Unauthorized Work 37
8-16 Access to Work 37
8-17 Placing Portions of Work in Service 37
8-18 Removal or Replacement of Work Done Without Lines, Grades or Levels 38
8-19 Equipment and Methods 38
8-20 Unfavorable Weather and Other Conditions 38
8-21 Easement Construction 38
8-22 Alterations 39

8-23 Cleaning Up 39
8-24 Final Inspection 39

SECTION 9 CONTROL OF MATERIAL
9-01 Source of Supply and Quality of Materials 41
9-02 Quality in Absence of Detailed Specifications 41
9-03 Drawings, Samples and Tests 41
9-04 District Furnished Materials 42
9-05 Local Materials 42
9-06 Acquisition of Materials 42
9-07 Storage of Materials 42
9-08 Defective Materials 43
9-09 Trade Names and Alternatives 43
9-10 Certificates of Compliance 43
9-11 Salvage of Existing Materials 44

SECTION 10 LEGAL RELATIONS AND RESPONSIBILITY
10-01 Laws to be Observed 45
10-02 Permits and Licenses 45
10-03 Patents 45
10-04 Traffic Control 45
10-05 Public Convenience 46
10-06 Safety 47
10-07 Use of Explosives 48
10-08 Preservation of Property 48
10-09 Responsibility for Damage and Injury 49
10-10 Contractor's Responsibility for Work 49
10-11 Indemnity 50
10-12 Contractor's Insurance 50
10-13 Disposal of Material Outside the Right-of-way 52
10-14 Cooperation Between Contractors and District 52
10-15 Acceptance of Work 52
10-16 Guarantee of Work 52
10-17 Personal Liability 53
10-18 Protection of Survey Monuments 53
10-19 Sewer Service 53
10-20 Business License 53

SECTION 11 UTILITIES, OBSTRUCTIONS AND CONCRETE REMOVAL
11-01 Preservation of Property 55
11-02 Utilities 55
11-03 Utility Locations and Potholing 55
11-04 Utility Relocations and Suspension of Service 56

11-05 Alignment Changes 56
11-06 Removal of Obstructions 57
11-07 Changed Conditions 57
11-08 Disturbance to Trees 58
11-09 Removal of Concrete or Masonry Construction 59
11-10 Crossing Under Railroad, Highway or Utilities 60
11-11 Coordination of Work 60
11-12 Traffic Control 60
11-13 Storm Water Pollution Prevention Program 61

SECTION 12 REFERENCES TO STANDARD SPECIFICATIONS
12-01 State Standard Specifications 67
12-02 County Specifications 67

PART D - TECHNICAL CONSTRUCTION REQUIREMENTS

SECTION 13 EARTHWORK
13-01 Description 69
13-02 Encroachment Permits 69
13-03 Compaction 69
13-04 Materials 69
13-05 Trench Excavation and Backfill 70
13-06 Structural Excavation and Backfill 75
13-07 Embankment Construction 78
13-08 Temporary Paving 79

SECTION 14 SEWER PIPELINES
14-01 Description 81
14-02 Approved Sewer Pipe Materials 81
14-03 Pipe and Joint Materials 82
14-04 Backflow Prevention Relief Valve 87
14-05 Flexible Couplings for Pressure Lines 87
14-06 Valves 88
14-07 Protective Coatings 90
14-08 Fusion Epoxy Coating 90
14-09 Conventional Pipeline Installation 91
14-10 Trenchless Sewer Installation 94
14-11 Cleaning and Testing – Gravity Mains and Trunk Sewers 98
14-12 Side Sewer Testing 101
14-13 Testing of Force Mains 102

SECTION 15 DEMOLITION AND ABANDONMENT OF LINES AND STRUCTURES

15-01 Description 103
15-02 Safety 103
15-03 Salvage of Equipment and Materials 103
15-04 Methods and Equipment 103
15-05 Removal of Old Structures 103
15-06 Abandonment of Pipelines 103
15-07 Sewer Structures to be Abandoned 104
15-08 Disposal of Materials and Debris 104

SECTION 16 MANHOLES

16-01 Description 105
16-02 Precast Manholes 105
16-03 Manhole Channels 105
16-04 Precast Manhole Construction 105
16-05 Adjusting or Repairing Manholes 105
16-06 Temporary Covers and Plugs for Structures 106
16-07 Manhole Sealing 106
16-08 Manhole Testing 106

SECTION 17 STRUCTURAL CONCRETE

17-01 Description 109
17-02 Standards 109
17-03 Strength 109
17-04 Submittals 109
17-05 Cement 109
17-06 Admixtures 109
17-07 Aggregates 110
17-08 Selection of Proportions 110
17-09 Reinforcing Steel 110
17-10 Formwork 110
17-11 Reinforcing 111
17-12 Depth of Footings 111
17-13 Control of Water 111
17-14 Concrete Placement 111
17-15 Finishes on Concrete Surfaces 111
17-16 Curing 113
17-17 Concrete Deposited Under Water 113
17-18 Waterproofing 113
17-19 Drypack and Special High-Strength Non-Shrink Mortar 113
17-20 Alterations to Concrete Structure 114

17-21 Grout for Pipes and Anchors 114
17-22 Concrete Surface Repairs 114
17-23 Bonding New Concrete to Old 114
17-24 Slump Tests 114
17-25 Cylinder Testing 115
17-26 Inspection 115

SECTION 18 CASTINGS AND METAL FABRICATIONS
18-01 Description 117
18-02 Materials 117
18-03 Structural and Miscellaneous Steel 117
18-04 Bolts, Nuts and Washers 118
18-05 Galvanizing 118
18-06 Cast Iron Frames and Covers 118
18-07 Metal Railings 118
18-08 Aluminum Fabrications 119
18-09 Aluminum Isolation Coatings 119
18-10 Cutting with Torch 119
18-11 Painting 119
18-12 Inspection 119

SECTION 19 PAINTING 121
19-01 Description 121
19-02 Standards 121
19-03 Safety 121
19-04 Air Quality Standards 121
19-05 Epoxy Filler and Surfacer Compound 121
19-06 Coating Systems 122
19-07 Preparation of Surfaces 123
19-08 Paint Application 123
19-09 Painting Schedule 124
19-10 Cleanup 125

SECTION 20 SURFACE RESTORATION
20-01 Description 127
20-02 Air Quality Control Board Regulations 127
20-03 Pavement Restoration 127
20-04 Pavement Cutting 127
20-05 Pavement Grinding 127
20-06 Aggregate Base 128
20-07 Asphalt Concrete 128
20-08 Slurry Seal 128
20-09 Conformance to Existing Improvements 128

20-10 Raising Existing Castings to Grade 128
20-11 Restoration of Striping and Pavement Markers 129
20-12 Unpaved Travel Surfaces 129
20-13 Concrete Surfaces 129
20-14 Landscaped or Cultivated Areas 129

PART E - STANDARD DRAWINGS

Standard Manhole Frame and Cover ..... SD 1

Standard Sewer Manhole ..... SD 2.0

Manhole Repair to Raise Frame and Cover ..... SD 2.1

Raise Manhole Cover with HDPE Grade Rings ..... SD 2.2

Raise Manhole Cover with Concrete Grade Rings ..... SD 2.3

Drop Inlet Sewer Manhole Connection ..... SD 2.4

Standard 6-Inch Roding Inlet ..... SD 3

Typical Trench SECTION ..... SD 4

Typical Side Sewer Details ..... SD 5

Standard Cleanout and Backwater Prevention Device ..... SD 6

Backwater Check Valve and Shutoff System ..... SD 7

Main Sewer Protection Above Utility Crossing ..... SD 8

Main Sewer Protection Below Utility Crossing ..... SD 9

Side Sewer Protection Above Utility Crossing ..... SD 10

Side Sewer Protection Below Utility Crossing ..... SD 11

Side Sewer Reconstruction at Utility Crossing ..... SD 12

Standard Concrete Pipe Protection ..... SD 13

Force Main Valve ..... SD 14

Standard Redwood Check Board ..... SD 15

Standard Rip-Rap Installation ..... SD 16

Residential Sewage Pumping System ..... SD 17

Allowable Leakage Chart Water Test ..... SD 18

PART F – APPENDICES

APPENDIX I – CONFINED SPACE ENTRY PROGRAM

APPENDIX II – STANDARDS FOR THE DESIGN AND CONSTRUCTION OF SEWERS IN BAY MUD

SECTION 1 GENERAL INFORMATION

1-01 Introduction and Scope. These STANDARD SPECIFICATIONS shall apply to the design and construction of all public sewerage facilities and side sewers in the District, whether privately financed and constructed under permits issued by the District, or whether publicly financed and constructed under contract with the District.

The jurisdiction of the District includes the entire sewerage system and its appurtenances from the point of connection with the building plumbing to the outfall from the Sausalito-Marin City Sanitary District treatment plant. The side sewer between the main sewer and the building is privately owned and maintained, and the District has no ownership or maintenance responsibility therefor. In general, the service area of the District covers the incorporated area within the District's jurisdiction, including Marin City. Maps showing the existing District boundaries and the planned future service area boundaries are available for inspection at the District office.

Special provisions, specifications addenda and/or notes on the plans shall be provided when deemed necessary by the District Manager and/or District Engineer and shall be considered as part of the specifications for the work.

1-02 District Ordinances. The Ordinances of the District comprise the rules and regulations of the District with respect to the construction and use of sanitary sewerage facilities. In general, the Ordinances provides the authority of the District Manager, District Engineer and District Construction Inspectors, adopts the "Standard Specifications," provides regulations for side sewer construction and for the use and construction of public sewers, fixes annexation, plan checking, and permit and inspection fees, and provides for the establishment of uniform connection charges. A knowledge of the Ordinance provisions and policies is essential to those proposing to design or construct sewerage facilities under permit in the District. Copies of pertinent Ordinance sections may be obtained at the District office upon request.

1-03 Annexation Policy. The annexation policy of the District requires the consideration of service to any property within the planned ultimate service area and that all properties served must annex to the District. The annexation fees charged are intended to cover the District's costs for legal, engineering and administrative services in processing the annexation. Only complete properties of legal record can be annexed. The District has established annexation procedure and further information can be gained by contacting the District office.

1-04 Downstream Capacity Policy. Where the District determines that downstream sewers lack sufficient capacity to accept wastewater flows from a proposed development or facility, the District may require the applicant to upsize the downstream sewer as necessary to accommodate the future flows or contribute funds toward a future upsizing by the District.

1-05 Right-of-Way Policy. The right-of-way policy requires that all public sewerage facilities be located in easements or rights-of-way granted or dedicated for sewers and public use. In the case of public streets, further dedication is not necessary unless specifically required. All new easements must be granted directly to the District as sewer easements by separate deed. Unless otherwise specifically permitted or required by the District Manager or District Engineer, all easements shall be fifteen (15) feet in width and the easement shall be centered on the sewer line. Ten (10) foot easements may be provided under special circumstances only if specifically approved by the District Manager. Easements shall be provided for sewers and granted to the District in all cases where future extensions of sewer lines will be required on the property being sewered.

1-06 Condemnation Policy. When a public sewer must pass through private property and a right-of-way cannot be obtained through negotiation with the property owner, the District may, under certain conditions, order condemnation of the required easement. If condemnation by the District is desired, the following will be required:

A. Requirements - Submit complete construction plans, a detailed easement plat, and a letter to the District Board of Directors explaining the situation and stating that all reasonable means to acquire the easement through normal procedures have been exhausted; no agreement could be reached; and requesting the District's assistance in acquiring the easement.

B. Condemnation Ordered - If condemnation is ordered by the District, a duplicate tracing of the easement map shall be submitted showing the entire easement, any required temporary working easements, all affected properties, and a description of the easement and temporary working easement including correct and complete names and addresses of all vested owners of the property shall be furnished.

C. Costs of Condemnation - All costs of the condemnation shall be borne by the applicant and he shall deposit with the District, in advance, the estimated cost of the easement and all legal, appraisal, engineering, administrative and other costs associated with the condemnation. The amount of the deposit shall be determined by the District Engineer.

1-07 Engineering Policy. The engineering policy of the District requires strict compliance with the Civil and Professional Engineers Act of the California Business and Professions Code. All engineering plans, specifications, reports or documents shall be prepared by a registered civil engineer, or by a subordinate employee under his direction, and shall be signed by him and stamped with his seal to indicate his responsibility for them. It shall be the Job Engineer's responsibility to review any proposed sewer system, extension and/or existing system change with the District Manager or District Engineer, prior to engineering or design work, to determine any special requirements or whether the proposal is permissible. Approval of preliminary or final plans by the District does not in any way relieve the Job Engineer of the Permittee of his responsibility to meet all requirements of the District. The plans and specifications for any job can be revised or supplemented by the District at any time it is

determined that the full requirements of the District have not been met. The Job Engineer shall review such changes and prepare the necessary revisions to the plans. Any cost of revisions or additions required by the District shall be paid for by the Permittee.

1-08 Environment Impact Report Regulations. The District Board of Directors has adopted "Local Guidelines for Implementation of the California Environmental Quality Act of 1970" and amendments thereto. Under these regulations, persons proposing to obtain permits for sewer construction may be required to prepare or finance the preparation of certain environmental impact studies and documents concerning the project. Persons planning projects involving extension of sewer mains are advised to contact the District's staff early in their planning process to determine the appropriate lead agency and exact District Environmental Impact Report requirements.

SECTION 2 DEFINITIONS AND TERMS

2-01 Definitions and Terms. Whenever in these specifications, or in any documents or instruments where these specifications govern, the following terms, abbreviations or definitions are used, the intent and meaning shall be interpreted as follows:

Acceptance - Formal acceptance by action of the District Board of an entire contract or agreement or work done under permit which has been completed in all respects in accordance with the plans and specifications and any modifications thereof previously approved.

Annexation - The process of inclusion of property into District boundaries by proper legal procedures. Annexations must be processed through the Local Agency Formation Commission.

Applicant - The person making application for a permit and who shall be the occupant and/or owner of his/her/their authorized representative of the premises to be served by the sewer for which a permit is requested.

Building - Any structure used for human habitation or a place of business, recreation or other purpose.

Building Sewer - That portion of any sewer beginning at a point two (2) feet outside the foundation line of any building and running to the property line, street right-of-way or sewer easement right-of-way line or to a private sewage disposal system.

Building Sewer Permit - The written authorization from the District for the installation of a side sewer at a specific location and under specific conditions of the permit.

City - Any incorporated municipality lying partly or entirely within the District.

Contractor or Side Sewer Contractor - Any contractor licensed by the State of California to enter into contracts for and to perform the work of installing sewers within the District, or the owner of private property doing his own house sewer work on his private property only.

County - The County of Marin, State of California.

County Standard Specifications - The Standard Specifications, Cities & County of Marin, Department of Public Works, dated June 1992 and subsequent revisions.

Definition of Words - Whenever, in these specifications, the words directed, required, permitted, ordered, designated or words of like import are used, they shall be understood to mean the direction, requirement, permission, order or designation of the District Manager or

District Engineer. Similarly, the words approved, acceptable, satisfactory, shall mean approved by, acceptable to, or satisfactory to the District Manager or District Engineer.

Developer - A private party installing sanitary sewer facilities.

District - The Sausalito-Marin City Sanitary District, which collects, treats and disposes of all wastewater in the District, as represented by the District Board, District Manager or District Engineer.

District Board - The governing body of the District.

District Engineer - The Engineer of the District, licensed by the State of California as a Civil Engineer, acting either directly or through authorized agents.

District Inspector - The engineering or technical inspector or inspectors duly authorized or appointed by the District Manager and responsible for the particular duties delegated to him/her or them.

District Manager - The Manager of the District acting either directly or through authorized agents.

Fixture Units - The fixture unit load values for drainage piping as computed from tables of the current Uniform Plumbing Code.

Job Engineer - The engineer, licensed by the State of California as a Civil Engineer, under whose direction plans, profiles and details for the work are prepared and submitted to the District for review and approval. The Job Engineer shall provide all field surveys, construction staking, confirm field changes and prepare record drawings.

Lateral Sewer - That portion of the side sewer lying within a street or sewer right-of-way. (Normally that portion of the side sewer between the main sewer and property line.) The lateral sewer is privately owned and maintained.

Main Sewer - A public sewer which has been or is being constructed to accommodate more than one side sewer. (Normally eight (8) inches in diameter or larger.) The District will accept and maintain main sewers which are constructed to these standards and installed under a District public sewer extension permit with District supervision and inspection.

Other Specifications - Whenever in these specifications other specifications are mentioned, it shall be understood that the materials or methods mentioned therewith shall conform to all requirements of the latest revision of the specifications so mentioned.

Outside Sewer - A sanitary sewer beyond the limits of the Sanitary District not subject to the control or jurisdiction of the District.

Owner - In the case of District projects, the term owner shall mean the Sausalito-Marin City Sanitary District. In the case of private projects, the term owner shall mean that person who is doing or having work done under permit or agreement with the District.

Permit - Any written authorization required for the installation of any sewer line or sewage works.

Permittee - The person to whom a public sewer permit or building sewer permit is issued.

Person - Any person, firm, company, corporation, association or public agency.

Plans - Construction plans, sewer plans and profiles, cross sections, detailed drawings, etc., or reproductions thereof, approved or to be approved by the District, which show the location, character, dimensions and details for the work to be done, and which constitute a supplement to these specifications.

Plumbing System - All plumbing fixtures and traps, or soil, wastes, special waste and vent pipes within a building to a point two (2) feet outside the building foundation thereof.

Private Construction or Private Projects - Projects involving construction of sewerage facilities, other than District projects, which are to be performed by the Permittee and connected to the District sewerage system. Sewers to be accepted by the District shall be constructed under a Public Sewer Extension Permit. Side sewers, which are not accepted by the District, shall be constructed under a Building Sewer Permit with the District.

Private Sewer - A sewer serving an independent sewage disposal system not connected with a public sewer and which accommodates one or more buildings or industries.

Public Sewer Extension Permit - The written authorization from the District for the installation of a public sewer main at a specific location and under specific conditions of the permit.

Record Drawings (As-Built Drawings) - Reproducible plans signed and dated by the Job Engineer and District representative, indicating that the plans have been reviewed and revised, if necessary, to accurately show all elevations and construction details which were actually built.

Right-of-Way - All land or interest therein which by deed, conveyance, agreement, easement, dedication, usage or process of law is reserved for or dedicated to the use of the general public, within which the District shall have the right to install and maintain public sewerage facilities.

Section - Any reference to a section which is not accompanied by further reference refers to a section or sections of these specifications.

Sewage - A combination of water-carried wastes from residences, business buildings, institutions and industrial establishments.

Sewage Works - All facilities for collecting, pumping, treating and disposing of sewage.

Side Sewer - The side sewer begins at its point of connection with the main sewer and terminates at its point of connection to the sanitary or waste plumbing. The point of connection to the sanitary or waste plumbing shall be two (2) feet or less from the building foundation at the point where the plumbing first extends outside the foundation (minimum four (4) inches inside diameter). The side sewer is privately owned and maintained, including the lateral sewer, which links the sanitary or waste plumbing of a house or other building with the main sewer. All side sewers shall have a "clean out safety relief valve" or a "Contra Costa overflow valve".

Soils Engineer - Any soils engineering firm or authorized representative of such a firm which is retained by the owner of a project for the purpose of designing, testing, or controlling grading, installation of pavements, or trench backfill, and/or means to handle subsurface water and supplying to the District reports on the same. The Permittee shall pay all costs for the soils engineer.

Special Provisions - Special Provisions are specific clauses of the Specifications for a specific job which set forth conditions or requirements peculiar to the project under consideration and covering work or materials involved in the proposal and estimate but not satisfactorily covered by these Standard Specifications.

Specifications - The directions, provisions, and requirements contained herein as supplemented by such Special Provisions as may be necessary pertaining to the method and manner performing the work or to the quantities and qualities of materials to be furnished under the contract or permit.

Standard Drawings - The drawings of structures or devices commonly used on District work designated by the District as Standard Drawings at the time a District contract or agreement is entered into or permit is issued.

Standard Specifications - The Standard Specifications of the Sausalito-Marin City Sanitary District as contained herein and all subsequent additions, deletions or revisions.

State Standard Specifications - The Standard Specifications of the State of California, Department of Public Works, Division of Highways, current issue. Where the terms "State" or "Engineer" are used in the State Standard Specifications, they shall be considered as meaning the "District" or "District Engineer" as defined hereinabove.

Streets or Roads - Any public highway, road, street, avenue, alley, way, easement or right-of-way.

Surety - Any firm or corporation executing a surety bond or bonds payable to the District, securing the performance of the contract or permit either in whole or in part.

Traveled Way - That portion of the roadway for the movement of vehicles, exclusive of shoulders and auxiliary lanes.

Uniform Plumbing Code - The Uniform Plumbing Code adopted by the International Association of Plumbing and Mechanical Officials, current edition.

Work - All the work to be done under the District contract, or permit, in accordance with the plans, specifications and/or Special Provisions, and/or permit conditions.

2-02 Abbreviations. The following abbreviations shall have the designated meanings.

ACP	-	Asbestos Cement Pipe
AC	-	Asphalt Concrete
AAN	-	American Association of Nurserymen
AASHO	-	American Association of State Highway Officials
ACI	-	American Concrete Institute
AREA	-	American Railway Engineering Association
ASA	-	American Standards Association
ASCE	-	American Society of Civil Engineers
ASME	-	American Society of Mechanical Engineers
ASTM	-	American Society for Testing Materials
AWPA	-	American Wood Preserver's Association
AWS	-	American Welding Society
AWWA	-	American Water Works Association
BCDC	-	Bay Conservation and Development Commission
CDF	-	Controlled Density Fill
CIP	-	Cast Iron Pipe
CLP	-	Concrete Lined Steel Cylinder Pipe
CL & CP	-	Concrete Lined and Coated Steel Cylinder Pipe
CMP	-	Corrugated Metal Pipe
Drop MH	-	Drop Manhole
Fed. Spec.	-	Federal Specifications
FL	-	Flow Line
IAPMO	-	International Association of Plumbing and Mechanical Officials
ISA	-	International Shadetree Association
Inv. El.	-	Invert Elevation
LAFCo	-	Local Agency Formation Commission
LH	-	Lamphole
MH	-	Manhole
NEMA	-	National Electrical Manufacturers Association
PCC	-	Portland Cement Concrete
PE	-	Polyethylene

PMP	-	Perforated Metal Pipe
PVC	-	Polyvinyl Chloride
RCP	-	Reinforced Concrete Pipe
RH	-	Rodhole
RI	-	Rodding Inlet
RPMP	-	Reinforced Plastic Mortar Pipe
S	-	Pipe Slope
SDR	-	Standard Dimension Ratio
SMCSD	-	Sausalito-Marin City Sanitary District
St. P.	-	Steel Pipe
Sta.	-	Survey Station
URB	-	Untreated Rock Base (Aggregate Base)
VCP	-	Vitrified Clay Pipe
WPCF	-	Water Pollution Control Federation

SECTION 3 DESIGN CALCULATIONS AND PLAN PREPARATION

3-01 Design Calculations. When requested to do so by the District, the Job Engineer shall submit design calculations for District review and approval. Design calculations shall be submitted in duplicate and shall be in a neat, acceptable form and shall indicate the date, signature of the Job Engineer and his stamp with his State of California registration number and expiration date.

Calculations for sewers shall be presented in tabular form and shall include the following information for each section of sewer: Terminal manhole designation, ground elevations at terminal manholes, incremental and cumulative tributary population, incremental average and maximum domestic sewage flow, incremental infiltration allowance, cumulative design flow, invert elevations of terminal manholes, length of sewer run, and sewer size, slope, capacity and velocity. Design calculation for pumping stations shall include soils data, structural design calculations, hydraulic calculations including the basis for average and peak flows, calculations for wet well volume, curves indicating force main characteristics, and individual and combined pump head capacity curves.

All calculations shall be accompanied by a small scale map showing and identifying proposed sewerage facilities and tributary areas, etc.

3-02 Size of Plans and Data Required. Sheet sizes for plans for all sanitary sewerage facilities shall be 22 inches by 34 inches, unless otherwise specifically approved in advance by the District, and the plans shall include as a minimum the following information and data:

A. General - The plans shall show the name of the project, subdivision, and each sheet shall bear the Job Engineer's signature and registration stamp with expiration date. Each map and plan sheet shall have a north arrow, appropriate scale or scales and date of preparation indicated thereon.

B. Sewer Plans - The sewer plans shall show the true horizontal relationship between the proposed sewer improvements and the existing and/or proposed field conditions, including all existing or proposed utilities and other facilities in accordance with available information (see Section 11-02). Plans shall include sewer line sizes and designations and shall show all structures and their respective numbers, the property lines and corners adjacent to the sewer alignment, laterals and ties to property corners, all necessary required stationing, horizontal curve data and street names. Horizontal scale must be 20 feet to the inch with a vertical scale of 5 feet to the inch unless another scale is specifically permitted by the District.

C. Sewer Profiles - The sewer profiles shall show the vertical relationship between the sewer line invert and the ground surface at the time of sewer construction and the finished ground and/or paving surface. The sewer line size, pipe type and pipe class shall be shown between each pair of consecutive structures on the profiles. Sewer profiles shall also show all existing and/or proposed utilities and/or other facilities in accordance with available

information (see Section 11-02), which cross the alignment of the sewer and shall accurately indicate clearance when less than twelve (12) inches. Sewer profiles must be prepared at the same horizontal scale as the plans and a vertical scale of five (5) feet to the inch, unless another scale is specifically permitted by the District.

D. Easements - All existing and proposed easements and rights-of-way shall be shown on the plans.

E. Vicinity Map - A small scale vicinity map showing the location of the development within the town or city, together with the streets and downstream sewer, shall be shown on the first sheet of the plans.

F. Location Map - A location map at a scale of 100 feet to the inch shall be included on the first sheet of the plans showing the entire development, the overall sewer layout and appropriately indexing each plan sheet.

G. Line Stationing - Each sewer line with a separate designation shall be stationed continuously upgrade from 0+00 at its point of connection to another line.

H. Ties to Existing System - Horizontal and vertical ties to the existing District sewerage system shall be indicated on the plans.

I. Structure Numbers - Manholes, rodding inlets, and all other sewer structures shall be numbered or stationed consecutively upgrade by type of structure. The structure number shall appear on the plans and profiles whenever the structure is shown or referred to.

J. Side Sewer Locations and Elevations - All side sewers or laterals shall be shown on the plans with ties given to nearby property corners. The elevation of the lateral at the property line shall be shown on the plans and staked in the field by the Job Engineer.

Where properties are fronting on a cul-de-sac, the laterals for these properties shall be connected to a manhole. Normally, the lateral shall be shown to a point ten (10) feet from the lower lot corner at the property line on hillside lots (3%+ slope), and to the approximate center of the lot in relatively level terrain. The Job Engineer may locate laterals to fit building conditions, but the plans must show proper ties, and the completed lateral must be permanently marked with an "S" on the curb or a stake and accurately shown on the record drawings.

K. Elevation Datum - The elevation datum used shall be USC & GS mean sea level (National Geodetic Vertical Datum NGVD). The plans shall include a note indicating the elevation datum and describing the location of one or more benchmarks in the area of the work.

L. Standard Notes - In addition to any other notes which may be appropriate or required, the following notes shall be included on all plans:

1. "All sewer construction shall be in accordance with the Sausalito-Marin City Sanitary District Standard Specifications and Drawings."

2. "The Contractor shall notify the District 48 hours prior to starting any sewer work."

3. "For any work in a public street, the Contractor shall obtain an encroachment permit from the agency having jurisdiction."

4. "The locations of utilities shown on these plans are approximate only, and it is the Contractor's responsibility to verify locations and depths with appropriate agencies or by potholing. The Contractor shall call USA Underground Service Alert at least 72 hours prior to commencing work."

5. "The Contractor shall pothole all underground utilities and sewers prior to any trenching operation.

6. "The Contractor shall notify the District immediately of any conflict between sewers and other underground facilities."

7. "The Contractor shall shore all excavations in accordance with applicable safety orders."

8. "All sewer laterals shall be a minimum 4 inches inside diameter and shall have a minimum slope of 1.0% and minimum depth of cover at the property line of 3.0 feet (measured from the top of curb), unless otherwise noted on these plans."

3-03 Rights-of-Way. Rights-of-way define and establish the rights for the District to maintain a sewer facility in the location designated by the Job Engineer (see Section 1-05). When main sewers are to be installed outside of public street rights-of-way in subdivisions, the required easements shall be shown on the subdivision final map and shall be granted to the District in a separate deed of easement. Outside of subdivisions, when sewers are to be installed on private property, an easement must be granted to the District and the easement description and required easement map shall be provided to the District by the Job Engineer, along with the name and address of the property owner or owners of record. Unless otherwise specifically approved by the District, public sewer permits will not be approved nor will any work be permitted to proceed until the District receives, approves and accepts and records all required easements.

A. Easement Descriptions - Easement descriptions shall provide legal metes and bounds description of all easements to be granted. The preamble of the easement description shall read as follows:

"AN EASEMENT for the construction and maintenance of sanitary sewer facilities and appurtenances, together with the right of ingress and egress, over, on or under the following described property:"

B. Easement Maps - The easement map shall show the entire parcel over which the easement is granted, and all necessary survey ties, courses and distances, the point of beginning of the easement description, the last names of each grantor, the name of the sewer main extension involved, a north arrow, map scale, and the Job Engineer's signature and registration stamp with expiration date. Bearings and distances of easement courses shown shall conform to those given in the easement description. Two (2) black line prints of the easement map shall be submitted (for each grantor involved).

C. Easement Deeds - After approval of the required easement map and description, the Permittee shall prepare the necessary easement deed on an appropriate form and furnish the District with a properly signed and notarized deed of easement for recordation by the District.

3-04 Easements for Future Extensions. Easements shall be granted to the District through the property to serve the upstream property in all cases where future extensions of sewer lines could be required beyond the property being sewered. Such easements shall be included on the construction plans where there is any doubt as to the ability to properly serve the ultimate service area.

3-05 Flood Control Approval. In the event that a proposed sewer is to cross a creek, storm water channel, conduit, structure or drainage course under the jurisdiction of the Marin County Flood Control and Water Conservation District, a detailed large scale profile of the crossing shall be incorporated in the plans with approval of the Flood Control District, County and/ or city of jurisdiction prior to approval of the plans by the District.

3-06 Soils Investigation. Due to the inherent hazards involved in excavation, trenching, and pipe laying in certain common soil formations within the District, the right is reserved to required geological investigation and report prior to the approval of construction plans. In general, locations on steep side hills, locations in areas of established instability, locations in areas of bay mud or filled marshland, spring or seepage areas, or areas where concentrated or unusual development exists or is planned, shall be investigated and construction controlled by the recommendations contained in the Soils Engineer's report. The costs of all soils investigations shall be paid for by the Permittee.

3-07 Construction Permits. The Permittee shall be responsible for securing all necessary construction permits. Such permits include, but are not necessarily limited to, permits from BCDC, the U.S. Army Corps of Engineers, State Department of Fish and Game, Cal/OSHA, Division of Industrial Relations, street or railroad encroachment permits, etc.

SECTION 4 DESIGN STANDARDS

4-01 Design Criteria. The following criteria for the design of gravity sewers within the jurisdiction of the Sausalito-Marin City Sanitary District is hereby established.

A. Population Density - Population densities for determining the ultimate tributary population shall be based on actual count, current General Plan of the agency exercising jurisdiction, or based upon the character of proposed development, whichever is the greatest.

B. Average Single Family Unit - The average single family unit shall be taken as 2.5 persons per residence.

C. Per Capita Domestic Sewage Flow - The average per capita dry weather domestic sewage flow shall be taken as eighty (80) gallons per day.

D. Design Flows - Areas Containing less than 2,000 Persons - In the design of sewers for residential tributary areas containing 2,000 persons or less, the unit design flow used shall be 400 gallons per capita per day. This factor includes appropriate allowance for storm water infiltration.

E. Design Flows - Areas Containing More Than 2,000 Persons - For tributary areas containing more than 2,000 persons, the total design flow shall be determined by multiplying the average dry weather sewage flow times the ratio of peak flow to average flow and adding an appropriate allowance for storm water infiltration.

1. Ratio of Peak to Average Sewage Flow - The ratio of peak to average dry weather sewage flow is a function of the tributary population, and the values tabulated below shall be used.

Population Range	Rate of Peak to Average Dry Weather Sewage Flow
2,000 - 5,000	2.5
5,000 - 7,000	2.3
7,000 - 9,000	2.2
9,000 - 13,000	2.1
13,000 - 18,000	2.0

2. Storm Water Infiltration - Investigation has shown that areas of the existing sewerage system constructed prior to 1962 contribute significantly higher amounts of storm water infiltration than can be expected from more recently constructed sewers. Accordingly, the following allowances shall be made for storm water infiltration flows:

Areas sewered prior to 1962 - 6,000 gallons per acre/day

Areas sewered after 1962 - 2,500 gallons per acre/day

Areas sewered after 1975 - 1,000 gallons per acre/day

F. Commercial or Industrial Flows - Unit design flows used for commercial or industrial areas shall be used on the type of existing or proposed development and shall be determined by special study subject to the review and approval of the District.

G. Manning Formula - The diameter of gravity sewers shall be determined by use of the Manning formula, using a roughness coefficient, "n", of 0.013 or the pipe manufacturer's recommendation, whichever is greater.

H. Special Design Problems - Special design problems involving siphons, pumps, pump stations, force mains, non-residential connections, or other unusual features, require individual study and approval by the District Engineer.

I. References - Reference is made to WPCF and ASCE manuals, and to Minimum Design Standards of the Federal Housing Administration (FHA-G-4518.1).

4-02 Prohibited Wastes.

A. Prohibited Materials - It shall be unlawful for any person to connect any drain into the public sewer system. Dumping of garbage or septic tank sludge into manholes or sewers is strictly prohibited as set forth in District Ordinance 112. It shall be unlawful to discharge any industrial waste or any solid or semisolid or liquid substances resulting from any industrial manufacturing or commercial process or from any garage, service station or wash rack, into any sewer in the District without first having obtained a permit to do so from the Sanitary District.

Except as hereinafter provided, no person shall discharge or cause to be discharged any of the following described waters or wastes to any public sewer.

1. Any solid or viscous pollutants in amounts which will cause obstruction to the flow in the system, or which will require unusual attention or expense to convey and/or treat. In no case shall there be discharge of any solid material not capable of passing through a 3/8 inch mesh screen.

2. Pollutants which create a fire or explosive hazard in the system, including, but not limited to, wastestreams with a closed-cup flashpoint of less than 140°F (60°C) using the test methods specified in 40 CFR 261.21.

3. Heated discharges in amounts which will inhibit biological activity in the treatment facility resulting in interference. Heated discharges in such quantities that the

temperature at the treatment plant exceeds 104•F (40•C), or which pose a hazard to District personnel.

4. Any discharge which has been diluted as a partial or complete substitute for treatment to achieve compliance with this Ordinance, the user's waste discharge permit, or the National Categorical Standards.

5. Any discharge of hazardous waste, as defined by Title 22 of the California Code of Regulations, without the written approval of the District.

6. Any discharge which causes noxious or malodorous gases at or near the District's facilities or which otherwise creates a public nuisance.

7. Pollutants which result in the presence of toxic gases, fumes, or vapors within the District's facilities in a quantity that endangers the health or safety of District's personnel.

8. Any storm water, surface water, groundwater, roof runoff or subsurface drainage, except in cases of discharge of contaminated groundwater in accordance with Section 8.

9. Any radioactive wastes, except as allowed under the "California Radiation Control Regulations", CCR Title 23 sec 30100 et seq.

10. Any discharge of any pollutant, including oxygen demanding pollutants (BOD, etc.), released at a flow rate and/or concentration which will cause interference with the system.

11. Any discharge containing petroleum oil, nonbiodegradable cutting oil, or products of mineral oil origin in amounts that, alone or in conjunction with other discharges, will cause interference or pass-through.

12. Any discharge which, alone or in conjunction with a discharge or discharges from other source, will compromise the use of District's treated wastewater for any adopted reclamation use.

13. Pollutants which will cause corrosive structural damage to the system.

14. Substances containing greater than five percent copper by weight, added to control roots or for any other purpose.

B. Interceptors Required - Grease, oil, and sand interceptors shall be provided when, in the opinion of the District, they are necessary for the proper handling of liquid wastes, containing grease in excessive amounts, or any flammable wastes, sand and other harmful ingredients; except that such interceptors shall not be required for buildings used for residential purposes. All interceptors shall be of a type and capacity approved by the District and shall be so located as to be readily and easily accessible for cleaning and inspection.

C. Maintenance of Interceptors - All grease, oil and sand interceptors shall be maintained by the Owner, at his expense, in continuously efficient operation at all times.

D. Swimming Pools - It shall be unlawful for any person to discharge the contents of a swimming pool into a sanitary sewer except in the manner specified herein. The size of pipe carrying discharge water shall not be larger than two (2) inches and shall not be under a head to exceed twenty (20) feet. If the water is discharged by pumping, the rate of flow shall not exceed 50 gallons per minute. Each swimming pool discharging to a sanitary sewer shall be equipped with an approved separator to preclude any possibility of a backflow of sewage into the swimming pool or piping system.

4-03 Sewer Pipes.

A. Pipe Materials - All main sewer and lateral sewer pipes shall be PVC plastic pipe, polyethylene pipe, ductile iron pipe, cast iron pipe, or reinforced concrete (large diameter - special situations), unless otherwise specifically required or approved by the District. Selection of the pipe type for a given project shall be made by the Job Engineer, subject to the approval of and final selection by the District. The type of pipe used for side sewer installations shall conform to the "Approved Side Sewer Pipe Materials List," on file in the District office. The type of pipe used for force mains shall be PVC plastic pipe, polyethylene pipe, cast iron pipe or concrete steel cylinder pipe, as specifically approved for the particular project by the District. Special pipe and/or design provisions may be required by the District.

B. Minimum Pipe Sizes - The minimum pipe size for main sewers shall be eight (8) inches in diameter unless otherwise specifically allowed by the District. The minimum pipe size for side sewers shall be four (4) inches or the same size as the building plumbing stub, whichever is greater. Where more than 150 fixture units are to be connected, the side sewer shall have a six (6) inch minimum diameter. When more than one building sewer is allowed to be connected to a single side sewer, the side sewer from the point of intersection of one or more building sewers to the main sewer shall be not less than six (6) inches in diameter.

C. Minimum Slope - Main Sewers - The slope of the sewer shall be such that the velocity of flow in the pipe when flowing full shall be equal to or greater than two (2) feet per second. The minimum acceptable slopes for various main sewer sizes are tabulated below. For construction in filled marshland or bay mud, or other areas subject to possible differential settlement, the District may specify acceptable minimum slopes greater than those shown.

Pipe Size In Inches	Minimum Slope Ratio in Feet per Foot
6	0.006
8	0.004
10	0.0028

12	0.0022
15	0.0015

Pipe Size In Inches	Minimum Slope Ratio in Feet per Foot
18	0.0012
21	0.0010
24	0.0008

D. Minimum Slope - Side Sewers - The minimum slope for four (4) inch diameter side sewers shall be 1.0 feet per 100 feet (1.0%). The minimum slope for side sewers greater than four (4) inches shall be 0.7 feet per 100 feet (0.7%).

E. Steep Slopes - For sewers installed in areas with steep ground slopes, special design features may be required. Depending upon conditions of the specific installation, such items as check dams, rip-rap, trench dams, special anchorage or special pipe materials may be required by the District.

F. Minimum Pipe Cover - The following minimum pipe covers shall be attained in design and construction of sanitary sewers. If certain conditions exist which make it impractical to meet the minimum cover and clearance requirements, special pipe, bedding, encasement, rip-rap, and/or backfill will be required as directed by the District Engineer.

1. Main Sewers - The minimum pipe cover for main sewers within street rights-of-way shall be 3.0 feet. The minimum cover for mains within easements or other rights-of-way not expected to become streets shall be 3.5 feet. Lesser pipe cover may be approved by the District with use of special pipe materials or concrete slab protection.

2. Side Sewers - That portion of a side sewer within a street right-of-way (lateral sewer) shall have a minimum cover of 3.0 feet. The minimum cover for side sewers from the property line to the building drain (building sewer) shall be three (3) feet. However, when the cover over the side sewer is less than twenty-four (24) inches, special pipe, bedding and/or concrete encasement may be required by the District.

G. Pipe Strengths and Maximum Depths - The minimum pipe strengths and classes given as standard in these specifications (see Sections 14-02 and 14-03) and in the "Approved Side Sewer Pipe Materials List," are based upon the attainment of standard bedding conditions (see Section 13-02), maximum allowable trench widths (see Section 13-02B), and upon the assumption of average pipe depths (depths up to 12 feet). Where, for any reason, the standard bedding conditions cannot be attained, or the maximum allowable trench width is exceeded, or the pipe depth is greater than average, special pipe, bedding, backfill and/or encasement may be required as directed by the District. Where pipe depths or other known conditions required pipe strengths other than those specified as standard, the Job Engineer shall indicate the required pipe classes on the plans.

H. Pipe Clearance - All sewer pipes and structures shall be designed and contracted to have a minimum of ten (10) feet from domestic water lines and twenty-four (24) inches clearance from all other utilities and/or improvements, unless a special approval is received from the District.

I. Horizontal and Vertical Curves - Horizontal curves may be used on curved streets when the alignment can be kept concentric with street improvements and when pipe deflection requirements can be met. Vertical curves may be used in hilly terrain, when permitted by the District, in order to reduce the number of required manholes. The deflection in the joint between any two successive pipe sections shall not exceed 70% of the maximum deflection as recommended in writing by the pipe manufacturer. Shorter pipe joint lengths may be used for vertical or horizontal curves with approval by the District.

J. Sewer Connections to Existing System - Connection of new main sewers to the existing sewer system shall be made at existing manholes or by constructing a new manhole at the point of connection. The elevation of new sewer mains or laterals connecting to a manhole shall be set so that the pipe crowns match. Side sewer connections to existing main sewers shall be accomplished by connecting to wye or tee branches or laterals where they exist, by installing a spliced-in-wye, by installing a Tap-Tite drilled connection or by connecting to an existing manhole. Inserta tee lateral connection may not be used on sewer mains with a diameter less than 12 inches. Side sewers eight (8) inches and larger shall be connected with manholes only.

K. Individual Sewage Ejector Pumps - Special application must be made for installation of an individual sewage pump where gravity service is not feasible. All pumping systems shall be installed in accordance with all applicable codes. The District will inspect the pump station and pressure line from the sewage pump to the point of connection to the District sewer system.

The gravity discharge line from the building outlet to the sewage pump holding tank shall be gravity flow. When the distance between the building outlet and the sewage pump holding tank is greater than five (5) feet, the District shall have jurisdiction, and the gravity line shall be inspected by the District Inspector.

The holding tank, pumps and electrical work are under the jurisdiction of the District.

L. Sewer Alignment - Where sewer lines are to be installed within street rights-of-way, they shall, wherever practical, be designed and installed five (5) feet off the center line of the existing or future street (usually the side opposite the water line). In streets in hilly areas, the sewer shall be installed on the uphill side of the street where possible. Where practical, all sewer lines within easements shall be designed and installed with not less than five (5) feet between the center line of sewer and the edge of the easement. All sewer lines and structures shall be designed and installed well in the clear of all other improvements and utilities (see "Pipe Clearance" above).

M. Sampling Manhole - Dischargers of non-domestic wastes may be required to install a sampling manhole at the location where the lateral sewer connects to the sewer main as designated by the District.

N. Manhole Accessibility - Insofar as possible, all manholes shall be situated so that they are accessible to the District's cleaning vehicles.

O. Sewer Pipe Stubs - Sewer pipe stubs shall be designed and installed in all manholes from which future sewer line extensions are anticipated. Pipe stubs shall be minimum eight (8) inches in size or as directed by the District and shall be of an approved type of pipe. Stubs shall protrude a minimum of five (5) feet outside of the manhole base and shall be channeled as though a regular sewer line within the manhole. A rubber coupling on the outside of the pipe shall be encased in the manhole base to prevent leakage. The outboard end of stubs shall be a standard bell joint end and shall be plugged with a standard watertight plug and cap, as supplied by the pipe manufacturer.

P. Sewer Line Extensions - In all new streets, where sewer lines are expected to be extended, the sewer line shall be designed and installed to the end of the proposed street improvements, prior to street construction. The sewer extension shall terminate with a manhole, at a location which will minimize the amount of pavement to be disturbed by future sewer extensions.

Q. Sewers to be Installed in Existing Improved Streets - Where sewers are being designed for installation in existing City and/or County streets, the Job Engineer shall submit the plans for the proposed work to the City and/or County Public Works Department for location and encroachment permit approval.

R. Sewers to be Installed in or Across Utility, Highway, Railroad Rights-of-Way or Creeks - Where sewers are to be constructed across or within utility, railroad rights-of-way, or creeks requiring tunnels, bores and/or special pipe, the special pipe or construction shall extend the full length of the sewer line within the particular right-of-way. The Permittee shall secure all necessary encroachment permits or joint use permits for utility, highway, railroad rights-of-way or creek crossings.

S. Separate Side Sewers Required - Each individual building site shall be connected to the main sewer with a separate side sewer. Combined side sewers for buildings under the same ownership will be permitted only on specific approval of the District when the property is not likely to be subdivided in the future. A common side sewer may be used for connected buildings (i.e., buildings with common walls or multi-story buildings) under different ownership where the Covenants, Conditions and Restrictions (CC&R's) provide that the homeowners' association maintains all common laterals.

T. Side Sewer Connections - Side sewers shall be installed into manholes where possible. Side sewers shall connect near the bottom of the manhole, matching pipe crowns, unless a formal external drop connection is provided.

U. Side Sewer Cleanouts Required - Cleanouts shall be installed in the side sewer as provided in the Uniform Plumbing Code. The cleanout riser shall be equal in size to the side sewer (see Drawing SD-5).

Cleanouts shall be installed at the following locations:

1. At the junction of the house plumbing and side sewer two (2) feet outside the building.

2. At each bend or change in direction of the side sewer 45• •or over.

3. Where a run of pipe without bends exceeds ninety (90) feet.

Note: All cleanouts, except the blowoff cleanout, shall be brought to grade, properly capped and completely watertight.

V. Backwater Prevention Devices - All side sewers shall be equipped with an approved backwater prevention device, as detailed on the Standard Drawings (see Drawing SD 6).

W. Check Valve - If the difference between the elevation of the lowest fixture and the backwater prevention device is less than six (6) inches, a check valve shall be installed between the backwater prevention device and house (see Drawing SD 7).

X. Abandoned or Unused Side Sewers - Any abandoned or unused side sewers connected to District mains, including side sewers from homes or buildings that are demolished, or any side sewer from property line to District mains shall be dug out and followed to the District main, and the old wye or tee or old connection area shall be cut away and spliced with a solid piece of pipe of the same size and dimension. The District Inspector shall be present when this procedure is done.

4-04 Sewer Structures.

B. Manholes - Manholes shall be placed at all intersections of sewer lines other than side sewer connections less than eight (8) inches in diameter, at all vertical or horizontal angle points, and at intervals not greater than 350 feet. Where practical, manholes shall be located near the center of street intersections and shall be accessible to maintenance vehicles. All manholes from which future sewer line extensions are anticipated shall have a pipe stub planned and installed at the grade and the direction of the anticipated sewer extension. The pipe stub shall be installed with permanent watertight plug in bell of 5-foot pipe stub out of manhole. The following regulations shall also apply:

1. A standard drop manhole with external hubbed ductile iron drop connection shall be installed when the invert elevation of the incoming sewer is greater than two (2) feet higher than the outgoing sewer. Otherwise, the crown elevation of the incoming sewer must match the crown elevation of the outgoing sewer, allowing for the appropriate slope through the manhole. The District must specifically approve all proposed drop manholes.

2. Where there is to be more than thirty (30) degrees deflection between any inlet line and the outlet line of a manhole, the fall through the manhole shall be a minimum of 0.10 of a foot.

3. The angle of deflection between incoming and outgoing lines in a manhole shall not be greater than ninety (90) degrees.

4. Unless special arrangements are made, all lines connecting to existing manholes shall conform to the Standard Drawings for new manholes.

5. A manhole shall be located at the terminus of all main sewers in street.

B. Rodhole - A rodhole may be installed only in easements out of the road right-of-way at the terminus of a main sewer where there is no possibility that the sewer will be extended to serve upstream properties. The distance from a rodhole to the nearest manhole shall be no greater than two hundred (200) feet.

C. Flushing Inlets - A flushing inlet shall be installed on the force main near each new pump station, at a location specified by the District, in order to provide easy access for flushing the system for a temporary pumping connection if the pump station is out of service.

D. Test Fittings - All test fittings shall, unless otherwise approved, be tees or wye branches of the same size, type and quality as that of the line in which they are being installed. The branch of all test fittings shall be installed in an upright position and shall be brought to grade as a cleanout or removed after testing.

E. Pressure Frame and Covers - Pressure (watertight) frames and covers shall be installed when specified by the District, where drainage conditions may cause storm waters to inundate sewer structures.

F. Remodeling Structures - All structures to be remodeled shall comply with the Standard Drawings. Any remodeling of any structure shall be specified and/or detailed on the plans and approved by the District prior to any remodeling work.

G. Special Structures - Trunk sewer manholes, siphons, pumping systems, and other unusual structures require specific design approval by the District.

H. Locator Wire and Detection Tape - An AWG No. 14 locator wire and plastic detection tape shall be installed above all gravity sewers and force mains between manholes. There shall be a minimum of 1 foot of separation between locator wire and detection tape. The locator wire shall terminate with a minimum of three (3) feet of a coiled wire inside the manholes at each end of the sewer. Wire shall be neatly rolled with ends securely taped and hung in an out-of-the-way location. Wire is to be brought into manhole through a neat hole drilled through riser ring on top of taper a maximum of one (1) foot from the bottom of the casting.

SECTION 5 PLAN APPROVAL AND PERMIT ISSUANCE

5-01 General. The procedure outlined in this Section shall be followed for submittal, review and approval of plans, and permit issuance for sewer main extensions.

5-02 Plan Checking Deposit. The Plan Checking Deposit shall be paid to the District prior to any review of plans. This deposit is not refundable but, upon issuance of a main extension permit, the deposit will be credited against the total Plan Checking and Inspection Fees due under District rules and regulations.

5-03 Preliminary Review. To facilitate the processing and review of plans for main extensions, all of the following materials shall be submitted at least three weeks prior to the District Board meeting at which approval of plans is desired.

1. Two (2) complete sets of sewer plans and profiles.

2. Two (2) complete sets of any required special specifications.

3. Two (2) copies of the Job Engineer's preliminary cost estimate.

4. Two (2) copies of maps and descriptions for any required sewer easements.

5. If the project is a subdivision, submit one (1) copy of the final map, including the proposed certificate page, and one (1) copy of the proposed grading plans.

After submittal, the above materials will be reviewed by the District staff and the District Engineer. If there are any required corrections and/or recommended revisions, they will be noted on the plans, easements, etc., and one set will be returned to the Job Engineer for revisions and resubmittal. This procedure will be repeated until all District requirements are met and the plans are ready for approval of the District Board.

5-04 Final Review and Approval. In order to obtain final approval, the Job Engineer shall submit the following materials, as revised in accordance with the above paragraph.

1. Four (4) complete sets of sewer plans and profiles.

2. Four (4) complete sets of any required special specifications.

3. One (1) copy of maps and descriptions for all required easements, together with signed and notarized deeds from each grantor, ready for recordation by the District.

4. If the project is a subdivision, submit one (1) copy of the final map, including one (1) copy of the grading plans (both in form to be presented to the City or County for final approval).

5. One (1) copy of the Job Engineer's estimate for all sanitary sewer facilities.

6. Any other pertinent plans, information or materials specifically required by the District Manager or District Engineer.

When all of these materials are received and given final review, the plans will be submitted to the District Board for approval. The Board meets regularly twice each month (specific dates may be obtained from the District office) and the Job Engineer will need to schedule his work and submittal of plans to meet an appropriate Board meeting date. After approval of the plans by the District Board, the District Manager will stamp "Approved" and sign all copies. He will then transmit one approved copy to the owner and one to the Job Engineer for his use. NOTE: The plan approval by the District shall become void six (6) months from the date of approval, unless a main extension permit for the work has been issued within that time.

5-05 Plan Revisions. In the event that any plan or field condition is encountered during construction that necessitates deviation from the approve plans, all work shall be halted until the plans are revised by the Job Engineer, resubmitted to the District and the revisions approved by the District. When revisions are required, the Job Engineer shall submit two (2) preliminary copies of the proposed revised sheets of the plans along with a letter explaining the recommended revisions. When the revisions are in approvable form, four (4) copies of the revised plan sheets shall be submitted for signature of the District Manager and distribution similar to the original plans. The Permittee shall bear all costs for any plan revisions. The Job Engineer shall be responsible for seeing that all revisions are appropriately shown on the "Record Drawings" for the project.

5-06 Statement of Fees and Charges. During District review of the plans but prior to final approval, the District Manager will prepare a Statement of Fees and Charges which will be sent to the Permittee, with a copy to the Job Engineer, detailing the fees and charges which must be paid and setting forth the required performance bond amount, and any other information or materials which may be required (other than approval of plans, specifications, etc.) prior to issuance of the main extension permit.

5-07 Issuance of Main Extension Permit. Written permission to construct the main extension will be granted only after all District requirements have been met, including final approval of all plans and specifications, payment of all appropriate fees and charges, posting of the required performance and maintenance bond, acquisition of all required easements, and the filing of a permit application form, receipt of the certificate of insurance from the Contractor, etc. (See Section 10-12.) No work shall be permitted to proceed until the main extension permit has been issued.

5-08 Subdivisions. Before approving the recordation of a subdivision final map, the City, Town and/or the County require a letter from the District stating that plans and specifications for necessary sewerage facilities to serve each lot in the subdivision have been approved by the District and that financial arrangements have been made to insure installation of these facilities.

Before this letter is written, the property must be annexed to the District (if not already in the District) and the main extension permit must have been issued as above provided.

5-09 Items to Consider before Submitting Plans. The following is a general list of items which should be considered by the Job Engineer before submitting plans for review and approval of the District.

1. Have arrangements been made for the payment of the Plan Checking Deposit?

2. Are there any special details needed, such as special drawings, notes, and/or specifications to supplement the Standard Specifications?

3. Is the property to be sewered within the District boundaries?

4. If the property is not in the District, has the Owner requested in writing that his property be annexed and submitted the required Annexation Fee?

5. Can the proposed sewerage system provide service to properties other than those arranging for the installation? If so, have full provisions been made for the additional service or future extension?

6. Has County/City Flood Control approval been secured for all sewer line crossings of storm water channels?

7. Are all necessary easements prepared?

8. Are there any special permits and/or licenses required in connection with the work?

9. Have all existing and future underground utilities been shown on the plans and are there any conflicts or special requirements for field location?

SECTION 6 CONSTRUCTION ENGINEERING

6-01 Staking Requirements. The Job Engineer shall be responsible for providing all necessary field surveys and construction staking. Grade and alignment stakes shall be set in advance of any trenching or excavation and, in general, stakes for straight sewers shall be set at either 25 or 50 foot intervals, depending upon topography and grade of the sewer. Intervals of 25 feet, or less, shall be used through all horizontal and vertical curves and for sewers with a grade flatter than 0.005. Stakes shall be approximately marked to show the Engineer's station, the offset, and the cut to sewer invert.

6-02 Side Sewer Locations. Prior to installation of lateral sewers, the lateral location and elevation at the property line shall be staked and flagged in the field by the Job Engineer.

6-03 Survey Authorization and Responsibility. When a survey is to be made on private property for a public sewer, permission of the property owner shall be obtained by the Job Engineer or his representatives prior to entry. The District will not be answerable or accountable in any manner for any loss or damage that may come about during or as a result of survey work by others.

6-04 Field Changes. During construction the District, through the District Manager, District Engineer or District Inspector, may request the Job Engineer to make changes in the work. The Job Engineer shall review such changes and prepare the necessary drawings and descriptions for execution by the Construction Contractor.

6-05 Soil Compaction Tests. For all works in public streets and works not in public streets as required by the District, the Applicant shall retain a Soils Engineer to take compaction tests in the trench backfill or embankment construction. On District projects, the District will retain a Soils Engineer.

The Soils Engineer shall take compaction tests at intervals and depths as required by the agency having jurisdiction on the right of way or as required by the District; as a minimum, one compaction test shall be taken midway in the intermediate backfill and on the surface every 100 feet of sewer line length. The Soils Engineer shall immediately provide the District Inspector the results of the soils tests. At the end of the job, the Soils Engineer shall provide the District with a summary of the soils tests taken.

6-06 Record Drawings. Upon completion of the work and prior to acceptance by the District, the Job Engineer shall provide "record drawings" to the District. Record drawings shall consist of all details shown on the original approved plans, corrected and/or expanded to reflect all design or construction changes from the approved plans. Particular attention should be paid to changes in the following items:

1. Sewer line and structure locations.
2. Surface and invert elevations of structures.
3. Slope, size, type of pipe, and length between structures.
4. Wye and lateral locations.

The Job Engineer shall submit a preliminary copy of the record drawings for review by the District.. After review and approval by the Inspector or other District representative, the Job Engineer shall submit one (1) complete set of high quality prints and one (1) complete set of high quality duplicate tracings, noted and signed by the Job Engineer as "Record Drawings".

SECTION 7 DISTRICT PERMITS, LICENSES AND BONDS

7-01 Permits. All work performed in relation to and for connection to the District sewer system requires a specific permit in accordance with District rules and regulations. In the case of District contract work, the contract is considered to be the District permit for all work included in the contract under District jurisdiction.

A. Main Sewer, Structure and Manhole Installation Permits - Engineering plans and profiles are required in accordance with Sections 1 through 6 of these specifications.

B. Side Sewer, Lateral and Building Sewer Connection Permits - Location plans are required when a 6-inch or larger side sewer is to be installed and at any other time when specifically required by the District.

7-02 Licenses. Contractors performing work requiring a permit by the District shall be licensed by the State of California. Work on public property, streets, roads and other rights-of-way shall be performed only by duly licensed Contractors. Property owners may perform side sewer work on their own property.

7-03 Bonds. Prior to the issuance of a permit for a sewer main extensions (public sewer construction), the applicant shall furnish to the District a 100% faithful performance bond, cash, or other improvement security acceptable to the District, in the amount of the total estimated cost of the work as determined by the District, based on the District's Table of Current Construction Costs. Such faithful performance bond, cash deposit, or other improvement security shall be conditioned upon the performance of the work in accordance with the terms and conditions of the permit, and unless more stringent requirements are otherwise specified by the District Board, and 10% of the bond shall remain in effect to guarantee the correction of faulty workmanship and the replacement of defective materials for a period of one (1) year from and after the date of acceptance of the work by the District Board.

SECTION 8 CONTROL OF WORK

8-01 Authority of District. All work shall be done in a workmanlike manner and shall be performed to the reasonable satisfaction of the District, which shall have general control of all work included hereunder. To prevent disputes and litigation, the District shall in all cases determine the amount, quality, acceptability, and fitness of the several kinds of work and materials which are provided; shall decide all questions relative to the true construction, meaning, and intent of the specifications and drawings; and shall have the power to reject or condemn all work or material which does not conform to the plans and specifications.

Should the Permittee or Contractor fail to act promptly or be remiss in the prosecution of any work done under these specifications, or should the exigencies of the case require that repairs or replacements be made before the Contractor can be notified or can respond to notification, the District may, at its option, make or cause to be made the necessary repairs or replacements or perform the necessary work, and the Permittee or Contractor shall pay to the District the cost of such work plus fifteen percent (15%) for District administration. Any such action by the District shall not relieve the Permittee, Contractor or his/her surety of their obligation or responsibility in the prosecution of the job, nor do these provisions establish contingent liability on the part of the District.

The Permittee shall pay all costs of his/her contractor, including the cost of any changes in the work required by the District.

8-02 Plans. The approved plans shall be supplemented by such working drawings as are necessary to control the work adequately. All authorized alterations affecting the requirements and information given on the approved plans shall be in writing. No changes shall be made in any plan or drawing after it has been approved by the District, except by its direction.

The Contractor shall keep on the job site a copy of the plans and specifications, as well as a copy of all City, County, State and other governing specifications, which plans and specifications shall be accessible to the District at all times. The plans, specifications, standard drawings, Special Provisions and all supplementary documents are to be considered the requirements of the work, and it shall be the responsibility of the Contractor to familiarize himself fully with the requirements of these and the various governing authorities having jurisdiction over the work.

Working drawings, not included in the plans furnished by the Job Engineer, may be required for the prosecution of the work. They shall include shop details, erection plans, masonry layout diagrams, and bending diagrams for reinforcing steel, which shall be approved by the District before any work involving these plans is performed.

It is expressly understood that approval by the District of the Contractor's working drawings does not relieve the Contractor of any responsibility for accuracy of dimensions and details. It is mutually agreed that the Contractor shall be responsible for agreement and

conformity of his working drawings with the approved plans and specifications. Further, approval by the District of the Contractor's working drawings or any method of work proposed by the Contractor shall not relieve the Contractor of any of his responsibility for any errors therein and shall not be regarded as any assumption of risk or liability by the District or any officer or employee thereof, and the Contractor shall have no claim under the contract on account of the failure or partial failure or inefficiency of any plan or method so approved. Such approval shall be considered to mean merely that the District has no objection to the Contractor using, upon his own full responsibility, the plan or method proposed.

8-03 Suggestions to Contractor. Any plan or method for work suggested by the District to the Contractor, but not specified or required, if adopted or followed by the Contractor in whole or part, shall be used at the risk and responsibility of the Contractor; and neither the District, District Board, District Manager nor the District Engineer or their agents shall assume responsibility therefor.

8-04 Conformity with Plans and Allowable Deviations. Finished surfaces in all cases shall conform with the lines, grades, cross-sections, and dimensions shown on the approved plans. Unless otherwise specified herein, deviations from the approved plans and working drawings, as may be required by the exigencies of construction, will in all cases be determined by the District and authorized in writing.

8-05 Interpretation of Plans and Specifications. The plans and specifications are intended to be explanatory of each other. Any work indicated in the plans and not in the specifications, or vice versa, is to be executed as if indicated in both. All work shown on the plans, the dimensions of which are not shown, shall be accurately followed to the scale to which the plans are made, but shown dimensions are in all cases to be followed, where given, though they differ from scaled measurements. Large scale drawings shall be followed in preference to small scale drawings. Should it appear that the work to be done, or any of the matters relative thereto, are not sufficiently detailed or explained in the plans and specifications, the Contractor shall apply to the Job Engineer for such further explanation as may be necessary, and shall conform thereto as part of the contract. In the event of any doubt or question arising respecting the true meaning of the specifications, Special Provisions or plans, reference shall be made to the District and its decision thereon shall be final.

8-06 Superintendence. The Contractor shall give his personal attention to and shall supervise the work to the end that it shall be prosecuted faithfully, and when he is not personally present on the work, he shall at all reasonable times be represented by a competent superintendent on foreman who shall receive and obey all instructions or orders given by the District, and who shall have full authority to execute the same, and to supply materials, tools and labor without delay and who shall be the legal representative of the Contractor. The Contractor shall be liable for the faithful observance of any instructions delivered to him or to his authorized representative.

8-07 Character of Workmen. The Contractor shall employ only such foreman, mechanics and laborers as are competent and skilled in their respective lines of work, and, when required

by the District, the Contractor shall discharge any person who commits trespass, or is, in the opinion of the District, incompetent, unfaithful, intemperate, disorderly, or uses threatening or abusive language to any person on the work representing the District, or is otherwise unsatisfactory, and such person shall not again be employed on the work. Such discharge shall not be the basis of any claim for compensation or damages against the District or any of its officers or representatives.

8-08 Construction Utilities. The Contractor shall be responsible for providing, for and on behalf of his work under the contract, all necessary utilities, such as special connections to water supply, sanitation facilities, telephones, power lines, fences, roads, watchmen, suitable storage places, etc. All utility arrangements, including applicable permits, shall be obtained prior to the start of work and paid for by the Contractor.

8-09 Lines and Grades. When the Contractor requires stakes or marks, he shall notify the Job Engineer of his requirements at least forty-eight (48) hours in advance of starting operations that require such stakes or marks. The Contractor shall have all the utilities located and marked prior to staking.

Stakes and marks set by the Job Engineer shall be carefully preserved by the Contractor. If any such stakes and marks, necessary to complete construction are destroyed or damages by reason of the Contractor's operation, the Contractor shall pay for replacing or restoring such stakes and marks by the Job Engineer.

The Contractor shall furnish all additional stakes, templates, and other material necessary for accurately transferring lines and grades to the bottom of trenches or excavations for the construction of pipelines and structures. For this purpose, he shall employ competent personnel or an independent licensed Civil Engineer or licensed Land Surveyor acceptable to the Job Engineer, who shall be responsible for accurately performing this work.

All distances given and measurements will be in a horizontal plane. Grades are given from the top of stakes or nails, or other points approved by the District.

Three (3) consecutive points shown on the same rate of slope must be used in common, in order to detect any variations from a straight grade, and in case an such discrepancy exists, it must be reported to the Job Engineer and to the District. If such discrepancy is not reported, the Contractor shall be responsible for any error in the finished work.

8-10 Proof of Compliance with Specifications and Drawings. In order that the District may determine whether the Contractor has complied with the requirements of the contract not readily enforceable through inspection and tests of work and material, the Contractor shall, at any time when requested, submit to the District properly authenticated documents or other satisfactory proofs as to his compliance with such requirements.

8-11 Errors and Omissions. If the Contractor, in the course of the work, finds and errors or omissions in plans or in the layout as given by survey points and instructions, or if he finds any

discrepancy between the plans and the physical conditions of the locality, he shall immediately inform the District, in writing, and the District shall promptly verify the same. Any work done after such discovery, until authorized, will be done at the Contractor's risk.

8-12 Inspection. The District's representatives shall at all times have access to the work whenever it is in preparation or progress, and the Contractor shall provide proper and safe facilities for such access and for inspection. The District shall be furnished with every reasonable facility for ascertaining that the materials and the workmanship are in accordance with the requirements and intentions of the plans and specifications. All work done and all materials furnished shall be subject to his inspection and approval.

If the specifications, the District's instructions, laws, ordinances, or any public authority require any work to be specifically tested or approved, the Contractor shall give the District timely notice of its readiness for inspection, and if the inspection is by another authority than the District, of the date fixed for such inspection. If any work should be covered up without approval or consent of the District, it must, if required by the District, be uncovered for examination and properly restored at the Contractor's expense.

The inspection of the work shall not relieve the Contractor of any of his obligations to fulfill his contract as prescribed, and defective work shall be made good and unsuitable materials may be rejected, not withstanding that such defective work and materials have been previously overlooked by the District and accepted for payment.

All inspection requested outside of normal District working hours or days shall be reimbursed to the District by the Contractor at rates established by the District.

8-13 Inspection by Division of Industrial Safety. All work shall conform to the applicable requirements of the State of California Division of Industrial Safety. When the work involves construction of a treatment plant or pump station, it shall be inspected by representatives of said Division prior to the final inspection by the District (see Section 8-24). Any necessary corrective work disclosed by such inspection shall be satisfactorily completed at the Contractor's expense prior to acceptance of the work by the District.

8-14 Commencement of Work and Delays - Permit Work. This section shall apply to the commencement of work and delays for work done under permit within the District. For District contract work, requirements concerning the progress of the work, etc., refer to the job specifications for said work.

Before initial work is begun, the Contractor and his foremen shall file with the District addresses and telephone numbers where they can be reached during non-working hours.

As provided in Section 11-02, prior to excavation work, the Contractor shall contact all utilities and agencies which have or may have aboveground and/or underground facilities within the work area.

The Contractor shall also give the District notice of the time when he will start work or resume work when suspended. Notices shall be given at least forty-eight (48) hours in advance of the starting or resumption time, exclusive of Saturdays, Sundays, or holidays, for the purpose of permitting the District to make the necessary assignment of its representative or inspector on the work. After the Contractor once begins the work, the work shall be prosecuted diligently and continuously each day until completed. Work may be suspended only during emergencies or inclement weather or where required under these specifications.

In the event the District shall determine that the work is not proceeding in accordance with plans and these specifications, or any applicable rules and regulations, the District may order the cessation of further work until the work proceeds in compliance with such requirements. All delays in the work occasioned by such stoppage shall not relieve the Contractor of any duty to perform the work or serve to extend the time for its completion.

When, in the opinion of the District, the Contractor's delay in completing the work or failure to comply with the plans and specifications and any applicable rules and regulations has or may cause damage to the existing sanitary sewerage facilities of the District, the District may order such work to be done as is necessary to protect said facilities and the expense of such work shall be charged to the Contractor by the District.

8-15 Removal of Defective and Unauthorized Work. All work which has been rejected as defective shall be remedied, or removed and replaced by the Contractor in an acceptable manner at no cost to the District. Any work done beyond the lines and grades shown on the plans or established by the District, or any extra work done without written authority, will be considered as unauthorized and will not be paid for. Work so done may be ordered removed at the Contractor's expenses. Upon failure on the part of the Contractor to comply promptly with any order of the District made under the provisions of this article, the District shall have the authority to cause defective work to be remedied, or removed and replaced, and unauthorized work to be removed and bill the costs to the Contractor or the Permittee.

8-16 Access to Work. During the performance of the work, the District and its agents and employees may at any time enter upon the work, or the shops where any part of such work may be in preparation, or the factories where any materials for use in the work are being or are to be manufactured or fabricated, and the Contractor shall provide proper and safe facilities therefor, and shall make arrangements with manufacturers to facilitate inspection of their processes and products to such extent as the District's interest may require. Other Contractors performing work for the District may also, for all purposes required by their respective contracts, enter upon the work.

8-17 Placing Portions of Work in Service. If desired by the District, portions of the work, as completed, may be placed in service, and the Contractor shall give proper access to the work for this purpose, but such use and operation shall not constitute an acceptance of the work by the District, and the Contractor shall be liable for defects due to defective materials, workmanship and equipment until the entire work is finally accepted by the District. The

warranty period on equipment shall not begin until the entire work is finally accepted by the District.

8-18 Removal or Replacement of Work Done Without Lines, Grades or Levels. Any work done without lines, levels or grades being given by the Job Engineer or without favorable review of a District Inspector, may be ordered replaced at the Contractor's sole expense, except when such work is specifically authorized by the District.

8-19 Equipment and Methods. The work under the contract or permit shall be prosecuted with all materials, tools, machinery, apparatus, and labor and by such methods as are necessary to the complete execution of everything described, shown or reasonably implied. If at any time before the beginning or during the progress of the work, any part of the Contractor's plant, or equipment or any of his methods of execution of the work, appear to the District to be unsafe, inefficient or inadequate to insure the required quality or rate of progress of the work, he may order the Contractor to increase or improve his facilities or methods, and the Contractor shall comply promptly with such orders; but neither compliance with such orders nor failure of the District to issue such orders shall relieve the Contractor from his obligation to secure the degree of safety, the quality of the work, and the rate of progress required of the Contractor. The Contractor alone shall be responsible for the safety, adequacy, and efficiency of his plant, equipment and methods.

8-20 Unfavorable Weather and Other Conditions. During unfavorable weather and other conditions, the Contractor shall pursue only such portions of the work as shall not be damaged thereby. No portions of the work whose satisfactory quality and efficiency will be effected by any unfavorable conditions shall be constructed while these conditions obtain, unless by special means or precautions approved by the District, the Contractor shall be able to overcome them.

8-21 Easement Construction. The Contractor shall make every effort to restrict his operations to areas within the easements or rights-of-way provided for the work. He shall caution all employees not to trespass or operate equipment outside the easements provided, without first having obtained written permission from adjacent property owners. A copy of said written permission is to be submitted to the District prior to any encroachment. Prior to commencing any work on private property or within easements, the Contractor shall take pictures of the original condition. The Contractor shall clean up and restore all easement and other disturbed areas to a condition equal to or better than the original.

The Contractor shall conduct his operations so as to cause as little damage as possible to existing yard improvements. Yard improvements such as fences, landscaping, trees, patios, walkways, driveways, etc., in the line of construction shall be removed by the Contractor only after approval by the District. Unless otherwise provided in the Special Provisions or permitted by the District and/or property owners, all fences, trees, plants, lawns, ornamental shrubbery, patios, walkways, driveways, and any other yard improvements within the working easements or rights-of-way which have been damaged by the Contractor's operations shall be completely replaced, repaired or restored to its original conditions by the Contractor to the

satisfaction of the District and/or property owner. Replacing, repairing, and restoring shall be accomplished with materials of the same kind and quality as those of the original improvement.

The Contractor shall remove, haul and dispose of, off the job site, all surplus and waste materials resulting from his operations that are not required to complete the project and shall thoroughly clean up the site of the work and dress the slopes and banks to the satisfaction of the District.

Full compensation for conforming to the requirements of this section shall be considered as included in the prices paid for the various contract items of work and no additional allowance will be made therefor.

8-22 Alterations. The District reserves the right to increase or decrease the quantity of any items or portions of the work or to omit portions of the work as may be deemed necessary or advisable by the District; also to make such alterations or deviations, additions to, or omissions from the plans and specifications, as may be determine during the progress of the work to be necessary and advisable for the proper completion thereof. Upon written order of the District, the Contractor shall proceed with the work as increased, decreased or altered. On private work, the Permittee shall pay all costs of any alternatives to work required by the District.

8-23 Cleaning Up. The Contractor shall confine his equipment, storage of materials, and construction operations to such limits as may be directed by the District, and shall not allow the site of the work to become littered with trash and waste material, but shall maintain the same in a neat and orderly condition throughout the construction period. The District shall have the right to determine what is or is not waste material or rubbish and the place and manner of disposal.

On or before the completion of the work, the Contractor shall without charge therefor, carefully clean out all pits, pipes, chambers or conduits and shall tear down and remove all temporary structures built by him and shall remove rubbish of all kinds from any of the grounds which he has occupied and leave them in first class condition.

8-24 Final Inspection. When the work contemplated by the contract, permit or agreement has been completed, the District will, upon request by the Contractor, make the final inspection on the grounds together with an authorized representative or representatives of any and all other agencies having an interest in the work.

SECTION 9 CONTROL OF MATERIAL

9-01 Source of Supply and Quality of Materials. Prior to commencement of any work, the Contractor shall submit to the District, a list of the suppliers or sources of all materials to be incorporated in the work. This list shall be approved by the District before any of the materials are delivered to the job site.

Only new materials conforming to the requirements of these specifications and approved by the District shall be used in the work. All materials proposed for use may be inspected or tested at any time during their preparation and use. After trial, if it is found that sources of supply which have been approved do not furnish a uniform product, or if the product from any source proves unacceptable at any time, the Contractor shall furnish approved material from other approved sources. No material which, after approval, has in any way become unfit for use shall be used in the work. Manufacturer's guarantees, instructions and parts lists shall be delivered to the District before acceptance of the work. All materials shall be manufactured, handled, and used in a workmanlike manner to insure completed work in accordance with the plans and specifications.

9-02 Quality in Absence of Detailed Specifications. Whenever under the contract, permit or agreement, the Contractor is required to furnish materials or manufactured articles or to do work for which no detailed specifications are set forth, the materials or manufactured articles shall be of the best grade in quality and workmanship obtainable in the market from firms of established good reputation, or, if not ordinarily carried in stock, shall conform to the usual standards for first class material or articles of the kind required, with due consideration of the use to which they are to be put. In general, the work performed shall be in full conformity and harmony with the intent to secure the best standard of construction and equipment of the work as a whole or in part.

9-03 Drawings, Samples and Tests. As soon as possible after execution of the contract or issuance of the permit, the Contractor shall submit to the District, in triplicate, sufficient information including, if necessary, assembly and detail drawings to demonstrate fully that the equipment and materials to be furnished comply with the provisions and intent of the specifications and drawings. If the information thus submitted indicates the equipment or material is acceptable, the District will return one (1) copy stamped with his approval; otherwise one (1) copy will be returned with an explanation why the equipment or material is unsatisfactory. The Contractor shall have no claim for damages or extension of time on account of any delay due to the revision of drawings or rejection of material. Fabrication or other work performed in advance of approval shall be done entirely at the Contractor's risk. After approval of the equipment or material the Contractor shall not deviate in any way from the design and specifications given without the written consent of the District. When requested by the District, sample or test specimens of the materials to be used or offered for use in connection with the work shall be prepared at the expense of the Contractor and furnished by

him in such quantities and sizes as may be required for proper examinations and tests, with all freight charges prepaid and with information as to their sources.

All samples shall be submitted before shipment and in ample time to permit the making of proper tests, analyses, or examinations before the time at which it is desired to incorporate the material into the work. All tests of materials furnished by the Contractor shall be made by the District in accordance with recognized standard practice. No material shall be used in the work unless or until it has been approved by the District. Samples will be secured and tested whenever necessary to determine the quality of the material.

9-04 District Furnished Materials. The Contractor shall furnish all materials required to complete the work, except such materials as are designated on the plans or in the Special Provisions to be furnished by the District.

Upon written request of the Contractor, materials to be furnished by the District will be delivered to him within a reasonable time at the points designated in the Special Provisions, or if not designated in the Special Provisions, then to the project. They shall be unloaded and hauled to the site of the work by the Contractor at his expense, the cost of handling and placing all materials after they are delivered to the Contractor shall be considered as included in the contract prices paid for the items in connection with which they are used.

The Contractor will be held responsible for all materials delivered to him, and deductions will be made from any monies due him to make good any shortages and deficiencies, for any cause whatsoever, which may occur after such delivery, or for any demurrage charges due to delinquency in unloading.

9-05 Local Materials. The Contractor shall satisfy himself as to the quantity of acceptable material which may be produced or obtained at local sources, and the District will not assume any responsibility as to the quantities or quality of acceptable material available.

When tests of materials from sources in the vicinity of the work have been made by the District, the results of such tests will be available to the Contractor or to prospective bidders on inquiry at the office of the District. This information is furnished for the Contractor's or the bidder's convenience only and the District does not guarantee such tests and assumes no responsibility whatever as to the accuracy thereof or the interpretation thereof stated in the test records.

9-06 Acquisition of Materials. The Contractor shall have on hand, at the time he starts construction of any section of the work, all materials necessary to complete in a reasonable length of time, all work which would create a hazard or inconvenience if not completed.

9-07 Storage of Materials. Materials shall be so stored as to insure the preservation of their quality and fitness for the work. When considered necessary by the District, they shall be placed on wooden platforms or other hard, clean surfaces and not on the ground. They shall

be placed under cover when so directed. Stored materials shall be so located as to facilitate prompt inspection.

All surplus piping materials shall be removed from the site of the work within five (5) days after completion of the pipe laying.

9-08 Defective Materials. All materials not conforming to the requirements of the specifications shall be considered as defective and all such materials, whether in place or not, shall be rejected. They shall be removed immediately from the site of the work, unless otherwise permitted by the District. No rejected material, the defects of which have been subsequently corrected, shall be used until approval in writing has been given by the District. Upon failure on the part of the Contractor to comply promptly with any order of the District made under the provisions of this section, the District shall have the authority to remove and replace defective material and to deduct the cost of removal and replacement from any monies due or to become due the Contractor.

9-09 Trade Names and Alternatives. For convenience and designation on the plans or in the specifications, certain equipment or articles or materials may be designated under trade names or the names of the manufacturers and with catalog information. Use of alternative equipment or an article or material which is of equal quality and of the required characteristics for the purpose intended will be permitted, subject to the approval of the District.

The burden of proof as to the comparative quality and suitability of alternative equipment or articles or materials shall be upon the Contractor and he shall furnish, at his expense, all information necessary or related thereto as required by the District. The District shall be the sole judge as to the comparative quality and suitability of alternate equipment or articles or materials and its decision shall be final. All additional costs required for redesign or modifications required to accommodate the substituted materials and/or equipment shall also be at the expense of the Contractor.

9-10 Certificates of Compliance. The Engineer may permit the use of certain materials or assemblies prior to sampling and testing if accompanied by a certificate of compliance stating that the materials involved comply in all respects with the requirements of the specifications. The certificate shall be signed by the manufacturer of the material or the manufacturer of assembled materials. A certificate of compliance must be furnished with each lot of material delivered to the work and the lot so certified must be clearly identified in the certificate.

All materials used on the basis of a certificate of compliance may be sampled and tested at any time. The fact that material is used on the basis of a certificate of compliance shall not relieve the Contractor of responsibility for incorporating material in the work which conforms to the requirements to the plans and specifications and any such material not conforming to such requirements will be subject to rejection whether in place or not.

The District reserves the right to refuse to permit the use of material on the basis of a certificate of compliance. The form of the certificate of compliance and its disposition shall be as directed by the District.

9-11 Salvage of Existing Materials. Unless otherwise indicated in the Special Provisions or permitted by the District, all old castings for manholes, rodholes, etc., and any other salvage construction materials which have been a part of the District's sewerage system may be claimed by the District and if so claimed such materials shall be delivered to the District yard.

SECTION 10 LEGAL RELATIONS AND RESPONSIBILITY

10-01 Laws to be Observed. The Contractor shall keep himself fully informed of all State and National laws and County, District and municipal ordinances and regulations which in any manner effect those engaged or employed in the work, or the materials used in the work, or which in any way effect the conduct of the work, and of all such orders and decrees of bodies or tribunals having any jurisdiction or authority over the same.

The Contractor shall at all times observe and comply with, and shall cause all his agents and employees to observe and comply with all such laws, ordinances, regulations, orders, and decrees; and shall protect and indemnify the District, and all of its officers and agents against any claim or liability arising from or based on the violation of any such law, ordinance, regulation, order or decree, whether by himself or his employees. If any discrepancy or inconsistency is discovered in the plans, drawings, specifications, or contract for the work in relation to any such law, ordinance, regulation, order or decree, the Contractor shall forthwith report the same to the District in writing.

10-02 Permits and Licenses. The Contractor shall, prior to beginning any work, procure all permits and licenses, pay all inspection charges and permit fees, give all notices necessary and incident to the due and lawful prosecution of the work and shall furnish to the District written proof of compliance of this section.

10-03 Patents. The Contractor shall assume all costs arising from the use of patented materials, equipment, devices, or processes used on or incorporated in the work, and agrees to indemnify and save harmless the District, the District Engineer and their duly authorized representatives, from all suits at law or actions of every nature for, or on account of the use of any patented materials, equipment, devices or processes.

10-04 Traffic Control. This section defines the Contractor's responsibility with regard to providing for the passage of public traffic through the work during construction. The Contractor shall so conduct his operations as to offer the least possible obstruction and inconvenience to public traffic, and he shall have under construction no greater length or amount of work than he can prosecute properly with due regard to the rights of the public. Prior to commencing work, the Contractor shall submit to the agency exercising jurisdiction over the road or street a written traffic control plan, including proposed street or land closure times, for their approval and shall comply with the approved traffic control plan and all requirements of the encroachment permit.

Unless detours are permitted or unless otherwise provided in the Special Provisions, all traffic shall be permitted to pass through the work with as little inconvenience and delay as possible. Street or lane closures shall only be made within the hours provided in the approved

traffic control plan. Spillage resulting from hauling operations along or across the traveled way shall be removed immediately at the Contractor's expense.

While trenching and paving operations are underway, traffic shall be permitted to use shoulders and the side of the roadbed opposite the one under construction. When sufficient width is available, a passageway wide enough to accommodate two (2) lanes of traffic shall be kept open at all times at locations where construction operations are in active progress.

In order to expedite the passage of public traffic through or around the work and where ordered by the Engineer, the Contractor shall install signs, lights, flares, barricades, and shall furnish flaggers and/or a pilot car and driver and other facilities for the sole convenience and direction of public traffic. Also where directed by the District or the agency having jurisdiction over the street, he shall provide and station competent flaggers whose sole duty shall consist of directing the movement of public traffic through or around the work. Where needed or required, flaggers shall be equipped with two-way radios.

In addition to the requirements herein specified for furnishing facilities and flaggers for expediting the passage of public traffic through or around the work, the Contractor shall furnish and erect, within or adjacent to the limits of the contract, such warning and directional signs required in the approved traffic control plan or as may be designated by the District Engineer or the agency having jurisdiction over the roadway.

All roads must be kept open for public traffic at all times unless specific written permission to close or restrict the use of a particular street is given by the District and by the Department of Transportation or the Public Works Director of Marin County or by any of the Public Works Director of the cities inside the District. In the event that closing of a particular street is allowed, it shall be the responsibility of the Contractor to notify police and fire departments, the school district and ambulance services as to the hours and dates of the street closure and routes of detours at least 24 hours in advance of their occurrence, and again to notify them when they are discontinued.

Whenever the Contractor's operations create a hazardous condition, he shall furnish at his own expense and without cost to the District, such flaggers and guards as are necessary to give adequate warning of and protection from any dangerous conditions to be encountered and he shall furnish, erect, and maintain such fences, barricades, lights, signs and other devices as are necessary to prevent accidents and avoid damage or injury. Flaggers and guards while on duty shall be equipped with red wearing and a red flag or paddle-type signal which shall be kept clean and in good repair. Flaggers shall be equipped with 2-way radios when needed for traffic control. Signs, flags, lights, and other warning and safety devices shall conform to the requirements set forth in the current "Manual of Traffic Controls for Construction and Maintenance Work Zones", issued by the State Department of Transportation.

10-05 Public Convenience. Convenience of abutting owners along the road or sewers shall be provided for as far as practicable. Convenient access to driveways, houses and buildings

along the line of the work shall be maintained and temporary approaches to crossings or intersecting highways shall be provided and kept in good condition.

The right is reserved to municipal corporations, county authorities, and to water, gas, telephone, telegraph, television, and other electric power transmission utilities to enter upon any public highway, road or right-of-way for the purpose of making repairs and changes that have become necessary by the reason of the sewer installation.

All fences subject to interference shall be maintained by the Contractor until the work is completed, at which time they shall be restored to the condition prior to starting the work.

Excavation and backfill shall be conducted in such a manner as to provide a reasonably smooth and even surface satisfactory for use by the public traffic at all times. When possible, sewer construction shall be conducted on one-half the width of the traveled way at a time and that portion of the traveled way being used by public traffic shall be kept open and unobstructed until the opposite site of the traveled way is ready for use by traffic. The roadbed shall be sprinkled with water, if necessary, to prevent dust nuisance.

Bridges of approved construction shall be installed and maintained across the trench at all cross walks, intersections, and at such other points where, in the opinion of the Engineer, traffic conditions make it advisable.

10-06 Safety. This section defines the Contractor's responsibility with regard to providing for safety during construction. The Contractor alone shall be responsible for the safety of his plant, equipment and methods, including trench shoring. All trench shoring and other construction methods shall comply with State and Federal Safety Orders.

Should the Contractor appear to be neglectful or negligent in furnishing warning and protective measures, the District may direct attention to the existence of a hazard, and may order the Contractor to improve his facilities or methods, and the Contractor shall promptly comply with such orders, and the necessary warning and protective measures shall be furnished and installed by the Contractor at his own expense without cost to the District. Whether or not the District issues orders, and whether or not he points out the inadequacy of warning and protective measures shall be furnished and installed by the Contractor at his own expense without cost to the District. Whether or not the Engineer issues orders, and whether or not he points out the inadequacy of warning and protective measures, and even though the Contractor takes appropriate steps in accordance therewith, the Contractor shall not be relieved from responsibility for securing the necessary degree of safety, nor shall his obligation to furnish and pay for appropriate plant, equipment and methods be abrogated.

No material or equipment shall be stored where it will interfere with the free and safe passage of public traffic, and at the end of each day's work and at other times when construction operations are suspended for any reason, the Contractor shall remove all equipment and other obstructions from that portion of the roadway to be opened for use by

public traffic. No material or other obstructions shall be placed within fifteen (15) feet of fire hydrants, which shall be at all times readily accessible to the fire department, nor within five (5) feet of United States mailboxes.

Open fires, smoking, the striking of matches, open flame lamps or lanterns, and electrical equipment and appliances that will generate or produce sparks shall not be permitted in the sewer or portion thereof where there is or may be an accumulation of inflammable gas in explosive quantities.

Full compensation for conforming to the requirements of this section shall be considered as included in the prices paid for the various contract items of work and no additional allowance will be made therefor.

10-07 Use of Explosives. The use of explosives is prohibited.

10-08 Preservation of Property. Attention is directed to Section 11 of these specifications. Due care shall be exercised to avoid injury to existing sewer improvements or facilities, streets, highways, pavements, utility facilities, adjacent property, and roadside trees and shrubbery that are not to be removed. Dust resulting from the Contractor's operations shall be kept to a minimum. If required by the District, the Contractor shall keep on the job site equipment for washing the streets. Where landscaping or landscape irrigation lines are disrupted, the Contractor shall provide for alternate watering for irrigation of lawns or landscaping.

In case it shall be necessary to remove any telephone, telegraph, or electric power transmission poles, gas pipes, water pipes, electrical conduits or underground structures of any character, or portion thereof, the owners or their agents or superintendents, upon proper application of the Contractor shall be notified by the authorized official to remove same within a specified time, and the Contractor shall not interfere with said structures until the time specified in the said notice shall have expired. In case water or gas service pipes crossing the line of the sewer trench are cut by the Contractor, such connection shall be restored without delay, after the passing of the trenching machine. Such cutting and restoration of service connections shall be at the sole expense of the Contractor and shall be done at such times and manner as to insure the least inconvenience to the users.

The Contractor shall examine all roadbeds, bridges, culverts and other structures on or near the work, over which he will move his materials and equipment, and before using them, he shall properly strengthened such roads and structures, where necessary. The Contractor shall be held responsible for any and all injury or damage to such roads and structures caused by reason of his operations.

Any painting, striping, safety buttons, traffic loops, catch basins, street signs and any public or private properties that are damaged or destroyed by the Contractor or his subcontractor shall be replaced with the consent of the District Engineer, the District Manager

or the encroachment permit issuer. This pertains to the job site or any area being used by the Contractor. The cost of replacement shall be included in the bid price for sewer line.

The fact that any underground facility is not shown upon the plans shall not relieve the Contractor of his responsibility under this section. It shall be the Contractor's responsibility to ascertain the existence of any underground improvements or facilities which may be subject to damage by reason of his operations.

Full compensation for furnishing all labor, materials, tools and equipment, and for doing all the work involved in protecting or repairing property as specified in this section, shall be considered as included in the contract work.

10-09 Responsibility for Damage or Injury. The District, District Board, District Engineer or any of their officers or employees shall not be answerable or accountable in any manner, for any loss or damage that may happen to the work or any part thereof; for any of the materials or other things used or employed in performing the work; for injury to any person or persons either workmen or the public; for damage to the property from any cause which might have been prevented by the Contractor, or his workmen, or anyone employed by him. The Contractor shall be responsible for any liability imposed by law upon the District, its officers, employees, or the Engineer for any damage to any person or property occurring or arising in the execution of the contract or performance of the work, including such resulting from a failure to abide by all applicable laws and regulations, or occurring or arising out of the improper execution of the contract or performance of the work, including such resulting from the failure to abide by all applicable laws and regulations, or occurring or arising out of the improper execution of the contractor or performance of the work, or resulting from work or materials which are defective, unsatisfactory, or imperfect or whose defective, unsatisfactory, or imperfect nature is discovered during any guarantee period, and shall indemnify, defend, and save harmless the District, the District Engineer and each of their agents, officers and employees, from all suits, actions, claims and demands of every name and description, brought for, or on account of any such injuries or damages and in addition to any remedy authorized by law, so much of the money due the Contractor under and by virtue of the contract as shall be considered necessary by the District may be retained by the District until the disposition has been made of such suits or claims for damages aforesaid.

No retention of money due the Contractor under and by virtue of the contract will be made by the District pending disposition has been made of such suits or claims for damages brought against the said county, city or district.

10-10 Contractor's Responsibility for Work. Until the acceptance of the work under the contract or permit, the Contractor shall have the charge and care of the work and of the materials to be used therein and shall bear the risk of injury, loss, or damage to any part thereof by the action of the elements or from any other cause whether arising from the execution or from the non-execution of the work. The Contractor shall rebuild, repair, restore, and make good all injuries or damages to any portion of the work or materials

occasioned by any of the above causes before its completion and acceptance and shall bear the expense thereof, except for such injuries or damages as are directly and proximately caused by acts of God.

In case of suspension of work for any cause whatever, the Contractor shall be responsible for the work as above specified, and he shall also be responsible for all materials delivered to the work, including materials for which he has received partial payment or materials which have been furnished by the District, and if ordered by the Engineer, he shall, at his own expense, properly store such materials. Such storage by the Contractor shall be on behalf of the District and the District shall at all times be entitled to the possession of such materials, and the Contractor shall promptly return the same to the site of the work when requested. The Contractor shall not dispose of any of the materials so stored except on written authorization from the Engineer. Where necessary to protect the work from damage, the Contractor shall, at his expense, provide suitable drainage and erect temporary structures.

Neither the District, District Engineer nor any of their agents, officers and employees assumes any responsibility for collecting indemnity from any person or persons causing damage to the work of the Contractor.

10-11 Indemnity. The Contractor shall hold harmless, indemnify and defend the District, the District Board, the District Engineer and each of their officers, agents and employees from any and all liability claims, suits, actions, losses or damage arising or alleged to arise from the performance of the work described herein or damages or claims to which the District, District Board, District Engineer and each of their officers, agents and employees may be subjected arising out of the Contractor's negligent performance, willful misconduct or unreasonable delay in connection with the work.

Indebtedness incurred for any cause arising out of the Contractor's negligent performance or willful misconduct in connection with work must be paid by the Contractor; and the District, District Board, District Engineer and each of their officers, agents and employees are hereby relieved at all times from any indebtedness or claim other than the contract sum.

10-12 Contractor's Insurance. The Contractor shall not commence work under the contract until he has obtained all insurance as specified herein; nor shall the Contractor allow any subcontractor to commence work on this project until the same insurance requirements have been complied with by each subcontractor.

The types of insurance the Contractor shall obtain and maintain for the full period of the contract will be Worker's Compensation Insurance, Comprehensive General Liability Insurance and Automobile Liability Insurance, as detailed below. Any insurance bearing on adequacy of performance will be maintained after completion of the project for the full guarantee period. The Contractor shall be solely responsible for damage payments up go the amount of the deductible. Nothing contained in these insurance requirements is to be

construed as limiting the extent of the Contractor's responsibility for payment of damages resulting from his operations.

A. Worker's Compensation Insurance - The Contractor and all subcontractors shall obtain for the period of the contract full Worker's Compensation Insurance coverage for all persons whom they employ or may employ in carrying out the work under this contract. This insurance will be in strict accordance with the requirements of the most current and applicable State Worker's Compensation Insurance laws. In case any class of employees engaged in hazardous work under the contract at the site of the project is not protected under the Worker's Compensation statute, the Contractor shall provide and shall cause each subcontractor to provide adequate insurance for the protection of his employees not otherwise protected. The Contractor shall sign and file with the District the certification required pursuant to Section 1861 of the Labor Code.

B. Comprehensive General Liability - The Contractor and all his subcontractors shall obtain for the period of the contract full Comprehensive General Liability Insurance coverage. This coverage shall provide for both bodily injury and property damage, including coverage for injury, sickness or disease, death, and destruction of property arising directly or indirectly out of or in connection with the performance of work under this contract, including explosion, collapse, under-ground exposure and flooding, and will provide for a limit of not less than one million dollars ($1,000,000) for all damages arising out of bodily injury, sickness or disease to, or death of one person in any one occurrence, and an aggregate limit of not less than two million dollars ($2,000,000). Included in such insurance will be contractual coverage sufficiently broad to insure that provision titled "Indemnity" set forth in Section 10-11.

C. Automobile Liability Insurance - The Contractor and all of his subcontractors shall obtain for the period of the contract Automobile Liability Insurance with a combined single limit of $1,000,000 for bodily injury or death and property damage. This insurance shall cover all vehicles, whether rented or owned, while being used in connection with performance of the work.

D. Proof of Carriage of Insurance - Before commencing work, the Contractor shall furnish the District a certificate or certificates, evidencing issuance of all insurance policies mentioned above. The Comprehensive General Liability insurance policy shall bear the following endorsements: (a) endorsement precluding cancellation or reduction in coverage before the expiration of thirty-five (35) days after the District shall have received written notification by registered mail from the insurance carrier, (b) a standard cross liability endorsement, (c) an endorsement naming as additional insureds the District, District Board, District Engineer and each of their officers, agents and employees, and (d) an endorsement that the insurance as provided is primary insurance, and no other insurance available to the above shall be called upon to contribute to a loss.

E. Insurance Rating - All insurance shall be placed with an insurance company with a current AM Best rating of not less than A:VII.

10-13 Disposal of Material Outside the Right-of-Way. Unless otherwise specified in the Special Provisions, the Contractor shall make his own arrangements for disposing of materials outside the right-of-way and he shall pay all costs involved therewith.

When any materials, including excess or unsuitable excavated earth or other sewer materials are to be disposed of outside the right-of-way, the Contractor shall first obtain a written permit from the property owner on whose property the disposal is to be made, and shall file a copy of the permit with the District, and the disposal area shall be kept in a neat and orderly condition throughout the construction period.

10-14 Cooperation Between Contractors and District. The Contractor shall cooperate with all other contractors who may be employed on the work or related or adjacent work, and any workmen who may be employed by the District on any work in the vicinity; he shall so conduct his operations as to interfere to the least possible extent with the work of such contractors or workmen. He shall make good promptly, at his own expense, any injury or damage that may be sustained by other contractors or employees of the District at his hands.

Any difference or conflict which may arise between the Contractor and other contractors, or between the Contractor and workmen of the District in regard to their work shall be adjusted and determined by the District.

If the work of the Contractor is delayed because of any acts or omissions of any other contractor or of the District, the Contractor shall on that account have no claim against the District other than for an extension of that time.

10-15 Acceptance of Work. When the District has made the final inspection as provided in Section 8-24, and determines that all work under the contract, permit or agreement has been satisfactorily completed in all aspects in accordance with the plans and specifications and District rules and regulations, he will recommend formal acceptance by the District Board of Directors. Approved record drawings as required under Section 6-05 shall be submitted prior to acceptance of the work by the District.

10-16 Guarantee of Work. Unless more stringent requirements are otherwise specified (or in the case of permit work set forth in the form of a condition on the main extension permit), all work shall be guaranteed for a period of one (1) year from the date of acceptance by the District. The Contractor shall promptly make all needed repairs arising out of defective materials, workmanship and equipment. The District is hereby authorized to make such repairs if within ten (10) days after the mailing of the notice in writing to the Contractor, or his agent, the Contractor shall neglect to make or undertake with due diligence the aforesaid repairs; provided, however, that in case of an emergency where, in the opinion of the District,

delay would cause serious loss or damage, repairs may be made without notice being sent to the Contractor, and the Contractor shall pay the costs thereof.

10-17 Personal Liability. Neither the District Board, the District Engineer nor any other officer or authorized employee of the District shall be personally responsible for any liability arising under or by virtue of the contract.

10-18 Protection of Survey Monuments. Various survey monuments consisting of iron pipe, cast iron, brass, and concrete markers may be located along the center lines of streets, at intersections, points of beginning and ending of curves, property corners, and at other points, and where the installation of the sewers or other work of the contract may cause these monuments to be destroyed or disturbed. The Contractor shall notify the Job Engineer and the Contractor shall not disturb any monument or property corner that must be removed in the performance of his work until he has been advised by the Job Engineer that it has been properly referenced out for resetting. Should the Contractor disturb or remove any monuments or property corners due to his neglect, he shall be held responsible for the expense of their resetting by the District.

10-19 Sewer Service. The Contractor shall be held solely responsible to provide uninterrupted sewer service to all services effected by his work. The Contractor shall protect and indemnify the District, the District Board, the Inspector and all other officers, agents and employees against any claim or liability arising from or based on failure to provide such continuous service.

10-20 Business License. Each incorporated City and the County of Marin requires a business license.

SECTION 11 UTILITIES, OBSTRUCTIONS AND CONCRETE REMOVAL

11-01 Preservation of Property. Attention is directed to Sections 10-08 and 10-09, "Preservation of Property", and "Responsibility for Damage or Injury" of these specifications. Due care shall be exercised to avoid damage to existing improvements, utility facilities, and adjacent property. When any railroad, street, highway, private or public utility is crossed, all precautionary construction measures required by the owner of said crossing shall be followed by the Contractor.

11-02 Utilities. A particular effort shall be made to locate and indicate on the plans underground utilities and/or other facilities which may conflict with, cross or lie close to the work. The service connections to these utilities may be, but are not necessarily, shown on the drawings. Overhead utilities, including wires, poles and guys, are not necessarily shown on the plans and shall be determined from the Contractor's visit to the site.

While the locations shown are believed to be reasonably correct, neither the Job Engineer nor the District can guarantee the accuracy or adequacy of this information. It shall be the responsibility of the Contractor to determine the exact location of all utilities and service connections thereto ahead of any excavations through marking by USA Underground Service Alert and by potholing. The Contractor shall make his own investigations, including exploratory excavations, referenced herein as potholing, to determine the locations and type of existing utilities, including service connections, prior to commencing work which could result in damage to such utilities or conflict with the grade or alignment of the new installation. The Contractor shall immediately notify the Job Engineer as required under Section 11-07, "Changed Conditions."

The Contractor shall be responsible for all damage to underground utilities, whether they are shown on the plans or not, or whether they have been potholed or not. The Contractor shall determine the location of all underground utilities and services through conferring with the utility companies and through potholing as described hereinbelow.

11-03 Utility Locations and Potholing. The Contractor shall, before proceeding with the work, call USA Underground Service Alert to have utilities marked on the ground by the various utility owners. The Contractor shall then confer with all agencies and utilities which have or may have aboveground and/or underground facilities in the vicinity of the work. The purpose of the conference shall be to notify said agencies and utilities of the proposed construction schedule and to locate and/or verify the locations of all facilities, including house connections in the area of the work.

As soon as the utility survey is completed and prior to fabrication of engineered pipe, the Contractor shall commence potholing to determine the actual location of the pipe, duct, or conduit. The Contractor shall uncover all underground utilities, including sewers and storm

drains. Underground utilities shall be uncovered to a point one (1) foot below the pipe, where crossing, interferences or connections are shown on the drawing, before the Engineer sets pipeline grades, the shop drawings are prepared or there is any trenching or excavating for any pipe or structure, in order to determine actual clearance elevations, i.e., outside the top and bottom of the pipeline or structure. Once uncovered, the Contractor shall record the depth of the utility at the pothole and clearly mark the depth on the pavement. Any variation in the actual elevations and the indicated elevations shall be brought to the Job Engineer's and District's attention. If the Contractor does not expose all required utilities prior to shop drawing preparation and trenching, he shall not be entitled to additional compensation for work necessary to avoid interferences, nor for repair to damaged utilities. Excavations around underground electrical ducts and conduits shall be performed using extreme caution to prevent injury or damage to workmen and the electrical ducts or conduits. Similar precautions shall be exercised around gas line, telephone, and television cables.

All potholes dug by the Contractor or his subcontractors for any reason shall be backfilled and compacted, and a minimum of two (2) inches of cutback shall be put down and compacted as temporary cover during construction.

11-04 Utility Relocations and Suspension of Service. Any utility relocations necessary for the work shall be coordinated with and/or performed by the owner of the respective utility. The Contractor shall also arrange for all necessary suspension of service and make arrangements to physically locate and avoid interference with all existing facilities. The Contractor may make arrangements for alterations for his sole convenience (not actually required to complete the sewer installation); such alterations shall be completely at the expense of the Contractor.

Where existing utilities and/or facilities, aboveground and/or underground, are encountered during construction, they shall not be displaced or molested unless necessary. If necessary to disturb or relocate a facility in the prosecution of the work, including accidental damage, the Contractor shall notify the owner or proper authority and shall abide with the requirements of and cooperate with such owner or authority (who may enter upon the work at any time) while protecting, repairing, replacing or relocating such facilities. All abandoned pipe lines that are severed during the work, shall be immediately plugged by the Contractor, with approved material (see Section 15), unless otherwise approved by the District.

All utility and other facility arrangements, agreements, permits, fees, locating, protection, repair, replacement, suspension of service, temporary relocations and other work in connection with utilities and other facilities, shall be the sole responsibility of and at the expense of the Contractor. Necessary permanent relocation of utilities and other facilities to accommodate the sewer construction, shall be the owner's responsibility.

11-05 Alignment Changes. In the event the Contractor requests a change in alignment to gain the advantage of reduced interference with utilities or other physical hazards and said change is agreed to by the District, the Contractor thereafter shall assume all responsibility for any

physical hazards encountered along the realigned route at no cost to the District. The costs of engineering, including surveys and administrative work, incurred by the District in connection with said requested change shall be paid by the Contractor.

11-06 Removal of Obstructions. The Contractor shall remove, or cause to be removed, at his expense, all trees, bushes, landscaping, fences and structures of all kinds, whether above or below ground, as and when required by the plans, or where the proper construction and completion of the work require their removal. The Contractor shall also remove at his expense, all rock, stones, debris, and all obstructions of whatsoever kind or character, whether natural or artificial, encountered in the construction of the work. However, no trees, plants, shrubbery or ornamental vegetation shall be removed without the consent of the District first being obtained, and suitable mutually agreeable arrangements made by the Contractor and the District for the replacement of such improvements. In addition, a permit from the City, Town or County shall be obtained for any necessary tree trimming or removal within public street rights-of-way.

Unless otherwise provided on the plans, in the Special Provisions or permitted by the District, all fences, trees, plants, lawns, ornamental shrubbery or vegetation, structures, walkways, driveways, and any other yard or street improvements which have been damaged by the Contractor's operations shall be completely replaced, repaired or restored by the Contractor, at his expense, to the satisfaction of the Engineer. Replacing, repairing, restoring shall be accomplished with materials of the same kind and quality as those of the original improvement.

Attention is directed to Section 8-21, "Easement Construction", for additional requirements for removal and replacement of obstructions within easements.

Any and all materials that are removed and are not to be incorporated in the improvement being constructed, shall be disposed of, off the job site, by the Contractor at his expense. Trenches or pits caused by the removal of existing improvements or obstructions shall be backfilled with suitable material designated by the District.

Existing improvements shown on the plans or required by the specifications or designated by the District to be salvaged, shall be carefully removed and stockpiled as directed by the Engineer.

Compensation for conforming to the requirements of this section shall be at no cost to the District.

11-07 Changed Conditions. In accordance with Section 7104 of the Public Contract Code, the Contractor shall promptly, and before the following conditions are disturbed, notify the Engineer, in writing, of any:

1. Material that the Contractor believes may be material that is hazardous waste, as defined in Section 25117 of the Health and Safety Code, that is required to be removed to a Class I, Class II, or Class III disposal site in accordance with provisions of existing law.

2. Subsurface or latent physical conditions at the site differing from those indicated.

3. Unknown physical conditions at the site of any unusual nature, different materially from those ordinarily encountered and generally recognized as inherent in work of the character provided for in the contract.

The Engineer shall promptly investigate the conditions, and if he finds that the conditions materially differ, or involve hazardous waste, and cause a decrease or increase in the Contractor's cost of, or the time required for, performance of any part of the work shall issue a change order under the procedures described in the contract.

In the event that a dispute arises between the District and the Contractor, whether the conditions materially differ or involve hazardous waste and cause a decrease or increase in the Contractor's cost of, or time required for, performance of any part of the work, the Contractor shall not be excused from any scheduled completion date provided for by the contract, but shall proceed with all work to be performed under the contract. The Contractor shall retain any and all rights provided for, either by contract of by law which pertain to the resolution of disputes and protests between the contracting parties.

Conditions shall not be deemed to materially differ if (1) the Contractor has failed to comply in any respect with the provisions herein, or (2) the Contractor has failed to make such independent investigations, tests or examinations as a prudent contractor would deem necessary to satisfy itself as to conditions to be encountered in the performance of the work.

11-08 Disturbance to Trees. When working in the vicinity of any trees, the Contractor shall comply with the requirements of City, Town, or County ordinances and the requirements set forth below.

Disturbance of trees, shrubs and planting and their root structures shall be held to a minimum. Trees with root structure disturbed during construction shall be protected, pruned, treated, and watered as specified below. Where shrubs and plantings must be disturbed, they shall either be removed and replanted or shall be replaced in kind and size. All work on trees and shrubs shall be performed by a licensed Arborist. The Arborist and all work performed on trees and shrubs is subject to the approval of the District. All costs of the Arborist and all work on trees and shrubs which are damaged shall be borne by the Contractor.

No trees are to be removed unless specifically called for on the plans or specified in the Special Provisions. All trees within the work area shall be protected with a temporary barricade.

1. Tree limbs overhanging the line of the work and in danger of being damaged by the Contractor's operations shall be trimmed by the Contractor. The Contractor shall also remove other tree limbs under the direction of the Engineer, so that the tree will present a balanced appearance.

2. All pruning and treating of trees shall be done by a professional arborist or established tree service whose operators are skilled in the care of trees, at the expense of the Contractor. The arborist or tree service selected shall be subject to approval by the District.

3. Where a tree to be left standing is so close to the work area that it could not be adequately protected during a conventional trenching operation, the Contractor shall employ an alternative method of excavation for the pipeline, such as tunneling or boring.

4. No tree roots shall be unnecessarily cut in excavating or trenching operations. Major roots, defined as roots two (2) inches or larger, which are encountered in the course of excavation shall be exposed but not severed, and they shall be wrapped in plastic as a protective measure while exposed. Any other roots that are cut shall be pruned cleanly so that jagged or torn ends do not exist. Where a root has been shattered or jaggedly cut, the Contractor shall dig back to a sound point, but as close as possible to the point of tearing, shattering or splitting, and prune the root cleanly.

5. If any trees or shrubs are damaged or destroyed, the Contractor shall compensate the District or property owner for their full appraisal value using the method described in the "Guide for Establishing Values of Trees and Other Plants," current edition, published by the ISA or obtain a letter from the property owner that the claim has been settled.

6. The removal of any trees, shrubs, fences or other improvements outside of sewer easements or rights-of-way as deemed necessary by the Contractor, shall be arranged with the property owner involved, and such improvements shall be removed and replaced, if required, by the Contractor at his expense.

11-09 Removal of Concrete or Masonry Construction. At locations described in the Special Provisions, or shown on the plans or where directed by the District, portions of existing concrete pavement, curbs, gutter, sidewalks, foundations, and other concrete or mortared structures or objects not shown or noted in the plans or mentioned in the Special Provisions, but encountered in the line of construction shall be removed where necessary and disposed of by the Contractor at his expense.

All concrete curbs, gutters, aprons, patios, driveways and sidewalks that are broken, cracked or damaged by the installation of the improvements shall be reconstructed by and at

the expense of the Contractor (see Section 20-15). The repairs shall be made by removing and replacing the entire portions between joints or by removing the damaged portions by concrete saw and not by merely refinishing the damaged part.

Concrete removal operations in connection with the alteration of an existing structure shall be performed without damage to any portion of the structure that is to remain in place. If damage occurs, the Contractor shall repair any such damage at his own expense, to the satisfaction of the District. Where existing reinforcement is to be incorporated in new work, such reinforcement shall be protected from damage and shall be thoroughly cleaned of all adhering material before being embedded in new concrete.

Unless otherwise provided in the Special Provisions or directed by the District, material removed as above specified shall be broken into pieces not larger than two (2) feet in greatest dimension and disposed of in a manner acceptable to the District.

Compensation for conforming to the requirements of this section shall be at no cost to the District.

11-10 Crossing Under Railroad, Highway or Utilities. When any railroad, highway, private or public utility is crossed, all precautionary construction measures required by the owner of the railroad, highway, or utility shall be followed by the Contractor. All necessary permits, licenses, bonds, and fees required for the crossings shall be obtained at no cost to the District. The Contractor shall give all notices necessary and incident to the work.

11-11 Coordination Of Work With Others. The Contractor shall coordinate his/her work with others to assure completion of the project in accordance with the Plans and Specifications.

11-12 Traffic Control. The Contractor shall provide a traffic control plan which must be reviewed and approved by the agency issuing the Encroachment Permit. The traffic control plan shall be approved one week before construction is planned. The traffic plan shall incorporate, but is not limited to, the following conditions:

A. One way traffic flow at a minimum shall be provided at all times when possible in the judgment of the District.

B. If in the determination of the Engineer that one way traffic flow cannot be established, the roadway may be closed. The roadway shall be reopened at intervals to provide no longer than 30 minute delays in traffic. The Agency issuing the Encroachment Permit shall be notified 24 hours in advance of all closures.

C. All work shall be controlled by a minimum of two flaggers when there is only one lane available for traffic.

D. Access to all out-of-project areas shall be maintained during Project construction.

E. The Contractor shall not terminate access through the area without providing adequate alternate routing for local traffic and emergency access. The Contractor shall provide additional trench plates to be put in place by the Contractor for emergency access when requested.

F. At the end of the day, any alternative route shall be made safe and clearly delineated.

11-13 Storm Water Pollution Prevention Plan (SWPPP). The Contractor shall prepare a Storm Water Pollution Prevention Plan (SWPPP) in accordance with the County of Marin requirements.

The intent of these provisions is to enforce federal, state, and other local agencies regulations designed to eliminate storm water pollution. Storm drains discharge directly to watercourses without treatment. Storm water pollution due to construction operations shall be controlled by keeping pollution out of storm drain systems, reducing the exposure and discharge of materials and wastes to storm water, and by reducing erosion and sedimentation.

In this Section, the term "storm drain system" shall refer to any storm water conduits, storm drain inlets amid other storm drain structures, street gutters, channels, watercourses, creeks, lakes, the bay or ocean.

A. Material Storage - The Contractor shall comply with the following practices for materials storage:

1. The Contractor shall propose designated areas of the project site, for approval by the Engineer, suitable for material delivery, storage, and waste collection that, to the maximum extent practicable, are near construction entrances and at least ten (10) feet away from catch basins, gutters, drainage courses, and creeks.

2. During wet weather or when rain is forecast within 72 hours, the Contractor shall store materials that can contaminate rainwater or be transported by storm water or other runoff to the storm drain system inside a building or cover them with a tarp or any other waterproof material secured in a manner that would prevent any of the materials from contacting the rainwater.

3. The storage and disposal of all hazardous materials such as paints, thinners, solvents, and fuels, and all hazardous wastes such as waste oil, must meet all federal, state, and local standards and requirements.

B. Street Sweeping - At the end of each working day or as directed by the Engineer, the Contractor shall clean and sweep roadways and on-site paved areas of all materials attributed to or involved in the work. The Contractor shall not use water to flush down streets in place of street sweeping.

C. Hazardous/Waste Management - The storage and disposal of all hazardous materials, such as pesticides, paints, thinners, solvents, and fuels, and all hazardous wastes, such as waste oil and antifreeze, shall comply with all federal, state, and local standards and requirements. When rain is forecast within 72 hours or during wet weather, the Engineer may prevent the Contractor from applying chemicals in the outside area.

D. Spill Prevention And Control - The Contractor shall take any and all precautions to prevent accidental spills during the Work under this contract. The Contractor shall keep a stockpile of spill cleanup materials such as rags or absorbents, readily accessible on-site. In the event of a spill, the Contractor shall immediately contain and prevent leaks and spills from entering the storm drain system, and properly clean up and dispose of the waste and cleanup materials. If the waste is hazardous, the Contractor shall comply with all federal, state, and local hazardous waste requirements.

The Contractor shall not wash any spilled material into the streets, gutters, storm drains, or creeks.

E. De-Watering Operations - All groundwater removed from the trench must be de-silted prior to discharging it into the storm drain system through filtering materials methods meeting the Association of Bay Area Governments (ABAG) Standards For Erosion & Sediment Control Measures and/or through methods and procedures described in the California Storm Water Best Management Practice Handbook - Construction Activity (latest edition).

The Contractor shall reuse the water for other needs, such as dust control and irrigation, to the maximum extent practicable. The rinse water shall be permitted to infiltrate in dirt area.

F. Pavement Saw-Cutting Operations - The Contractor shall prevent any saw-cutting debris from entering the storm drain system. The Contractor, preferably, shall use dry cutting techniques and sweep up residue. If wet methods are used, the Contractor shall vacuum slurry as cutting proceeds or collect all waste water by constructing a sandbag sediment barrier. The bermed area shall be of adequate size to collect all waste water and solids. The Contractor shall allow collected water to evaporate if the waste water volume is minimal and if maintaining the ponding area does not interfere with public use of the street area or create a safety hazard. If approved by the Engineer, the Contractor may direct or pump saw-cutting waste water to a dirt area and allow to infiltrate. The dirt area shall be adequate to contain all the waste water. After waste water has infiltrated, all remaining saw-cutting residue must be removed and disposed of properly. With the approval of the Engineer, the Contractor shall filter the saw-cutting waste water through filtering materials and methods meeting ABAG Standards for Erosion and Sedimentation Control Measures (latest edition) before discharging to the storm drain.

G. Pavement Operations - The Contractor shall prevent the discharge of pollutants from paving operations by using measures to prevent run-on and runoff pollution, properly disposing of wastes, and by implementing the following practices:

1. No paving during wet weather.

2. Proper Material Storage (refer to Paragraph 11.13A).

3. Cover inlets and manholes when applying asphalt, seal coat, tack coat, slurry seal, or fog seal.

4. Place drip pans or absorbent materials under paving equipment when not in use. During wet weather, store contaminated paving equipment indoors or cover with tarp or other waterproof covering.

5. If paving involves Portland cement concrete, refer to Paragraph 11.13H.

H. Concrete Operations - The Contractor shall prevent the discharge of pollutants from concrete operations by properly disposing of wastes, and by implementing the following practices:

1. Store all materials in waterproof containers or under cover away from drain inlets or drainage areas.

2. Avoid mixing excess amount of Portland cement material.

3. Do not wash out concrete trucks into storm drains, open ditches, streets, streams, etc. Whenever possible, perform washout of concrete trucks off site where discharge is controlled and not permitted to discharge into the storm drain system. For on site washout, locate washout area at least fifty (50) feet from storm drains, open ditches, or other water bodies, preferably in a dirt area. Control runoff from this area by constructing a temporary pit or bermed area large enough for the liquid and solid waste.

4. Wash out concrete wastes into the temporary pit where the concrete can set, be broken up and then disposed of properly. If the volume of water is greater than what will allow concrete to set, allow the wash water to infiltrate and/or evaporate, if possible. Remove or vacuum the remaining silt and debris from the pond or bermed area and dispose of it properly.

5. Dispose of waste water from washing of exposed aggregate to dirt area. The dirt area shall be adequate to contain all the waste water and once the waste water has infiltrated, any remaining residue must be removed. If a suitable dirt area is not available, then the Contractor shall filter the wash water through straw bales or other filtering materials meeting ABAG Standards For Erosion and Sediment Control Measures.

6. Collect and return sweepings from exposed aggregate concrete to a stockpile or dispose of the waste in trash container.

I. Grading And Excavation Operations - The Contractor shall implement sedimentation and erosion control measures to prevent sediments or excavated material from entering the storm drain system.

The erosion and sedimentation control materials and methods shall be in accordance with ABAG Standards for Erosion and Sediment Control Measures and/or the procedures and methods described in the California Storm Water Best Management Practices Handbook - Construction Activity (latest edition).

J. Vehicle/Equipment Cleaning - The Contractor shall not perform vehicle or equipment cleaning on site or in the street using soaps, solvents, degreasers, steam cleaning equipment, or equivalent methods. The Contractor shall perform vehicle or equipment cleaning, with water only, in a designated, bermed area that will not allow rinse water to run off-site or into the storm drain system.

The Contractor shall dispose of wash water from the cleaning of water base paint equipment and tools as hazardous waste.

If using oil based paint, to the maximum extent practicable, the Contractor shall filter the paint thinner and solvents for reuse, and dispose of any waste thinner, waste solvent, and sludge from cleaning of equipment and tools as hazardous waste.

K. Vehicle/Equipment Maintenance And Fueling - The Contractor shall perform maintenance and fueling of vehicles or equipment in a designated, bermed area or over a drip pan that will not allow run-on of storm water or runoff of spills. The Contractor shall use secondary containment, such as a drip pan, to catch leaks or spills any time that vehicle or equipment fluids are dispensed, changed, or poured. The Contractor shall clean up leaks and spills of vehicle or equipment fluids immediately and dispose of the waste and cleanup materials as hazardous waste.

The Contractor shall inspect vehicles and equipment arriving on-site for leaking fluids and shall promptly repair leaking vehicles and equipment. Drip pans shall be used to catch leaks until repairs are made. The Contractor shall recycle waste oil and antifreeze to the maximum extent practicable. The Contractor shall comply with Federal, State, and other local agencies for aboveground tanks.

L. Contractor Training And Awareness - The Contractor shall train all employees and subcontractors on the water pollution prevention requirements contained in these provisions. The Contractor shall inform all subcontractors of the water pollution prevention control requirements and include appropriate subcontract provisions to ensure that these requirements are met.

SECTION 12 REFERENCES TO STANDARD SPECIFICATIONS

12-01 State Standard Specifications. Whenever the words "State Standard Specifications" are referred to in the specifications, the reference is to the State of California, Business, Transportation and Housing Agency, Department of Transportation, (Caltrans) Standard Specifications, latest edition. All work shall be done in conformance with applicable provisions of the State Standard Specifications, except as modified in these Specifications and in the Special Provisions. Where the terms "State" or "Engineer" are used in the State Standard Specifications, they shall be considered as meaning the "District" as defined herein. In case of a conflict between these specifications and the State Standard Specifications, these specifications will apply.

12-02 County Specifications. Whenever the words "County Specifications" are referred to the specifications, the reference is to the Cities of Marin, and County of Marin, Department of Public Works, Standard Specifications dated June 1992 and Uniform Construction Standards dated June 1979.

SECTION 13 EARTHWORK

13-01 Description. Earthwork shall consist of performing all operations necessary to excavate earth, rock and/or other materials from the trench or excavation; to excavate all material, of whatever nature, necessary for the construction of foundations for structures, sewers, and drainage facilities; to construct embankments; to place backfill around structures, sewers and drainage facilities; and over sewers, culverts and drainage pipes; to backfill ditches, holes, pits and other depressions within the work area; to construct temporary and permanent trench surfacing; to remove unsuitable material and replace with suitable material; to construct earth protection dikes.

13-02 Encroachment Permits. For all work within public right of ways, the Contractor shall secure all necessary encroachment permits from the agencies having jurisdiction and shall comply with all requirements of the encroachment permits.

13-03 Compaction. Compaction of materials shall be defined as follows:

A. Relative Compaction refers to compaction of soil and aggregate base as defined by ASTM 1557-78.

B. Relative Density refers to the density of crushed rock as defined by ASTM D 2049-69.

13-04 Materials The Contractor shall provide and install all materials as shown on the drawings and/or as specified herein and as defined herein below.

A. Crushed Rock - Crushed rock shall be hard, sound and durable and shall not slake or disintegrate in water. One and one-half inch (1-1/2") crushed rock shall be uniformly graded with one hundred percent (100%) passing a 1-1/2" sieve and not more than five percent (5%) passing a 3/8" sieve. Three-quarter inch (3/4") crushed rock shall be uniformly graded with one hundred percent (100%) passing a 3/4" sieve and not more than five percent (5%) passing a 1/4" sieve.

B. Class 2 Aggregate Base - Class 2 aggregate base shall conform to Section 26, Aggregate Bases, of the State Standard Specifications, Paragraph 26-102 A. The grading shall be 3/4" maximum.

C. Lightweight Rock Fill - Lightweight rock fill shall weigh 60 pounds per cubic foot or less when compacted to 90% relative compaction. The rock sizes can be either 3/4 inch or 1-1/2 inch, except that within 6 inches of the slab, the rock size shall be 3/4 inches. The rock shall be compacted in 12-inch lifts with a lightweight vibratory compactor.

D. Slurry Cement Backfill - Slurry Cement Backfill composition and placement shall conform to Section 19 of the State Standard Specifications, Paragraph 19-3.06 B.

Slurry Cement Backfill shall be used to backfill any undermined areas and may be used as an alternate to Class 2 aggregate base for intermediate backfill to grade. Care shall be taken not to disturb the Slurry Cement Backfill after placement.

E. Structural Fill - Structural fill when specified for fill or structural backfill shall consist of excavated on-site soil and/or imported material (not bay mud). Excavated on-site soil or imported material to be used as structural fill shall be so prepared that it is free of unsuitable material as defined herein in Paragraph 13-04 F. and shall have a plasticity index of 20 or less and a liquid limit of 40 or less. Structural fill shall be capable of being compacted to the required relative compaction. A sample of the material shall be submitted for approval by the District prior to placement.

F. Unsuitable Material - Unsuitable material is material containing debris, roots, wood, vegetable matter, scrap metal, asphalt, plastic and rocks over 6" in greatest dimension.

G. Topsoil - Topsoil shall be imported commercially manufactured, fertile, friable, natural, productive soil containing a normal amount of humus and capable of sustaining healthy plant life. Topsoil shall be free of subsoil, heavy of stiff clay, rocks, gravel, brush, roots, weeds, noxious seeds, sticks, trash, and other deleterious substances. Soil shall not be infested with nematodes or with other noxious animal life or toxic substances. Soil shall be obtained from well-drained, arable land and shall be of an even texture. Soil shall not be taken from areas on which are growing any noxious weeds, such as Morning Glory, Sorrel, or Bermuda Grass.

H. Water - Water used for dust control and moisture conditions for compaction shall be reasonably free of objectionable quantities of silt, oil organic matter, alkali, salts and other impurities as determined by the District. Bay water or water from drainage ditches on the project site shall not be used. If available, reclaimed wastewater conforming to Health Department Requirements shall be used.

13-05 Trench Excavation and Backfill.

A. Trench Excavation - Trench excavation shall include the removal of all materials or obstructions of any nature, the installation and removal of all sheeting and bracing, and the control of water necessary to construct the work as shown on the plans. Excavation for sewers shall be made only after pipe and other necessary materials are delivered on the site of the work. After such delivery, trench excavation shall proceed as rapidly as possible and the pipe installed and the trench backfilled without undue delay. The District shall have the authority to limit the amount of trench to be opened or left open at any one time. In public street areas, excavation and pipe laying shall be coordinated to the end that a minimum of interference with public traffic will result.

In public street areas, excavation and pipe laying shall be coordinated so that the trench at the end of each day shall not be excavated for more than fifty (50) feet in advance of pipe laying, nor left unfilled for more than fifty (50) feet where the pipe has been laid for a total of one hundred (100) feet of trench under construction at any one time. During non-working hours, all trenches in public streets shall either be backfilled and temporarily paved or shall be shored and covered with steel plates suitable to carry H-20 traffic loads. The District may require the Contractor to submit engineering calculations demonstrating that the steel plates meet this requirement.

All temporary steel trench traffic plates shall be secured and flat on the road surface. Trench plates shall overlap the existing pavement by a minimum of 18" on each side of the excavation and shall be properly beveled with compacted AC at all edges to make a smooth surface between street level to steel plates for all traffic, including pedestrian, bicycles, skate boards, etc. All trenches and excavations shall be properly braced and shored before steel plates are placed. Lighted barricades and signs warning of uneven pavement shall be placed on either side of traffic plates.

Unless otherwise permitted by the Encroachment Permit, where trenching occurs in paved areas, the pavement shall be blade cut or scored and broken ahead of the trenching operations, and shall be saw cut (using a concrete saw) to a neat edge after backfilling and prior to paving. The proper tools and equipment shall be used in marking and breaking so that the pavement will be cut accurately and on neat lines parallel to the trench. Any pavement damaged outside these lines shall be re-cut along lines as directed by the District or agency having jurisdiction and restored at the expense of the Contractor.

Trenching may be accomplished by use of trenching machines, except where their use will result in damage to existing facilities. Trenching for all pipe shall, unless otherwise specified, be open cut to the lines and grades shown on the plans except those sections specifically indicated on the plans or designated by the District to be tunneled to protect existing trees or structures.

When the Contractor is digging in the vicinity of a sewer or utility, he shall carefully pothole, i.e., expose, for the sewer or utility.

Trenches shall be excavated below the barrel of the pipe to be installed and the bottom refilled with approved bedding material (as shown in the Typical Trench Section (SD 4).

B. Trench Width - The allowable width of trench shall be as shown in the Typical Trench Section (SD 4). Where shoring is required, the width of the trench shall be increased only by the thickness of the sheathing.

Trenches shall be excavated with full depth vertical sides where possible. Minimum vertical trench shall be from pipe flow line to a point two (2) feet above the top of pipe. Whenever the maximum allowable trench width is exceeded for any reason, the Contractor will be required, at his expense, to install special pipe, and/or concrete encasement, and/or special backfill as directed by the District.

C. Trench Bracing - Excavations shall be adequately shored and braced as necessary to protect workmen, so that the earth will not slide, move or settle and so that all existing improvements of any kind will be fully protected from damage.

The Contractor shall furnish, install, and maintain such sheet piling, timbering, lagging, and bracing, as necessary to support the sides of the trench. The protection of adjacent structures from movement of the ground and the elimination of the element of danger to life, property, or to existing improvements is the intent of this requirement.

All such piling, timbering, lagging, and bracing shall, unless otherwise required by the District, be removed during backfilling in such a manner as to prevent any movement to the ground or damage to the piping or other structures. When sheet piling, lagging, and bracing is left in place, such materials shall be cut off where designated and the upper part withdrawn.

Undisturbed material outside the planned excavation slopes, which is unstable and constitutes a potential slide, and material which has already come into the excavation, shall be removed.

The Contractor alone shall be responsible for the safety of his workmen and adjacent improvements and property. All shoring shall comply with Federal and State Safety Orders. Attention is directed to the "Trench Construction Safety Orders" of the California State Industrial Accident Commission which the Contractor is required by law to obey, and which are adopted by reference as a part of these specifications.

D. Control of Water - The Contractor shall remove all water which may accumulate in the excavation during the progress of the work so that all work can be done in a dry trench. The Contractor shall at all times have on hand sufficient pump equipment and machinery in good working condition for all ordinary emergencies and shall have available at all times competent mechanics for the operation of all pumping equipment. Trenches or other excavations shall be kept free from water while the pipe or structures are being installed, while concrete is setting, and until backfill has progressed to a sufficient height to anchor the work against possible flotation or leakage.

Water from excavations and trenches shall be disposed of in such a manner as to comply with all applicable Federal, State and local laws and regulations.

E. Temporary Diversion of Sewage. The Contractor shall maintain the flow of sewage past the work area at all times. Where the new sewer line is constructed in the alignment of the existing sewer, the Contractor shall pump the sewage around the work area during working hours. During nonworking hours, a temporary connection shall be made from the existing sewer to the new sewer. Laterals and sewers crossing the trench shall be temporarily reconnected until they can be connected to the new sewer. Discharge or bypassing of sewage to waterways is not permitted.

F. Disposal of Excess Excavated Material - All material excavated in streets, roadways, and rights-of-way, which is determined to be unsuitable for use as backfill or in excess of the amount required for backfilling, shall be removed immediately and disposed of at a legal disposal site. No stockpiling of excavated materials will be allowed at any time in public right of ways areas.

Where excavated material is specifically permitted to be used for backfill, it shall be laid away from the side of the trench to prevent caving or undue loading on the shoring and kept trimmed up so as to cause as little inconvenience as possible to the normal use of adjacent properties. Free access must be provided to all fire hydrants, water gates, meters, and private drives. Drainage ways shall be kept clear unless other provisions are made for handling drainage. In bay mud areas, excavated material must be kept well away from the edge of the trench to prevent heaving of the bottom of the trench.

G. Unsuitable Material - In advance of placing sewer pipe or structures, existing material within the area where such pipe or structures are to be placed, which is unsuitable as a foundation for the pipe, including but not limited to bay mud, soft material, vegetable matter, garbage and junk piles, either on the surface or buried, shall be removed and disposed of at a legal disposal site.

In rock excavation or a mixture of rock and earth excavation, such material shall be loosened and broken up for the full width of the trench so that no ribs, rocks, or solid projections will be within six (6) inches of the sewer pipe. The material thus broken up shall be removed and disposed of and the resulting space refilled with approved bedding material.

When unsuitable material is removed, the resulting space shall be refilled with 3/4" crushed rock or other approved material. In bay mud, 1-1/2" crushed rock shall be used to replace the unsuitable material.

H. Pipe Bedding and Pipe Zone Backfill - All pipelines shall be bedded in an approved bedding material as shown on Standard Drawing SD 4. The pipe bedding and pipe zone backfill material shall be placed uniformly on each side of the pipe to prevent displacement. In wet or unstable bedding conditions, 3/4" or 1-1/2" crushed rock shall be used.

All bedding materials shall be compacted to a minimum of ninety percent (90%) relative compaction, and materials shall be carefully handled to prevent intrusion of foreign materials.

Bedding and pipe zone material for main sewers shall be an approved granular material, free from vegetable matter and other deleterious substances, graded so that it will compact readily to form a firm, stable base when compacted, as shown on Standard Drawing SD 4. The use of sand for a pipe bedding or pipe zone backfill is not permitted.

Bedding material for building sewers shall be select granular material excavated from the trench, free of any organic matter, large clods or rocks. If the excavated material is determined to be unsuitable for bedding or pipe zone backfill, material similar to that specified above for main sewers shall be used.

The Contractor shall construct four (4) foot wide dams in pipe bedding and pipe zone backfill at 400-foot intervals using compacted clay or slurry cement backfill.

I. Intermediate Backfill - Intermediate backfill material shall consist of imported material or material excavated from the trench. All intermediate backfill material shall be free from vegetable matter, concrete, stones or clods larger than four (4) inches in diameter and other deleterious substances. The intermediate backfill material shall contain sufficient fines so that all voids will be filled when compacted, and shall be so constituted that the compaction requirements specified herein can be met. Sand is not permitted as intermediate backfill.

Intermediate backfill in public streets and highways shall be Class 2 Aggregate Base or shall otherwise conform to the requirements of the agency maintaining such streets and highways (i.e. the City, Town, County, Caltrans, etc.), but in no case will the requirements be less than those specified herein. Rounded or open graded aggregates, such as pea gravel, are not permitted for use as intermediate backfill. Use of native material for intermediate backfill within existing streets, or paved areas is not permitted. All backfill materials shall be placed and consolidated in such a manner as to permanently prevent damage to the pipeline, structure, roadbed, road surfacing and private property, or inconvenience to the public.

In the case of sewer work done under permit within new subdivisions, the installation and compaction of intermediate backfill shall be in accordance with the recommendations and specifications of the Developer's Soils Engineer, as approved by the District. If, for some reason, a soils report is not prepared which makes such recommendations and specifications, the minimum trench backfill requirements shall be those specified herein.

All intermediate backfill shall be compacted in such a manner as to obtain ninety percent (90%) relative compaction. Backfill material shall be placed in layers not exceeding eight (8) inches in loose depth and thoroughly compacted by tamping, rolling or otherwise to obtain the specified compaction.

Jetting of trenches to achieve compaction of backfill is not allowed.

The Soils Engineer hired by the Developer or, in the case of District projects, the Soils Engineer hired by the District shall take compaction tests to verify compliance with the requirements of the Agency exercising jurisdiction on the street or as required by the District.

13-06 Structure Excavation and Backfill.

A. General - Structure excavation shall consist of the removal, to the lines designated on the plans or specified or ordered by the District, of all material of whatever nature necessary for the construction of foundations and other excavations specifically designated on the plans or in these specifications or in the Special Provisions.

Structure backfill shall consist of placing and compacting, to the lines designated on the plans or specified or ordered by the District, backfill material around structures; and other backfill specifically designated on the plans or in these specifications or in the Special Provisions.

Structure excavation and backfill shall include the furnishing of all equipment and the construction or installation of all cofferdams and other facilities which may be necessary to perform the excavations and place and compact the backfill, and the subsequent removal of such facilities except where they are required or permitted by the plans or specifications to remain in place.

B. Excavation - All excavation for structures shall be done to the dimensions and levels indicated on the plans or specified herein. Excavation shall be made to such width outside the lines of the structure as may be required for proper working methods, the erection of forms, and the protection of the work. Care shall be taken to preserve the subgrade. If disturbed, the Contractor shall replace the disturbed subgrade with compacted, crushed rock fill or other material approved by the District in a manner which will show by test an equal bearing quality with the undisturbed subgrade.

The Contractor shall, where necessary, protect excavations from caving by shoring or similar protective measures shall be repaired by the Contractor at his own expense. All shoring shall be removed prior to the placing of concrete and/or backfill material, unless otherwise specifically authorized by the District.

The excavation shall be kept free of water while construction work is in progress and any water encountered during the process of excavation shall be controlled to the satisfaction of the District.

The Contractor shall notify the District when excavation for a structure is complete and no forms, reinforcing steel, concrete, pipe or backfill material shall be placed until the excavation has been approved by the District.

C. Cofferdams - Cofferdams for foundation construction shall be carried below the bottom of the footings and shall be braced and as water tight as practicable. The interior dimensions of cofferdams shall be such as to provide sufficient clearance for construction forms and, when no seal is placed, to permit pumping outside the forms.

In the judgment of the Contractor, if the clearance provided on the plans between the outside of the footing and any pile or interior wall or surface is not sufficient to permit the expeditious driving of piles or building of forms, he may provide such necessary clearances by constructing the cofferdams sufficiently large to provide such clearance as he may deem necessary. It shall be considered and is agreed that any such enlargement in excess of the outside dimensions of the footing as designed is for the sole purpose of expediting the work of the Contractor and quantities of such excavation and backfill will not be included in the quantities to be paid for.

Cofferdams which are tilted or moved out of position by any cause whatsoever during the process of sinking, shall be righted or enlarged so as to provide the necessary clearance and proper location and such work shall be at the sole expense of the Contractor.

In tidal waters or in streams at a time of probable flood, cofferdams, walls shall be vented at low water elevation to insure full hydrostatic head both inside and outside of the cofferdam during the period of pouring and setting of seals.

No shoring will be permitted in cofferdams which will induce stress, shock, or vibration in the permanent structure.

When permitted by the District, cross struts or bracing may extend through foundation concrete. Such struts or bracing below low water will be permitted to remain in place. Struts or bracing above low water shall be removed and the volume displaced filled with concrete of the same mix as that specified for the surrounding concrete.

For substructure work, the Contractor shall submit drawings showing its proposed method of shoring and cofferdam construction and other details left open to his choice or not fully shown on the plans. The type and clearance of cofferdams, insofar as such details affect the character of the finished work, will be subject to the approval of the

District, but the other details of design will be left to the Contractor, who will be responsible for the successful construction of the work.

After the completion of the substructure, the cofferdams with all sheeting and bracing shall be removed by the Contractor, at his own expense, to the level of the stream bed, or groundwater table, and such removal shall be performed in such a manner as not to disturb or mar the finished concrete or masonry.

D. Foundation Treatment - When a concrete or masonry footing is to rest upon rock, the rock shall be fully uncovered and the surface thereof shall be removed to a depth sufficient to expose sound rock. The rock shall be roughly leveled off or cut to approximate horizontal and vertical steps, and shall be roughened. The overcut of the rock shall be filled with concrete as a part of the structure, or, upon specific approval of the District, may be filled with compacted Class 2 aggregate base or crushed rock.

When piles are to be used, the Contractor, at his own expense will be permitted to excavate a sufficient distance below the bottom of the footing as shown on the plans to take care of swell due to driving piles. After the piles are driven, if it is found that the ground has risen above the planned grade, the Contractor shall remove such surplus material at his own expense. After the piles are driven, if it is found that the surface of the ground is below the planned grade, the Contractor shall backfill, at his own expense, to the planned grade with material approved by the District.

E. Disposal of Excess Excavated Material - All materials to be removed during the course of excavation in excess of that needed for backfill, or deemed by the District as being unsuitable for backfill, shall be hauled off the job site by the Contractor and disposed of at his own expense at a legal disposal site.

F. Inspections - In order to determine the character of the foundation material, the Contractor shall, if ordered by the District, dig test pits, and make test borings and foundation bearing tests.

Whenever any structure excavation is completed to the grade of the bottom of the footing shown on the plans, or set forth in the Special Provisions, or ordered by the District, the Contractor shall notify the District, who will make an inspection of the elevation and character of the foundation. No footing concrete or masonry shall be placed in a footing until the District has inspected and approved the elevation and character of the foundation for the footing.

G. Backfill - Structure backfilling operations shall conform to the requirements of this section, and any requirements specified in the Special Provisions.

Structural fill material shall conform to the requirements of Section 13.04 E.

The Contractor shall make his own arrangements for obtaining structure backfill material and all costs involved therewith shall be considered as included in the contract price paid for structure excavation, or for the structure being constructed.

Structure backfill shall not be placed until the structure footings or other portions of the structure or facilities to be below ground line have been inspected by the District and approved for backfilling. No backfill material shall be deposited against the outside walls of concrete structures until seven (7) days have elapsed from the pour or until the concrete has developed the strength of 2,500 pounds per square inch in compression as determined by a break of a test cylinder cured under conditions similar to those prevailing at the site and tested in accordance with standard methods.

Backfill materials shall be placed in uniform horizontal layers not exceeding eight (8) inches in loose thickness before compaction and shall be brought up uniformly on all sides of the structure or improvement in order to avoid bending or distortional stresses. Each layer of backfill shall be conditioned for optimum moisture as necessary and thoroughly tamped, rolled or otherwise compacted or necessary to achieve a relative compaction not less than ninety percent (90%).

13-07 Embankment Construction.

A. General - Embankment construction shall consist of the construction of fills, including the preparation of the ground areas upon which they are to rest: the construction of earth dikes for site protection; the placing and compacting of embankment material in holes, pits and other depressions within the work area.

B. Subgrade Preparation - The relative compaction of the natural ground area upon which embankments are to be constructed, for a depth of not less than two (2) feet below finished grade, shall not be less than ninety percent (90%).

When necessary to conform to the above compaction requirements, the natural ground shall be excavated and the excavated material or other material designated by the District, backfilled in the excavated area. The backfill material shall be placed in layers not to exceed eight (8) inches in loose thickness before compaction and each layer shall be compacted as necessary to achieve a relative compaction not less than ninety percent (90%).

When embankments are to be made and compacted on hillsides, or where new fill is to be compacted against existing embankments, the slopes of the original hillside, old or new fill, shall be cut into as the work is brought up in layers. Material thus cut out shall be recompacted along with the new fill at the Contractor's expense.

C. Embankment Materials - Wherever selection is possible, embankment material having a sand equivalent value of less than ten (10) shall be deposited in the lower portions of embankments and no such material shall be placed within two (2) feet of planned finished grade.

When the embankment material consists of large rocky material, or hard lumps such as hardpan or cemented gravel which cannot be broken readily, such material shall be well distributed throughout the embankment, and sufficient earth or other fine material shall be placed around the large material as it is deposited so as to fill the interstices and produce a dense compact embankment.

D. Compacting - Embankments shall be constructed in compacted layers of uniform thickness and each layer shall be compacted by means of approved compacting equipment in strict accordance with the Soils Engineer's recommendation. Jetting is not permitted.

At the time of compaction, the moisture content of embankment materials shall be such that the relative compaction specified may be obtained with the compacting equipment being used. Embankment material which contains less than the required moisture content shall be watered as necessary, and the water may be added to the material at the excavation site. Compaction of embankment material which contains excessive moisture shall not be commenced until material has been allowed to dry to such an extent that the relative compactions specified may be produced with the compacting equipment being used. At all times it shall be the responsibility of the Contractor to employ such means as may be necessary to secure a uniform moisture content throughout the material being compacted. Full compensation for any additional work involved in drying embankment material to the required moisture content shall be considered as included in the contract price paid for excavating the material and/or constructing the embankment and no additional allowance will be made therefor.

Embankments shall be maintained to the grade and cross section shown on the plans until the acceptance of the contract and the Contractor shall be responsible for the stability of all constructed embankments and shall replace any portions which have become displaced or damaged.

13-08 Temporary Paving. Temporary paving shall be a minimum of two (2) inches thick and rolled with a roller after placement. The temporary paving shall be maintained by the Contractor and shall be level with adjacent pavement in a safe and usable condition until permanent paving is installed. Temporary paving shall be placed at all locations where necessary to accommodate traffic. All temporary paving materials shall comply with the requirements of the Air Quality Management District.

SECTION 14 SEWER PIPELINES

14-01 Description. Sewer pipelines shall be installed as shown on the plans and in accordance with the following provisions, the Special Provisions, and as directed by the District.

14-02 Approved Sewer Pipe Materials. The approved pipe materials for laterals and for private side sewer/lateral construction are listed in Table 1 and approved pipe materials for public sewer mains and force mains are listed in Table 2. The specific use of pipe and pipe products is subject to approval by the District. Use of pipe other than those specified hereinbelow must be reviewed by the District and specifically authorized in writing. All pipe shall be of the size, materials, and strength classifications shown on the plans or specified herein.

TABLE 1
PRIVATE SIDE SEWER/LATERAL
(Specific Use Subject to District Approval)

Pipe Specifications	Can Be Used for Gravity Sewers	Can Be Used for Ejector Pump Discharge Pipelines
Ductile Iron Pipe w/Rubber Ring Joints, DIP	Yes [2]	No
PVC ASTM D-2241, SDR=26	Yes [1]	Yes [1]
PVC AWWA C-900, SDR=21	Yes [2]	Yes [2]
PVC Sch 40	Yes [1]	Yes [1]
PVC Sch 80	Yes [2]	Yes [2]
HDPE Pipe, min SDR=17	Yes [1]	Yes [1]

[1] Requires minimum 3-foot cover with imported bedding and pipe zone backfill.
[2] Requires minimum 18-inch cover on private property with imported bedding and pipe zone backfill or shaded with select native material containing rocks no larger than 1" sieve size.

TABLE 2
PUBLIC SEWER MAINS AND PUBLIC FORCE MAINS
(Specific Use Subject to District Approval)

Pipe Specifications	Can Be Used for Gravity Sewers	Can Be Used for Force Main Sewers
Ductile Iron Pipe w/Rubber Ring Joints, DIP	Yes	Yes
PVC ASTM D-2241, SDR=21	Yes	Yes
PVC AWWA C-900, SDR=18	Yes	Yes
PVC AWWA C-905, SDR=25	Yes	Yes
HDPE Pipe, Min SDR=21	Yes	Yes
Reinforced Concrete Pipe w/T-lock *	Yes	No
Pretensioned Concrete Cylinder Pipe	No	Yes

* For large diameter sewers only, i.e., 24" diameter and larger

14-03 Pipe and Joint Materials. All pipe sizes refer to inside diameter of pipe (including any pipe lining) and no pipe shall be more than one-eighth (1/8) inch smaller than its designated size.

All pipe and pipe joints between structures shall be of the same type, design, and size unless otherwise specified or permitted by the District. Care shall be exercised in the intermixing of different shipments of materials to insure well-fitted joints. All rubber gaskets and/or couplings for pipe joints shall be purchased from or through the firms supplying the pipe.

The Contractor shall submit shop and material details of all special pipe for approval of the District before the pipe shall be manufactured or used on the work, per Section 9. All pipes and fittings shall be marked with the trade or brand name of the manufacturer and inventory identification marks. All rubber gaskets shall be grease resistant.

A. Vitrified Clay Pipe and Fittings, VCP **(For Repair of Existing VCP Pipe Only)** - Vitrified clay pipe and fitting shall be new, first quality pipe and shall conform to ASTM C-700, as it applies to extra strength clay pipe and fittings, unglazed, and pipe fittings shall be of a quality equal to the straight pipe.

Joints for vitrified clay pipe and fitting shall be the mechanical compression type conforming in all respects to the standards of the pipe manufacturer. Resilient material used for jointing shall conform to the specifications of ASTM C-425. Rubber couplings

used to join plain end vitrified clay pipe shall conform to the material and performance requirements of ASTM C-594 with stainless steel shear bands.

B. Ductile Iron Pipe and Fittings, DI - Ductile iron pipe shall conform to ANSI/AWWA C151/A21.51. All ductile iron pipe shall have a seal coated cement lining of one-sixteenth (1/16) inch minimum thickness for pipe up to twelve (12) inches in diameter, and three-thirty seconds (3/32) inch up to twenty-four (24) inches in diameter, and one-eighth (1/8) inch above twenty-four (24) inches in diameter in accordance with ANSI A21.4.

All ductile iron pipe and fittings installed underground shall have bell and spigot ends, employing a single elongated rubber gasket, "Tyton" or push-on type joint, to effect the seal. Pipe and specials shall be of the diameter and class shown on the plans, or as specified. Unless otherwise noted, all ductile iron specials and fittings shall conform to ANSI C153/A21.53 specifications. Where required on the plans, joints on buried pipelines shall have an internally locking rubber ring joint. Lead joints will not be permitted unless specifically approved by the District.

All ductile iron pipe which is installed in the ground shall be provided with polyethylene encasement conforming to AWWA Specification C105-72. Polyethylene encasement shall be placed in accordance with the recommendations of the pipe manufacturer. Polyethylene envelopes shall be carefully placed and lapped, and care shall be exercised so that soil is not placed against the pipe.

Exposed piping in pump stations or other structures shall installed with flanges. All flanges shall be of the thickness specified in the American Standard for Flanged Fittings, ASA B16.1, Class 125, as adopted by the American Society of Mechanical Engineers. Flanges shall be accurately faced. They shall be at right angles with the pipe axis. All bolt holes shall straddle the vertical axis and shall be one-eighth (1/8) inch larger than the respective bolt diameters. Flanges on built-up spools shall be re-faced after mounting.

Bolts, nuts and washers shall be made of Type 316 stainless steel and shall have sound well-fitting threads. Bolts shall be provided with hexagonal chamfered heads and nuts. The underside of all bolt heads and nuts shall have true surfaces at right angles to the axis of the bolts. The lengths of the bolts shall be such that, after joints are made up, the bolts shall protrude through the nuts, but in no case shall they protrude more than 1 and one-half (1½) threads. Threads shall be lubricated with Led-plate or equal thread compound.

C. Reinforced Concrete Pipe, RCP - Reinforced concrete pipe shall conform to ASTM C-76 and, unless otherwise indicated on the plans, in the Special Provisions or directed by the District, shall be Class IV, (2000 D) designed for a head of at least twenty five (25) feet,

and the pipe shall be centrifugally cast. D Loadings will be noted on the plans, and joint design shall conform to AWWA C-302, Section 3.3 as modified herein:

1. The joint shall be the all concrete bell and spigot type, unless otherwise specified in the Special Provisions or permitted by the District in writing.

2. The gasket shall be confined in a groove formed in the outside surface of the spigot end of the pipe.

3. The pipe shall be manufactured with Type II Cement.

4. Rubber gaskets used for jointing reinforced concrete pipe shall conform to Section 3.4 of AWWA C-302. Rubber gaskets conforming to ASTM C-361 require prior written approval of the District.

5. All RCP pipe 24" in diameter and larger shall be lined with PVC flexible sheet liner "T-Lock" lining as manufactured by Ameron.

D. Reinforced Concrete Water Pipe - Steel Cylinder Type, Pretensioned - Reinforced concrete water pipe-steel cylinder type, pretensioned, referred to pretensioned concrete cylinder pipe, shall conform to the following specifications:

1. Material, Manufacturing Operations, Testing and Inspection - All material, manufacturing operations, testing and inspection of the pipe shall be in conformance with the requirements of AWWA Standard C303, "Reinforced Concrete Water Pipe-Steel Cylinder Type, Pretensioned," except as modified herein. The following acceptable minimums shall apply:

   a. Wire rod reinforcement shall have a minimum spacing of 2.3 x wire rod diameter.

   b. The cross-sectional area of the rod shall not exceed 50% of the total areas of rod and cylinder steel.

   Except for specials required to meet the laying conditions, pipe will be furnished in standard lengths suiting the manufacturer's shop practice and in accordance with Section 3.1.2 of AWWA Standard C303.

2. Joint Design - The standard field joint shall be steel joint rings with rubber gaskets as per AWWA Standard C303 Sections 3.3 and 3.4. Rubber gaskets shall be grease resistant. In addition, the following pipe ends may be required as shown on the drawings.

a. Ends for mechanically coupled field joints shall conform to Section 3.6.1 of AWWA C200.

b. Ends fitted with butts traps for field welded joints shall conform to Section 3.6.5. of AWWA C200.

c. Ends of the bell and spigot type for field welded joints shall conform to Section 3.6.2 of AWWA C200.

d. Plain ends fitted with flanges shall conform to AWWA C200 Section 3.6.7 and AWWA C207.

3. Restrained Joints - Where indicated on the drawings and where thrust is evident, welded joints are required. Welding of joints shall conform to the details shown in the plans.

4. Pipe Design Criteria - Pretensioned concrete cylinder pipe shall be designed in accordance with APPENDIX A of ANSI/AWWA C303 to withstand a minimum 150 psi internal pressure and calculated soil pressures together with external AASHTO H-20 track loading.

5. Bonding and Electrical Conductivity - All unwelded pipe joints shall be bonded for electrical conductivity in accordance with the details shown.

6. Protection of Appurtenances - All buried flanges, valves, couplings shall be coated with a minimum thickness of one inch of cement mortar having one part cement to not more than two parts plaster sand.

   All exterior surfaces which will be exposed to the atmosphere inside structures or above ground shall be thoroughly cleaned and coated according to the requirements of "Protective Coatings" Section 19.

7. Fittings and Openings - Special and standard type fittings which include bends, reducers, outlets, manholes, etc., shall be designed to a strength at least equal to the adjacent pipe and to conform to Section 4 of AWWA Standard C303 and the dimensional requirements of AWWA C208.

8. Internal Bracing and End Protection - Prior to delivery, pipe end covers and end/internal bracing shall be applied, as recommended by the manufacturer, for shipping and storage protection.

9. Shop Drawing Submittals - The manufacturer shall provide drawings in accordance with Sections 1.6 of AWWA Standard C303.

E. Polyvinyl Chloride Pipe, PVC - As designated on the plans, PVC pipe shall conform to one of the specifications below. PVC pipe with external ribbing is not allowed.

1. PVC, ASTM D-2241 (Pressure Pipe) - PVC, ASTM D-2241 pressure pipe shall conform to ASTM D-2241 with rubber ring joints and shall have a pressure rating of 160 psi unless otherwise indicated on the plans. Joints shall meet the requirements of ASTM D-3212.

2. PVC, C-900 or C-905 (Gravity Sewer and Pressure Pipe) - PVC, C-900 or C-905 gravity sewer and pressure pipe shall conform to AWWA C-900 for diameters 4" through 12" and AWWA C-905 of pipe diameters 14" thru 20" and shall have a SDR = 25, unless otherwise indicated on the plans. Joints shall be bell and spigot conforming to ASTM D-3139 with gaskets conforming to ASTM F-477.

   All fittings for PVC, C-900 pipe shall either be fabricated or manufactured in one piece of injection molded PVC compound meeting ASTM C-1784. Fittings shall be Class 150 and conform to requirements of SDR = 18. Fittings shall be designed to withstand a minimum of 755 psi quick burst pressure @ 76•F tested in accordance with ASTM D-1599.

3. PVC, Schedule 40 or Schedule 80 - Schedule 40 and Schedule 80 PVC pipe and fittings shall be Type I, normal impact, rigid polyvinyl chloride conforming to the Department of commerce Commercial Standard CS 207-60, or currently applicable revisions of that standard. The pipe shall be rigid, tough, lightweight, thermoplastic pipe, UV protected, furnished in iron pipe sizes. Fittings shall be molded of the same material as the pipe. Joints shall be solvent welded or bell-and-spigot with 3/16" Neoprene or plasticized PVC gaskets.

F. HDPE Pipe - Polyethylene pipe shall be made from polyethylene resin compound qualified as Type III, Category 5, Class C, Grade P34 in ASTM D-1248-78. This material shall have a Long-Term Hydrostatic Strength of 1450 psi or 1600 psi when tested and analyzed by ASTM D-2837. Minimum thickness shall be DR=17.

The raw material shall contain carbon black, well dispersed, with a minimum of 2%. Additives which can be conclusively proven not to be detrimental to the pipe may also be used, provided the pipe produced meets the requirements of this standard.

The pipe shall contain no recycled compound except that generated in the manufacturer's own plant from resin of the same specification from the same raw material supplier.

The cell classification shall be PE 33443 - C (10 MPa) for PE 3407 materials or PE 345534C for PE 3408 materials, per ASTM D-3350/F 714-81.

Pipe sections shall be heat fused together. Only those tools specifically designed for joining polyethylene pipe and only those personnel approved by the pipe supplier and District shall join polyethylene pipe.

G. Encasement Pipe - When designated on the plans, permit, or by the District in writing, approved encasement pipe shall be placed in a bored hole under the area to be crossed. The encasement pipe shall be plain steel and shall be of the length, diameter and thickness specified on the plans or in the Special Provisions. Plain metal pipe shall conform to the requirements of AWWA C-201 or AWWA C-202 for steel water pipe, butt welded and shall conform to the thickness given in the following table:

Protective Casings

Inside Diameter inches	Smooth Steel Thickness inches
18	1/4
21	1/4
24	1/4
30	5/16
35	5/16
48	not permitted
54	not permitted
60	not permitted

14-04 Backflow Prevention/Relief Valve. Backflow prevention/relief valve shall be Contra Costa Type or Plumbest or equivalent as approved by the District. The backflow preventer/relief valve shall be installed at an elevation at least six (6) inches lower than the lowest home fixture as approved by the District. If the backflow preventer/relief valve cannot be installed six (6) inches below the lowest fixture then a PVC check valve shall be installed in the lateral.

14-05 Flexible Couplings for Pressure Lines

A. Flexible Couplings - Flexible couplings used for connection of sections of pipe having identical outside diameters shall be Rockwell Type 411, Dresser Style 38, or equal. Flexible couplings for connections of cast iron pipe having slightly different outside diameters shall be Rockwell Type 413, Dresser Style 162, or equal. Coupling gaskets shall be Rockwell Grade 60, Dresser Grade 42, or equal. Buried couplings shall have Type 316 stainless steel bolts, nuts and washers.

B. Flanged Coupling Adapters - Flanged coupling adapters shall be Rockwell Type 912, Dresser Style 127, or equal, complete with Type 316 stainless steel bolts, nuts and washers. All flanged coupling adapters shall be provided with anchor studs or joint harness bolts and lugs to prevent joint separation, as approved by the District.

Restraints shall be designed for 1-½ times the maximum working pressure of the applicable service.

C. Coatings for Flexible Couplings - All flexible couplings and flanged coupling adapters shall be fusion epoxy coated in accordance with the requirements of Paragraph 14-07 this section. Bolts, nuts and washers shall be Type 316 stainless steel. After installation, epoxy resin touch-up shall be applied to damaged coating. On underground lines, the flexible coupling and bolts shall be wrapped as specified in Paragraph 14-06.

14-06 Valves

A. Eccentric Plug Valves - Plug valves shall be non-lubricated eccentric plug valves conforming to the following requests:

1. Type - Eccentric Plug Valves shall be of the non-lubricated eccentric type with an elastomer covering all sealing surfaces. The elastomer shall be suitable for sewage service. Flanged valves shall be manufactured in accordance with ANSI B16.1 Class 125/150, including facing, drilling and flange thickness. Ports shall be round with a minimum of 81% port area on sizes 2½" through 12" to facilitate "pigging" when required. Valves 14" and larger shall be of a rectangular port design with a minimum of 81% port area.

2. Valve Bodies - Valve bodies shall be of ASTM A-126 Class B cast iron in accordance with AWWA C-504-87 Section 5.2.1. Valves 3" and larger shall be furnished with a welded-in overlay seat of not less than 90% nickel in accordance with AWWA C-507-85 Section 3.2.3.5. Sprayed, plated or screwed-in seats are not acceptable.

3. Plugs - Plugs shall be of ASTM A-536 Grade 65-45-12 in compliance with AWWA C-504-87 Section 2.2.2. The plugs shall be of one piece solid construction with PTFE thrust bearings on the upper and lower bearing journals to reduce torque and prevent dirt and grit from entering the bearing and seal area.

4. Bearings And Seals - Valves shall be furnished with replaceable sleeve type bearings conforming to AWWA C-504-87, Section 3.6.1 and AWWA C-507-85, Section 3.2.4. Bearings shall be of sintered, oil impregnated type 316 stainless steel ASTM A-743 Grade CF-8M. Valve shaft seals shall be of the "U" cup type in accordance with AWWA C-504-87, Section 3.7.2. Seals shall be self adjusting and repackable without removing the bonnet from the valve.

5. Shutoff - Valves shall be designed and manufactured to shut off bubble tight at 175 psi for valves 2½" through 12" and at 150 psi for valves 14" through 36". Valves 42" and larger shall be certified bubble tight at 125 psi.

6. Test - Each valve shall be given a hydrostatic and seat test with certified test results. Certified copies of Proof-of-Design test reports shall be furnished as outline in AWWA C-504-87, Section 5.2.4 when requested.

7. Manufacturer - Plug valves shall be Millcentric Series 601/600 as manufactured by Milliken Valve Company of Bethlehem, Pennsylvania.

8. Operator - Wrench operated valves 2½" – 8" shall be capable of being converted to worm gear or automated operation without removing the bonnet or plug from the valve. All wrench operated valves shall be equipped with a 2" square nut for use with removable levers or extended "T" handles.

   Worm gear operators, where required, shall be of heavy duty construction with the ductile iron quadrant supported on the top and bottom by oil impregnated bronze bearings. The worm gear and shaft shall be manufactured of hardened steel and run on high efficiency roller bearings.

   Provide operators for all valves. Valve rotation shall be counterclockwise (to the left) to open and the word "OPEN" and an arrow indicating the direction to open shall be cast on each valve body or operator.

   Lever operators shall have a maximum pull of 80 lb. and shall be capable of withstanding a 200 lb. pull without damage. Wrench nuts shall conform to AWWA C500, Section 19 and shall be capable of withstanding a 300 ft.-lb. torque without damage. Extension stems shall be provided where indicated on drawings, specified, required for proper operation and for buried valves with operating units more than three (3) feet below grade. Stem guides shall be cast iron, bronze bushed and adjustable in two (2) directions. If extension stem length exceeds ten (10) feet or the weight exceeds twenty (20) pounds, the top guide shall be designed to carry the stem weight and provide a collar on the stem to bear against the thrust guide. The maximum spacing of non-rising stems shall be one hundred (100) times stem OD with a ten (10) foot maximum.

   Buried valves shall be provided with a stem extending to within six inches (6") of grade. Provide spaces to center stem in valve box and provide wrench nut.

9. Coating - Provide shop applied coating of rust resistor primer and Tnemec Series 69 high build epoxy 12 mils thickness inside and outside.

B. Iron Body Swing Check Valves - Check valves 2" to 12" shall be designed for working pressures of 200 pounds Cold W.O.G., non-shock and shall conform to the following Standard Specifications, latest edition:

   A.S.A. B-16.10 Section applying to 125 lb. Cast Iron Swing Check Valves.
   A.S.A. B-16.1 Cast Iron Pipe Flanges & Flanged Fittings, Class 125.
   A.P.I. Standard No. 6-D, for 175 lb. Pipe Line Swing Check Valves.

Hinge pins shall be stainless steel. Metal discs shall be prevented from sticking or wedging in open positions by stops. Discs shall be mounted allowing free movement of the disc to rotate assuring uniform seat wear. Check valves shall be designed with inclined seat making them suitable for use in either a horizontal or vertical position. Swing check valves 4" or larger shall be provided with external lever and spring for the balancing of the gate appropriately to operating conditions.

C. Air Release Valves

Sewage air release valves shall be equivalent in workmanship, materials, and functional characteristics to ARI Model D-020 combination air valve for sewage or Model D-025 short version.

14-07 Protective Coatings - All metal valves, fittings, couplings, bolts, and nuts buried underground shall be protected from corrosion by applying a primer Polyken 927, or Tapecoat color primer, or equal, and wrapping with polyethylene tape Polyken 930, or Tapecoat CT, or equal. Exposed metal fittings, valves, etc. in manholes or valve boxes shall be coated with two (2) coatings Tapecoat Mastic, Koppers Bitumastic No. 505, or equal. Surfaces shall be thoroughly cleaned before application. All coatings shall be applied in strict conformance with instructions of the manufacturer.

14-08 Fusion Epoxy Coating - Where required, steel pipe and fittings, valves, gates, and equipment shall be lined and/or coated with epoxy resin by the fluid bed process as specified hereinbelow.

The lining and coating material shall be a one-part, heat curable semi-flexible thermosetting light green epoxy resin powder designed for application on preheated surfaces by fluid bed process, Scotchkote 206N, as manufactured by 3M Company. Alternate coating equivalency test results shall be submitted to the satisfaction of the District at the expense of the Contractor.

Metal surface shall be prepared by blasting sand or grit to a uniform white metal appearance. All rough surface or pitted areas shall be ground smooth.

The lining and coating shall be applied within eight (8) hours of sand blasting operations. The cleaned fitting shall be preheated and maintained at the required coating temperature during the lining and coating process. Application shall be by the fluidized bed process. The finished lining and coating thickness shall be not less than 15 mils. The freshly coated fitting shall be post-heated in a suitable oven immediately following the coating application of a sufficient time to insure complete cure of the epoxy resin.

The epoxy coating and lining shall be uniform in film thickness without bare or thin spots, runs or sags, pinholes or other defects.

The epoxy application shall be proven by the following tests:

1. Adhesion Test: (a) Immersion of a 2" x 6" sample in boiling water for four (4) hours, (b) immersion of a 2" x 6" sample in 150••water for ninety-six (96) hours. No signs of blisters, bubbles, peeling, or other forms of separation of coating shall be found.

2. Wet Sponge Holiday Detector Test. The lining shall be free of pinholes as tested by low voltage wet sponge Holiday Detector.

The application of the dry powder fusion epoxy resin shall be done only by experienced and skilled craftsmen. The manufacturer shall submit a certificate that the fitting meets, in all respects, the requirements of these specifications.

Coating damaged in the field shall be restored with a 100% solids room temperature curing epoxy resin, compatible with the fusion epoxy coating and applied in accordance with the recommendation of the manufacturer.

14-09 Conventional Pipeline Installation.

A. Main Sewer and Trunk Sewer Pipe Laying - All pipe shall be laid to conform to the prescribed line and grade as shown on the plans. The pipe grade shall be set from the grade stakes using a laser. The grade line shall be established before any pipe is laid in the trench. Each pipe length shall be checked for conformance to the grade line.

Trench width, pipe bedding, pipe zone backfill and special laterals should conform to the plans and the Standard Drawings herein.

As the work progresses, the interior of the sewer shall be cleared of all dirt and debris of every description. Where clearing after laying is difficult because of small pipe size, a suitable swab or squeegee shall be kept in the pipe and pulled forward past each joint immediately after jointing has been completed.

Unless otherwise approved by the District, the sewer line shall be laid without break upgrade from the point of connection to existing sewer and with the bell end forward or upgrade. Pipe shall not be laid when the condition of the trench or the weather is unsuitable. When pipe laying is not in progress, the forward end of the pipe shall be kept effectively closed with an approved temporary watertight plug.

Each length of pipe shall have full bearing for its entire length and adequate bell holes shall be dug at each end of the pipe. Adjustments of pipe to line and grade shall be made by scraping away or filling in and tamping the bedding material under the body of the pipe. No wedging or blocking to support the pipe will be permitted.

Unsuitable subgrade material shall be excavated and stabilized with crushed rock to provide a firm bedding for the pipe or as recommended by the Soils Engineer.

For curved sewers, the deflection in the joint between any two successive pipe sections shall not exceed eighty percent (80%) of the maximum deflection as recommended by the pipe manufacturer. Minimum two (2) foot pipe lengths may be supplied or pipe may be cut, if approved joint material is available, to install short radius curves and to conform with the joint deflection limitations.

Sewer pipes, branches, stubs, or other open ends which are not to be immediately connected, shall be plugged or capped with a standard watertight plug or cap, as approved by the District for use in the particular installation. The plug or cap shall be placed on a standard end. Open pipe ends on which rodding inlets, flushing inlets, etc., are to be constructed shall be plugged at all times until the structure is completed and the cover in place.

All sewer line connections to manholes, trunk sewers, main sewers, or side sewers shall be left uncovered until after the inspection has been made. After approval of the connection, the trench shall be backfilled as specified.

If the sewer is to be laid in an area that is to be filled and the cover prior to filling is less than four (4) feet, the pipe shall not be laid until the area has been filled to a level of four (4) feet above the proposed pipe and compacted to ninety percent (90%) relative compaction unless otherwise authorized by the District.

The markings on reinforced concrete pipe indicating the minor axis of the elliptical reinforcement shall be placed in a vertical plane when the pipe is laid in place.

B. Side Sewer Pipe Installation - All side sewer pipe shall be laid in conformance with the requirements set forth herein for sewer mains and trunk sewers and to the following requirements.

All side sewers shall be equipped with clean outs, backflow prevention devices, and test fittings required in the Uniform Plumbing Code, by District Ordinance, and as shown in the Standard Drawings herein.

C. Pipe Jointing - All pipe jointing shall be accomplished by using the proper types of jointing materials as specified in Section 14-03 and in a manner conforming to the methods hereinafter specified and in accordance with the manufacturer's prescribed installation procedures.

D. Jointing of Dissimilar Pipes - Jointing of dissimilar pipes shall be accomplished with approved special couplings or adapter. The jointings of vitrified clay and cast iron pipe may be accomplished by using an approved Fernco Coupling, Calder Coupling, Band Seal Coupling, or other special approved couplings. All couplings shall have stainless steel shear bands.

E. Connections to Existing Sewerage Systems - It shall be the responsibility of the Contractor to determine the exact location and depth of the existing sewers prior to the installation of any sewer pipe. In the case of side sewer work, the Contractor shall also determine the elevation of the plumbing outlet at the building to be connected and decide whether the required grade and cover can be maintained between the outlet and the main sewer prior to construction of any portion of the side sewer. Where the connection is to be made in an existing manhole, the Contractor shall make the connection by carefully breaking through the manhole wall, cutting the floor or concrete base, installing the pipe through the wall with minimum 1-1/2" and maximum 2" protrusion, and forming a new channel, and repairing and damage to the structure. The floor and channel of the manhole shall be finished with a smooth finish. Where the connection is to be made by constructing a new manhole on an existing sewer, the connection and manhole shall conform to the details shown on the Standard Drawings.

1. Main Sewers - Connection of main sewers and trunk sewers shall only be made in manholes, or special structures.

2. Side Sewers - Where wyes, tees and/or laterals were previously installed on the main sewer, the side sewer or building sewer shall be connected to the wye, tee, or lateral as provided for the particular connection. Where a wye, tee, or lateral has not been installed at the point of desired connection, either a standard wye or tee fitting shall be "cut-in" to the main sewer using approved couplings and fittings of the same material as the main sewer, or the connection shall be made using the slope of the last twenty (20) feet of a side sewer connecting to a sewer main. This slope shall be less than 30••from the horizontal. A "Tap Tite", "Inserta Tee" or equal method may be used. Inserta Tee may only be used on sewer mains 12" in diameter or larger.

F. Special Jointing Requirements in Filled Ground - Where construction takes place in filled marsh land or areas underlain by bay mud, or any other areas which in the judgment of the District are subject to possible subsidence or differential settlement, special pipe jointing will be required for pipe entering and leaving manholes or structures. When indicated on the plans or in the Special Provisions or directed by the District, all sewer lines smaller than twelve (12) inches entering and leaving manholes or structures shall have two (2) approved flexible joints within four (4) feet of the manhole base or structure, with not less than twelve (12) inches between joints. All sewer lines twelve (12) through eighteen (18) inches shall have one (1) approved flexible joint within twelve (12) inches of the manhole base or structure.

G. Force Main (Pressure Sewer) Pipe Installation - Force main pipe shall be laid in conformance with the requirements set forth herein for main and trunk sewer pipe, and to the following requirements.

Unless joints are otherwise restrained concrete thrust blocks shall be provided on all force main bends having a deflection angle of eleven (11) degrees or more, and at elbows, tees and valves. Thrust blocks shall have a sufficient bearing area to withstand the maximum force to be exerted. For cement lined and coated steel pipe, pipe joints may be welded one hundred (100) feet either side of the bend in lieu of providing a concrete thrust block.

Unless otherwise specified on the plans, in the Special Provisions or directed by the District, all valves to be installed in force mains shall be plug valves as specified in Section 14-05A. Unless otherwise shown on the plans each valve shall correspond to the size of the run of pipe on which it is to be installed.

Force main valves shall be installed in accordance with Standard Drawing No. SD 14. The cover shall be marked with the word "sewer." An extension stem, valve wrench and all materials and equipment necessary for easy and proper valve operation shall be supplied. Proper clearance shall be provided between the riser and the cover of the box so that traffic loads will not be transferred to the valve or pipe.

14-10 Trenchless Sewer Installation - When shown on the Plans and as specified in the Special Provisions, sewer pipe may be installed by trenchless methods as specified herein below:

A. Boring and Tunneling - Where an encasement pipe is bored or jacked under a street, highway, or railroad, the pipe and construction methods shall conform to the requirements of the agency with jurisdiction over the street, highway or railroad.

1. Bores - Where an encasement pipe or sewer pipe is installed in a bored hole, whether wet or dry, the hole shall be bored by use of a machine which will cut a true circular bore to the required line and grade. Bored tunnels shall be no more than two (2) inches larger in diameter than the maximum outside diameter of the encasement pipe or sewer pipe to be placed therein. Main or side sewer pipes installed in bores without encasement pipes shall be ductile iron, Class 50, unless otherwise specified in the Special Provisions or directed by the District.

   After the main and side sewer pipe is secured in place, the space around the pipe shall be completely filled with sand or grout as directed by the District.

2. Tunnels - Where tunnels without encasement pipes are required or permitted, they may only be drilled with approved equipment which will cut a true circle on grade to a diameter not greater than two (2) inches larger than the greatest diameter of the sewer pipe, or they may be excavated by standard tunnel methods using shoring, lagging and adequate support, where necessary.

3. Installation - The encasement pipe shall be installed by jacking or tunneling in such a manner as not to interfere with the utility, railroad track, street or highway being crossed. Sufficient jacking capacity shall be provided in advance to insure successful completion of the operation. Guide rails shall be accurately set to the

line and grade so that the pipe, while being jacked, will be guided along the prescribed line and grade. A rigid backstop shall be erected to withstand the full thrust of the jacks during the process of installing the pipe. Jacks and bearing frame with necessary blocking shall be provided of sufficient strength and number to propel the pipe forward as excavation progresses ahead of the forward end of the pipe.

If a void develops between the encasement pipe and the surrounding soil, the void shall be completely filled with grout as directed by the District or as directed by the agency with jurisdiction over the street, highway or railroad.

4. Blocking Carrier Pipe - After the casing has been installed, two (2) redwood skids of appropriate cross-sectional dimensions, running the full length of each pipe section, shall be strapped securely to each section of sewer pipe and each section shall then be pushed or pulled into the encasement pipe after jointing. The skids shall be tapered as necessary to assure proper sewer grade. Extra care shall be taken to insure proper pipe jointing since a misplaced rubber joint ring would be extremely difficult to correct once the pipe has entered the casing. Appropriately sized redwood blocks shall also be secured at suitable intervals to each piece of sewer pipe to prevent the possibility of the pipe floating within the casing. Exact details of installation, including all redwood skid and block sizing and spacing shall be submitted by the Contractor for specific approval of the District well in advance of starting this work.

5. Filling Annular Space - After the pipeline has been cleaned and tested in accordance with Section 14-10, the space between the pipe and the casing, at both ends of the casing, shall be plugged with brick and mortar in accordance with accepted construction practices. Unless otherwise indicated on the plans or in the Special Provisions, the space between the sewer pipe and encasement pipe shall be filled with sand or grout, as shown on the Plans or as directed by the District.

B. Pipe Bursting - Trenchless sewer installation by pipe bursting involves the shattering of an existing sewer and pushing the broken pieces into the surrounding soil and then inserting a polyethylene pipe liner.

1. Methods Pipe bursting methods may include a hydraulic expanding head or a conical head pulled through the sewer to be burst with sufficient force to break the existing sewer and insert the new liner pipe. Use of a pneumatic percussive head is not allowed unless specifically permitted by the District.

The Contractor shall be certified by the Pipe Bursting System Manufacturer that such firm is a licensed installer of their system. Polyethylene pipe jointing shall be performed by personnel trained in the use of joint fusion and stab joint equipment and recommended methods for pipe liner connections.

2. Preparation Prior to commencing the pipe bursting procedure, the Contractor shall televise the existing sewer to determine the location of each house laterals and to determine if there are any obstructions or special problems in the sewer to be pipe burst.

   Each lateral shall be exposed and the Contractor shall verify that each one is live prior to pipe bursting. The Contractor shall also determine whether or not extra laterals which are found during the televising are live or dead, since some houses may have more than one lateral.

3. Access Excavations - The Contractor shall construct access excavations as necessary for the pipe bursting and liner insertion. When practicable, access excavations shall be located where interference to vehicular traffic and inconvenience to the public is minimized. Excavations for pulling or pushing equipment shall have adequate support provided to prevent damage to adjacent areas.

   Existing manholes shall be excavated for access excavations wherever practical. Manhole inverts and bottoms shall be removed to permit access for installation equipment.

4. Bypassing Sewage During pipe bursting of a live sewer, the Contractor shall bypass the sewage around the section or sections of sewer line to be rehabilitated. The bypass shall be made by plugging existing upstream manhole and pumping the sewage into a downstream manhole or adjacent system or other method as may be approved by the District. The pump and bypass lines shall be of adequate capacity and size to handle the flow without backing up the sewage to a point that threatens connected homes.

   The Contractor shall be responsible for continuity of sanitary sewer service to each facility connected to the section of sewer during the execution of the work. If it is necessary to continue the bypass during non-working hours, the Contractor shall provide a high water alarm.

   Support equipment used to perform the work shall be located away from buildings so as not to create a noise impact. Provide silencers or other devices to reduce machine noise as required to meet applicable noise ordinances.

5. Pipe Installation Thread the necessary lines through sewer section to be rehabilitated and then pull the bursting head followed by the liner pipe.

   After the pipe has been installed in the entire length of the sewer section, the liner pipe shall be anchored at manholes. The pipe shall protrude in the manholes for enough distance to allow sealing and trimming. Sealing the pipe at manholes

providing a flexible gasket connector shall be installed in the manhole wall at the end of the pipe, centered in the existing manhole wall. Grout the flexible connector in the manhole wall filling all voids the full thickness of the manhole wall. Restore manhole bottom and invert.

6. Sewer House Connections Sewer house connections shall be connected to the liner pipe by heat fusion saddles. Once the saddle is secured in place, drill hole full inside diameter of saddle outlet in pipe.

   The existing house sewer shall be connected to the saddle using a flexible coupling. After connection to the saddle, the side sewer connection pipe shall have a slope toward the newly lined sewer equal to the slope of the existing lateral pipe or a minimum of two percent.

C. Directional Drilling Procedure

1. General Horizontal directional drilling shall consist of the drilling of a small diameter pilot bore from the entrance pit to the exit pit. Once the pilot boring is in place and conforms to the horizontal and vertical design requirements shown on the plans and specified below, the Contractor shall ream out the hole to the smallest practicable diameter and then use "pipebursting" head to pull the pipeline into place.

2. Guidance Of Pilot Bore The Contractor shall prepare and submit a bore plan which includes drilling machine, bore hole location technique to be used, final bore hole diameter and final bore hole grouting methods if required, to the District for review prior to commencing work. Pipelines installed by directional drilling must be located horizontally and vertically to the design grade in the location as shown on the plans and no shallower than the vertical design location as shown on the profile or as specified herein. The head of the pilot bore shall be equipped with a sewer grade transmitter which will allow the Contractor to determine its location, pitch in 0.1 percent increments from 0.1 to 45 percent, roll, battery status and depth from the ground surface. Based on this information, the Contractor shall determine the pilot location and plot on the plans the actual horizontal, vertical alignment and sewer grade of the pilot boring at intervals not exceeding every ten (10) feet during the drilling of the pilot boring. The current plot shall be available for inspection upon request by the inspector. The alignment and depth of the pilot boring must be approved by the District before the pipeline is pulled.

3. Drilling Operation Upon request by the inspector the Contractor must demonstrate the accuracy of the transmitter installed within the bore tool housing prior to pilot boring operations commencing. Use of bent drill rods is not acceptable and shall be replaced with a straight rod at the request of the inspector.

During the drilling operation, the Contractor shall make adequate provision to contain and dispose of muddy water or drilling mud. Muddy water or drilling mud must not be discharged to any storm drains, creeks, or watercourses. Where no provisions can be made for storage of muddy water or drilling mud on-site, it must be hauled away to a suitable legal disposal site on a daily basis.

4. Bore Hole Any over bore between the pipe and the actual bored hole shall be sealed for its entire length with cement slurry grout, taking care not to collapse, overheat, or otherwise damage the pipe.

14-11 Cleaning and Testing - Gravity Mains and Trunk Sewers. After installation, all gravity and trunk sewers shall be tested and cleaned as herein specified, in the presence of the District inspector. The Contractor shall notify the District Inspector twenty-four (24) hours prior to any testing during normal working hours. The program for testing and cleaning shall fit the conditions as mutually determined by the District and the Contractor. The Contract shall furnish all labor, tools, equipment and water necessary to make all tests, clean the lines and to perform any work incidental thereto. The Contractor shall take all necessary precautions to prevent any joints from pulling while the pipelines or their appurtenances are being tested. He shall, at his own expense, correct any excess leakage and repair any damage to the pipe and its appurtenances or to any structures, resulting from or caused by these tests. Materials and methods used for any necessary repair work shall be specifically approved by the District.

The Contractor shall flush all sewer lines prior to testing and accumulated materials shall be removed at each manhole and no materials shall be allowed to enter the existing sewer system. A plug shall be installed and maintained by the Contractor in the line connecting to the existing system until all cleaning and testing is completed and the lines are approved for operation. All side sewers shall be plugged at their ends until hooked up to the building sewer.

A. Testing - Each section of sewer line shall be tested as provided herein using either water or air at the option of the Contractor. However, in the event that the Contractor elects to test sewer sections using the air test method, each manhole shall be tested separately using the procedure outlined in Section 16-08.

The infiltration test described below may be required by the District in addition to either the water or air tests.

All testing specified herein below shall be done after the placing and compaction of intermediate trench backfill and placement of the road subbase, but prior to final paving. If a new street is being constructed involving the placement of cement treated or lime treated base, the testing and repair of all sewers shall be completed prior to installation of such base.

1. Water Test - Each section of sewer shall be tested between successive manholes by plugging the lower end of the sewer to be tested and the inlet sewer of the upper

manhole and filling the pipe and manhole with water to a point four (4) feet above the crown of the sewer in the upper manhole, or, if ground water is present, four (4) feet above the average adjacent ground water level. For the convenience of the Contractor, where grades are slight, two (2) or more sections between manholes may be tested at once. However, when testing more than one section, the allowable leakage for the total length shall be that computed for the shortest section of pipeline between manholes tested. Where grades are steep and excessive test heads would result by testing from one manhole to another, test fittings the full size of the main shall be installed at intermediate points so the maximum head on any section under test will not exceed twelve (12) feet. The lines shall be filled at least two (2) hours prior to testing and shall be tested at least one (1) hour maintaining the head specified above by measured additions of water. The sum of these additions shall be the leakage for the test period.

The allowable leakage shall be figured as fifty (50) gallons per day per inch of sewer diameter per mile of main sewer being tested. After that time the leakage shall be measured and, if any leakage exists, the Contractor shall discover the cause and remedy it before the sewer is accepted. Where the actual leakage is less than the allowable and leaks are observed, such leaks shall be repaired at the Contractor's expense, as directed by the District.

2. Air Test - Low pressure air tests for sewers between structures shall be accomplished by carefully placing test plugs at each end of the section of line to be tested. Air test shall be allowed on lines only up to 10" in diameter. When all necessary test equipment is in place, a compressed air supply shall be attached to the air fitting on the equipment and the air pressure within the line increased to the test pressure. After the air supply is securely turned off or disconnected, there shall be a two (2) minute waiting period to allow stabilization of air within the sewer line before the actual test period begins. The test pressure shall be at least five (5) pounds per square inch at the beginning of the test.

   The air pressure must not drop over a ten (10) minute period.

   The maximum length of a sewer line that may be tested at one time shall be five hundred (500) feet, exclusive of any laterals. After completion of a test, the air pressure shall be released slowly through the valve, which is incorporated in the test equipment. Air test plugs shall not be removed until the air pressure is no longer measurable.

   If groundwater is known to be present, the beginning test pressure shall be increased as directed by the District.
   When the Contractor elects to test sewer sections using the air test method, each manhole shall be water tested by plugging all inlet and outlet pipes and filling the manhole with water, per Section 16-08.

3. Infiltration Test - If in the construction of a sewer, excessive ground water is encountered, the tests for leakage described above may, at the discretion of the District, be supplemented by the infiltration test described herein. Test sections shall be isolated and any pumping of groundwater shall be discontinued for at least three (3) days and the groundwater shall be allowed to rise to maximum level. The infiltration rate shall then be measured at the low end of the test section.

   The infiltration rate shall not exceed fifty (50) gallons per day per inch of sewer diameter per mile of main sewer being tested. No additional allowance shall be made for manholes or other structures. If the observed infiltration rate exceeds the allowed limit, the required repairs shall be made and the section shall be retested. Repairs and retesting shall be repeated until the observed infiltration falls within the allowed limit. Notwithstanding satisfactory passing of other than leakage tests or infiltration tests, where infiltration is later discovered in excess of the allowed limit before completion and acceptance of the sewer, the sewer shall be immediately uncovered where necessary and repairs made to reduce the infiltration rate within the allowed limit before the sewer is accepted. However, should the infiltration be less than the specified amount, the Contractor shall stop any individual leaks that may be observed when ordered to do so by the District.

B. Cleaning - After gravity main and trunk sewers have been tested for leakage and after either temporary or permanent surfacing replacement has been installed, but prior to acceptance, they shall be tested for obstructions and cleaned by hydro-flushing with high pressure water using hydrovac equipment or balling with a Wayne ball. The District reserves the right to ask the Contractor to clean downstream sewer lines if, in the opinion of the District, there is reason to believe dirt and debris may have entered the District's system.

C. Deflection Test - After the sewer main has been tested hydrostatically or with air and cleaned, but before sewage is allowed to enter it, the Contractor shall conduct a test for excessive deflection of all PVC sewer mains except PVC C-900 pipe. The deflection test shall consist of pulling a mandrel of a predetermined diameter through the pipeline. The mandrel shall be based on a five (5) percent allowable deflection and six (6) percent go-no-go. Mandrels shall have the following outside diameter.

Sewer Diameter Inches	Mandrel Outside Diameter Inches
6	5.54
8	7.42
10	9.27
12	11.03
15	13.51

If the sewer pipe does not meet the mandrel test, it shall be removed and relaid.

D. Television Inspection - After the sewers have been backfilled, completed, tested and cleaned, but before acceptance of the job, the Contractor shall arrange and pay for closed circuit television inspection of the sewer mains and each lateral. All televising shall be performed by a firm experienced in closed circuit televising of sewer lines acceptable to the District. Televising shall be in color and done in the presence of the District Inspector, and the Contractor shall furnish to the District a videotape and DVD (sewer main only) of the complete television inspection. The television camera shall be equipped with a measuring device so that the depth of any sags can be accurately determined. The television camera shall be equipped with an articulating camera head which would allow the camera to inspect the lateral stub connection and pipe joints. Defects, including but not limited to sags, leaks, breaks, excessive pipe deflection, etc., which are in excess of the limits specified above, revealed by the television inspection shall be promptly corrected by the Contractor at no expense to the District. Television inspection will be paid for on a lineal foot basis in accordance with the bid item therefor.

The grade of all gravity sewers shall be within • 0.05 feet of the elevations and grades shown on the plans with the provision that, in no event, shall a gravity sewer, drain, or air vent line be allowed to have a sag or standing water greater than 0.10 feet deep.

Defects, including but not limited to sags that are in excess of the limits specified above, leaks, breaks, excessive pipe deflection, etc., as revealed by the television inspection shall be promptly corrected by the Contractor at no expense to the District.

After correction of the defect or defects found by the television inspection, the pipeline where the corrections were made shall be retelevised at the Contractor's expense. The retelevising shall be performed by a firm experienced in closed circuit televising of sewer lines acceptable to the District.

E. Warranty Inspection - All sewer mains shall be retelevised eleven (11) months after acceptance by the District as a warranty inspection. Any and all defects revealed by this retelevising shall be corrected.

14-12 Side Sewer Testing -All side sewers shall be tested and cleaned in the same manner as that specified for main sewers, in the presence of the District Inspector. An approved test fitting and plug shall be installed at or near the point of connection to the main sewer, or lateral sewer if existing, and at the connection with the building plumbing. The pipe shall be tested after it has been bedded and shaded. Any leaks discovered shall be repaired by the Contractor at his expense.

Test fittings shall be wye branches or tees of the same type, size and quality as that of the side sewer, unless otherwise approved, and shall be installed where required. The branch of each test fitting shall be laid in an upright position. After the test is completed and the test plug has been removed, the test wye shall be capped or completed per Standard Drawing SD 6.

14-13 Testing of Force Mains - All force main pipes shall be thoroughly cleaned by flushing prior to testing in such a manner that no materials are allowed to enter the existing sewer system.

After installing the force main pipe and after placing and compacting the intermediate trench backfill and placement of road subbase, but before final paving has been placed and compacted as specified herein, all force mains shall be tested for leakage as provided below. The program for testing shall fit the conditions as mutually determined by the District and the Contractor. The Contractor shall furnish all labor, tools, equipment and water necessary to make the tests and to perform any work incidental thereto. Any leaks which may develop shall be repaired by and at the expense of the Contractor, and he shall, at his own expense, correct and repair any damage to the pipe and its appurtenances, or to any other structures, resulting from or caused by the tests.

A hydrostatic test shall be applied for not less than two (2) hours, or for as long as may be necessary to check all joints and find any leaks which might develop. The test pressure should be 120% of the total dynamic head of the system or fifty (50) pounds per square inch, whichever is greater. Force main pipe installations will not be accepted unless there is zero leakage. Use of air to test force mains is not permitted.

SECTION 15 DEMOLITION AND ABANDONMENT OF LINES AND STRUCTURES

15-01 Description. The Contractor shall remove equipment and concrete work as necessary for the construction of work and abandon certain pipelines and structures as shown on the plans and as specified.

15-02 Safety. The Contractor shall take all necessary precautions with regard to safety in carrying out the demolition work. Suitable barriers shall be erected around the demolition area to protect workmen and the public, and the Contractor shall rigorously comply with applicable safety requirements.

15-03 Salvage of Equipment and Materials. All electrical and mechanical equipment and piping designated to be salvaged shall be carefully salvaged and delivered to the District in good condition. When designated on the Plans or in the Special Provisions, the Contractor shall give the District two (2) working days to remove sensitive electrical equipment. Salvaged materials shall not be reused in new work unless specifically permitted by the District.

15-04 Methods and Equipment. Before starting work, the Contractor shall inform the District fully as to the method of demolition he proposes to follow, and the amount and character of equipment he proposes to use, which shall be subject to the approval of the District. The approval of the District shall not be considered as relieving the Contractor of the responsibility for the safety of his method or equipment or from carrying out the work in full accordance with the plans and specifications.

15-05 Removal of Old Structures. The Contractor shall carefully dismantle old structures which, unless otherwise provided in the Special Provisions.

15-06 Abandonment of Pipelines. Pipelines to be abandoned shall be filled with grout and securely closed at all pipe openings by a watertight plug of concrete, or brick and cement mortar, not less than three (3) feet thick.

The grout materials for filling pipelines shall consist of Portland cement, or Portland cement and fly ash with additives to enhance maximum flowability without bleeding or segregating.

1. The grout shall have a minimum compressive strength of 25 psi in 24 hours when tested in accordance with ASTM C-403 and a minimum compressive strength of 100 psi in 28 days and maximum compressive strength of 150 psi in 28 days when tested in accordance with ASTM C-495 or C109.

2. The Contractor shall establish the proposed grout mixes, methods, plans and criteria that the grouting operations shall meet. The grouting system shall have sufficient gauges, monitoring devices and test to determine the effectiveness of the grouting operation and to ensure complete fill (100%) and that no voids exist within the pipeline or structure.

3. One or more mixes shall be developed to completely fill the abandoned pipe/structure and to meet the following requirements:

   a. Accommodate the diameter or size of pipe/structure
   b. Accommodate the void size of the surrounding soil
   c. Accommodate the absence or presence of ground water
   d. Provide the acceptable strength and durability
   e. Provide load bearing capacity
   f. Shrinkage shall not exceed 2% by volume

4. The Contractor shall design a grout mix with a maximum density of 65 PCF, while at the same time maintaining apparent viscosity not to exceed 18 seconds as tested in accordance with ASTM C939. The ultimate load bearing capacity shall be 36 tons/SF minimum.

15-07 Sewer Structures to be Abandoned. Sewer structures to be abandoned shall have all openings, sewer lines, inlets and outlets sealed off, and the structure shall be removed to a point three (3) feet below the proposed street grade or ground surface and filled with intermediate backfill material compacted to 90% relative compaction.

The surface shall be restored as shown on the typical trench section shown on the plans. Where manholes to be abandoned are in landscaped areas, an approved top soil mix shall be placed in the top 12" and the landscaping shall be restored.

The manhole frame and cover from existing manholes to be removed or abandoned shall not be re-used on new manholes and shall become the property of the Contractor.

_holes Manholes designated to be removed shall be excavated, all castings, covers, barrel sections and the base shall be completely removed and disposed of at a legal disposal site. The excavation shall be backfilled with intermediate backfill material and compacted as necessary for the final surfacing.

15-09 Disposal of Materials and Debris. All materials and debris resulting from the demolition work and after salvage by the District shall become the sole property of the Contractor and shall be disposed of by the Contractor at a legal disposal site.

SECTION 16 MANHOLES

16-01 Description. Manholes shall be installed at location shown on the plans and in accordance with the following provisions, the Special Provisions and the Standard Drawings.

16-02 Precast Manholes. All precast manhole sections shall conform to ASTM C-478, except that Type II modified Portland cement shall be used. The design, the specifications and the name of the manufacturer of any precast manhole units shall be submitted to the District for approval prior to purchase. All precast manhole sections shall be vacuum tested at the factory prior to shipment and shall bear a stamp that the precast manhole section has passed the vacuum testing requirements specified in Section 16-07.

16-03 Manhole Channels. Where sewer lines pass through manholes, construction shall conform to the applicable Standard Drawings. Pipe shall be used as a form for the channel if the proper positions of the flexible joints can be maintained. Whether pipe or channel forms are used, after the manhole base concrete has taken a set, the channel shall be checked with the proper template. All channels shall be finished smooth with a steel trowel.

16-04 Precast Manhole Construction. An approved form ring conforming to the dimensions of the precast barrel section joint shall be used to form a joint groove in the manhole base prior to setting the first barrel section. The concrete base shall be sufficiently cured to the satisfaction of the District before the first barrel section is set. All joint surfaces of precast sections and the manhole base shall be thoroughly clean prior to setting precast sections. These various sections shall be set in a Ram-Nek sealing gasket, or equal, and installed in accordance with the manufacturer's recommendations.

Handling of barrel sections after the sealing gasket has been affixed shall be carefully controlled to avoid bumping the gasket and thus displacing it or covering it with dirt or other foreign materials. Any gaskets so disturbed shall be removed and replaced if damaged and repositioned if displaced. Care shall be taken to properly align the manhole section with the previously set section before it is lowered into position.

Use of precast manhole bases is not permitted.

16-05 Adjusting or Repairing Manholes. All workmanship and materials shall conform to these Standard Specifications and to the Standard Drawings of the District. In the case of existing brick or cast-in-place concrete manholes, repair or adjustment in kind or with precast elements may be permitted upon approval of the District. Standard undamaged frames and covers shall be reinstalled unless otherwise directed by the District. Where the completed manhole throat will exceed twelve (12) inches, adjustment shall be made by removing the upper portion of the manhole down to the first barrel section. Precast concrete barrel and cone sections shall be used to reconstruct the upper portion of the manhole in accordance with the

Standard Drawings. The frame and cover shall be set to conform to the requirements of the individual location.

Before any work is started on adjusting or repairing a manhole, the channel inside the manhole base shall be covered with a temporary debris cover, consisting of plywood and canvas. This temporary debris cover shall be kept in place during all work, and upon completion, the canvas and the plywood shall be carefully removed from the manhole interior allowing no debris to fall or to remain in the manhole.

16-06 Temporary Covers and Plugs for Structures. The District must have accessibility to manholes to allow maintenance of the system at all times. In streets, avenues, intersections, lanes, any public thoroughfares involving automobile traffic, buses, trucks, etc., the permanent manhole casting and cover shall be installed on all actively used sewers and sewer mains, including manholes, where live laterals and/or the main sewer is being used. The permanent manhole, casting and cover shall be brought to the grade of the temporary asphalt. The manhole, frame and cover shall at a later date be set to grade to match the permanent grade when the final paving is being done.

Temporary steel plate covers of approved design shall only be used on inactive sewer lines during the construction in subdivisions or other areas not subject to active vehicular traffic where final grades for unfinished roadbeds have not been determined, or where approved or ordered by the District. If the sewer being constructed is actively used, the Contractor shall install the permanent manhole frame and cover so the District can have access to the sewer for maintenance.

A temporary debris cover, as described in Section 16-05, shall be placed over the base of any existing manhole prior to beginning any adjustment or repair work.

16-07 Manhole Testing. All manholes shall be watertight. All manholes shall be successfully tested either with clean water or by vacuum testing.

A. Water Testing Of Manholes. When a manhole is to be water tested the inlet and outlet sewers shall be plugged and the water shall be brought up above the cone section so that the water level is at least three (3) feet above the level of groundwater outside the manhole. Manholes shall be watertight with zero (0) leakage of water as tested over a fifteen (15) minute period. The Contractor shall repair any and all leaks into the manhole noted during conditions of high groundwater.

B. Vacuum Testing Of Manholes

1. Sanitary sewer manholes may be vacuum tested in lieu of water testing. Vacuum testing of manholes shall be performed twice, first prior to backfilling and then again after backfilling.

2. Vacuum testing of manholes shall conform to the standard set for in ASTM C1244-93 Standard Test Method for Concrete Sewer Manholes by the Negative Air Pressure (Vacuum) Test.

3. The District representative shall be notified a minimum of two working days prior to the testing of the manholes.

4. The Contractor shall be responsible to perform the tests. The District's representative shall be present during all tests.

5. The Contractor shall document the tests and submit this documentation to the District.

6. Manholes shall be prepared for vacuum testing as follows:

   a. All lift holes shall be plugged.

   b. All pipes entering the manhole shall be temporarily plugged, taking care to securely brace the pipes and plugs to prevent them from being drawn into the manhole.

7. Vacuum testing of manholes shall be conducted as follows:

   a. The test head shall be placed at the top of the manhole in accordance with the manufacturer's recommendations.

   b. A vacuum of 10 inches of mercury shall be drawn on the manhole, the valve on the vacuum line of the test head closed, and the vacuum pump shut off. The time shall be measured for the vacuum to drop to 9 inches of mercury.

   c. The manhole shall pass if the time for the vacuum readings to drop from 10 inches of mercury to 9 inches of mercury meets or exceeds the values indicted in Table 1.

   d. If the manhole fails the initial test the leaks shall be located and the necessary repairs made by an approved method. The manhole shall then be retested until a satisfactory test is obtained.

8. If the vacuum test fails, or 10" Hg vacuum cannot be obtained the following procedure shall be followed to locate the leaks.

   - Shut off vacuum pump
   - Remove vacuum test plate from manhole
   - Then, using a 2 gallon hand pump sprayer (like a garden sprayer), spray the interior surface of the manhole with a soap and water mixture

- Begin testing
- After 30 second, stop vacuum and remove vacuum test plate once again
- Check the inside of manhole for soapy bubbles, indicating the areas that leak

TABLE 1 - VACUUM TEST TIMETABLE

MANHOLE DEPTH-FEET	MANHOLE DIAMETER-INCHES 48"	60"	72"
4'	10 sec.	13 sec.	16 sec.
8'	20 sec.	26 sec.	32 sec.
12'	30 sec.	39 sec.	48 sec.
16'	40 sec.	52 sec.	64 sec.
20'	50 sec.	65 sec.	80 sec.
24'	60 sec.	78 sec.	96 sec.
*	5.0 sec.	6.5 sec.	8.0 sec.

*Add "T" times for each additional 2' depth.

(The values listed above have been extrapolated from ASTM designation C924-85.)

SECTION 17 STRUCTURAL CONCRETE

17-01 Description. Structural concrete shall include the furnishing all labor, tools, equipment and material necessary for the installation of all concrete, reinforced concrete, reinforcing steel, grout, and mortar, as detailed on the plans or in the Special Provisions.

Concrete work shall also include the treatment of concrete surfaces; the provision of construction joints; the placing and setting of all anchor bolts, pipe railings, manhole steps and floor opening frames and covers, and all appurtenances to the mechanical, and electrical equipment that must be attached to or set into the concrete; the setting of all anchor bolts for structural steel, and all miscellaneous items attaching to the concrete as detailed on the plans or in the Special Provisions under the equipment section of the work.

17-02 Standards. All concrete materials and construction shall comply with the requirements, and be in accordance with the American Concrete Institute Standard 301, "Specifications for Structural Concrete for Buildings," except as supplemented and modified as follows (all references to "Architect/Engineer" in the ACI Standard shall be interpreted as referring to the District). Design and construction shall conform to the latest "Uniform Building Code." Arrangement and details of reinforcing steel, including bar supports and spacers, shall be in accordance with the latest ACI 315 detailing manual.

17-03 Strength. All concrete shall be Working Stress type concrete for use in structures or structural elements which have been analyzed and proportioned by working stress (straight line) theory.

The concrete for all structures shall have a minimum compressive strength of three thousand five hundred (3,500) pounds per square inch twenty-eight (28) days after placement.

All structural concrete shall be Class A containing a minimum of five hundred sixty-four pounds (six sacks) of Portland cement per cubic yard.

17-04 Submittals. The Contractor shall submit to the District for favorable review the following, even though items proposed to be furnished conform to the exact description stated in the specifications or as shown on the plans:

1. A notarized statement stating that the cement conforms to ASTM C-150.
2. Concrete mix design and strength data.
3. Shop Drawings of reinforcing detail and layout.

17-05 Cement. All cement for all structures shall be Type II, ASTM C-150.

17-06 Admixtures. Admixtures may be used subject to District approval.

17-07 Aggregates. All aggregates shall conform to "Specifications for Concrete Aggregates" (ASTM C-33). All aggregates shall have a minimum C.V. (cleanliness value) and S.E. (sand equivalent) of not less than 75. Three (3) samples shall be tested in each case and shall be taken from the weight hopper. The average of the results of the individual tests will be the accepted value in each case. These values shall be maintained throughout the course of the work, and any indicated deviation therefrom will be cause for rejection of such material, pending additional tests. Tests shall conform to Test Method No. Calif. 227 for cleanliness value and Test Method No. Calif. 217 for sand equivalent (Materials Manual, Testing and Control Procedures - Materials and Research Department, State of California).

The nominal maximum size of aggregates shall be 1½"; gradation shall be based on a 1½" nominal maximum size aggregate. In thin section (6" or less in thickness), a ¾" nominal maximum size aggregate may be used if expressly approved in writing by the District.

17-08 Selection of Proportions. The Contractor shall have his mix designed and shall submit the proposed proportions to the District for review and approval. The cement content shall be not less than six (6) sacks of cement (94 lbs. per sack) per cubic yard of concrete, and the water-cement ratio shall not be greater than 5.75 gallons of water per sack of cement. Only clean, fresh water shall be used for making concrete.

17-09 Reinforcing Steel. Unless otherwise specified, reinforcing steel shall be Deformed and Plain Billet-Steel Bars for Concrete Reinforcement conforming to ASTM A-615 Grade 60. Bars smaller than #4 bars shall be ASTM A-615 Grade 40. Reinforcing bars shall be placed in accordance with the size and spacing shown on the plans.

Mesh reinforcement shall conform to the requirements of ASTM A-185. The gauge of the wire and the dimensions of the mesh shall be as detailed on the plans or in the Special Provisions.

17-10 Formwork. Lumber and plywood shall conform to the dimensions of the concrete surfaces shown on the plans, shall be sufficiently tight to prevent leakage, and shall be sufficiently strong and braced to maintain their proper shape and alignment.

All sharp edges and corners shall be chamfered with one (1) inch triangular fillets, unless otherwise directed by the District. The triangular fillets or chamfer strips shall be milled or surfaced on all sides. Curved surfaces shall be formed of strips of matched lumber not over four (4) inches wide or of other material, such as plywood or metal, which has been approved by the District.

Unless specifically approved by the District, earth cuts shall not be used as forms for vertical surfaces other than foundations below grade. Where permitted, the cut shall be neat, straight and must stand vertical.

17-11 Reinforcing. Reinforcing bars shall be tied and supported so as to maintain their exact shape and alignment during concrete placement. Lap bars 50 diameters at splices unless noted otherwise.

17-12 Depth of Footings. The elevations of the bottoms of footings, as shown on the plans, shall be considered as approximate only, and the District may order, in writing, such changes in dimensions or elevations of footings as may be necessary to secure a satisfactory foundation. Coarse bedding material shall be placed as a, subgrade below the footing to a minimum depth of twelve (12) inches, under the entire footing of all concrete structures, except standard manholes.

17-13 Control of Water. Water shall be controlled as required in Section 13-05D. Pumping of water from the interior of any foundation enclosure shall be done in such a manner as to preclude the possibility of any portion of the concrete materials being carried away. No pumping will be permitted during the placing of concrete, or for a period of at least twenty-four (24) hours thereafter, unless it be done from a suitable sump separated from the concrete work.

The Contractor shall take all necessary precautions to preclude the discharge of silt or cement fines from newly poured concrete into natural waterways or into sewers.

17-14 Concrete Placement. The Contractor shall notify the District at least seventy-two (72) hours before concrete is placed. No concrete shall be placed until all excavations, forms, reinforcing, and inserts have been constructed and inspected by the District.

All concrete shall be thoroughly vibrated during the pouring operation by a mechanical vibrator. The Contractor shall have a spare vibrator on the job prior to any pour.

17-15 Finishes on Concrete Surfaces. The following specifications set forth the requirements for the classes of surface finish, which shall be applied to the various parts of concrete structures.

A. Wearing Surface - Unless otherwise specified on the Plans, in the Special Provisions, or directed by the District, the wearing surfaces of concrete steps and concrete walkways, together with the top surfaces of all floors of structures and slabs shall be given a monolithic finish. All surfaces to be finished shall be thoroughly worked and brought to a uniform steel trowel finish. In addition, where directed by the District, stair treads, landings, walkways or floors shall be given a brush or broom finish.

B. Ordinary Surface Finish - Ordinary Surface Finish shall be applied to all concrete surfaces either as a final finish or preparatory to a higher class finish. On surfaces which are to be buried underground and are in contact with the ground or specified backfill, the removal of fins and form marks and the rubbing of mortared surfaces to a

uniform surface will not be required. Unless otherwise specified, Ordinary Surface Finish shall be considered as a final finish.

During the pouring of concrete, care shall be taken that the methods of compaction used will result in a surface of even texture, free from voids, water or air pockets, and that the coarse aggregate is forced away from the forms in order to leave a mortar surface.

Immediately after the forms have been removed, all form bolts shall be removed to a depth of at least one (1) inch below the surface of the concrete. All holes and depressions caused by the removal or setting back of such form bolts shall be cleaned and filled with a Class II mortar of matching color. Care shall be exercised to obtain a perfect bond with the concrete. All fins caused by form joints and other projections shall be removed and all pockets cleaned and filled. Cement mortar for filling pockets shall be treated as specified for bolt holes. In the judgment of the District, if rock pockets are of such an extent or character as to affect the strength of the structure materially or to endanger the life of the steel reinforcement, he may declare the concrete defective and require the removal and replacement of that portion of the structure affected.

Holes or depressions in surfaces which are to receive Class 1 Surface Finish shall be cleaned and filled with mortar at least seven (7) days prior to starting Class 1 Surface Finish. Exposed mortar shall be wetted with water at intervals during the day for two (2) consecutive days after placing. After the mortar has thoroughly hardened, the surface shall be rubbed with carborundum as required to match the texture and color of the adjacent concrete.

C. Class 1 Surface Finish - The application of Class 1 Surface Finish shall result in obtaining smooth, even surfaces of uniform texture and appearance, free of unsightly bulges, depressions and other imperfections. The degree of care in building forms and character of materials used in form work will be a contributing factor in the amount of additional finishing required to produce smooth even surfaces of uniform texture and appearance, free of unsightly bulges, depressions and other imperfections, and the District shall be the sole judge in this respect.

Unless otherwise indicated on the plans or in the Special Provisions, all exposed interior and exterior concrete surfaces of all treatment plant and pumping station structures shall be given a Class 1 Surface Finish as a final finish.

After completion of the Ordinary Surface Finish, areas which do not exhibit the required smooth, even surface of uniform texture and appearance shall be sanded with power sanders or other approved abrasive means until smooth, even surfaces of uniform texture and appearance can be obtained.

17-16 Curing. All concrete shall be properly cured in accordance with the requirements of the American Concrete Institute Standard 301.

Forms shall not be stripped until seven (7) days have elapsed after the concrete was poured.

17-17 Concrete Deposited Under Water. In excavations for the footings of proposed structures, if conditions render it impossible or inadvisable in the opinion of the District to dewater the excavation before placing concrete, the Contractor shall deposit under water, by means of a tremie or bottom dump bucket, a layer of concrete of sufficient thickness to thoroughly seal the cofferdam. Concrete deposited in water shall be Class A with ten (10) percent extra cement added. The exact thickness will depend upon the hydrostatic head, but in no case shall the seal be less than eighteen (18) inches. This seal shall, in general, be allowed to remain in place for not less than five (5) days and preferably ten (10) days before dewatering so as to set sufficiently to withstand the hydrostatic pressure.

All portions of the structure for which concrete must be deposited under water shall be poured continuously until completed. When such portions are completed, all scum, laitance, and sediment shall be removed before fresh concrete is deposited. Concrete shall not be placed in running water.

17-18 Waterproofing. When called for on the plans or in the Special Provisions, waterproofing of the type specified shall be installed in accordance with the requirements of Section 54 of the State Standard Specifications or as specified in the Special Provisions.

17-19 Drypack and Special High-Strength Non-Shrink Mortar. Where "drypack" is called for on the plans, a mixture containing one (1) part cement to three (3) parts clean sand shall be used. The moisture content shall be such that the mixture will ball when formed by hand, but will crumble when struck. The mixture shall be confined in the opening to be filled and driven home in small amounts, using a hammer and a stick or blunt metal tool in such a manner that a very dense mortar is obtained. should the resulting joint leak, the material shall be chipped out and the opening refilled until a watertight joint is obtained.

As shown in the plans, the Contractor shall provide concrete bases under all equipment. Cement grout shall be poured under all fabricated metal bases in such a way that all voids are filled with non-shrink mortar, giving support to all parts of the fabricated base. Mortar shall be placed by pouring with enough pressure (head) so that mortar will reach all portions of the fabricated base. A hole shall be drilled in fabricated base at each cell to let out air and a small amount of mortar to assure completely filling each cell.

Mortar used shall be non-shrinking, non-metallic, level-fill grout, water and oil resistant, developing a compressive strength of at least 7,500 psi in seven (7) days, non-metallic and bond to metal. Mortar shall be used in accordance with the recommendations of the manufacturer.

17-20 Alterations to Concrete Structures. All alterations, chipping, drilling or cutting of concrete shall be approved by the District. Where the Contractor is required to cut openings through existing concrete or masonry walls, the hole shall be pre-cut with a proper masonry saw on both sides of the wall. After removal of the concrete, all rough surfaces of the wall shall be ground smooth and patched with cement mortar.

Openings for installation of pipes up to twelve (12) inches diameter shall be machine cored. For larger pipes, openings shall be made by drilling small holes around the periphery prior to chipping out the concrete. After the pipe has been installed, the opening shall be grouted and made completely watertight.

17-21 Grout for Pipes and Anchors. Pipes, anchor bolts, manhole steps or other embedments installed in existing concrete shall be grouted using quick-setting, non-metallic, hydraulic cement. The cement shall be "Waterplug," or "Sika Plug W/C," or equal. The installation shall be made in accordance with the recommendation of the manufacturer.

Where leaks occur in concrete walls, the concrete shall be chipped around the leak and sealed with cement grout above specified, in strict accordance with the manufacturer's instructions.

17-22 Concrete Surface Repairs. Repairs to spalled, cracked, pitted, or crazed concrete surfaces shall be made using Camp Latex Concrete Repair and Topping as manufactured by the Camp Company, Inc., Chicago, IL, or "Sikadur Lo-Mod Mortar" as manufactured by Sika Chemical Corp., Burlingame, CA, or equal. As an alternate, the Contractor may repair concrete surface defects with an approved nonshrink trowel grade epoxy filler, Tnemec 63-1500 filler and surfacer, Will-Cor #900 trowellable putty or equal. The repairs shall be made in strict conformance with the manufacturer's recommendations. For smoothing or repairing large areas that require more than 1/4-inch thickness, special instructions on the use of the material shall be obtained from the manufacturer. The finish painting shall be compatible with the patching material.

17-23 Bonding New Concrete to Old. Where it is required to apply new concrete over old surfaces or to bond precast concrete sections or other types of material to concrete, the Contractor shall first apply a brush-on epoxy resin concrete adhesive equivalent to Concresive #1 as manufactured by Adhesive Engineering, 1411 Industrial Road, San Carlos, CA, or "Sikadur Hi-Mod" as manufactured by Sika Chemical Corp., Burlingame, CA. The old surface shall be cleaned by sandblasting or chipping and the adhesive applied in strict accordance with the recommendations of the manufacturer.

17-24 Slump Tests. Slump tests shall be performed by the Contractor in the presence of the Inspector at the beginning of each day's pour and at such additional times as required by the District or its representative. Slump tests shall be made in accordance with current ASTM Designation C-143.

The amount of water used in the mixture shall be the amount required to produce concrete with a slump within the range shown as nominal slump in the following table:

Type of Work	Nominal Slump Inches	Maximum Slump Inches
Reinforced concrete structures		
Heavy sections	0-3	5
Thin sections & columns	0-4	6
Non-reinforced facilities	0-3	4
Concrete pavement & walls	0-2	3
Concrete placed under water	6-8	9

When the slump of the concrete is found to exceed the nominal slump, the mixture shall be adjusted as directed by the District to reduce the slump to a value within the nominal range shown.

Where there are adverse or difficult conditions which affect the placing of concrete, the Contractor may request permission of the District to increase the slump by increasing both the water and cement content. The cost of additional water and cement shall be at the Contractor's expense.

17-25 Cylinder Testing. For projects involving the placement of a total of ten (10) cubic yards or more of concrete, the Contractor shall take a minimum of three (3) cylinders for testing by the District.

Additionally, three (3) test cylinders shall be made for each day's pour where more than twenty (20) cubic yards of concrete is poured, or for each 150 cubic yards of concrete placed.

The Contractor shall furnish the cans for the test cylinders and pour the concrete into the cans. The test cans shall be marked with the date and stored on the job site in conditions similar to the structure which was poured. The District will pay for the testing.

17-26 Inspection. The District shall inspect and approve formwork and reinforcing steel placement prior to concrete pours. The Contractor shall provide at least twenty-four (24) hours notice that inspections are required.

SECTION 18 CASTINGS AND METAL FABRICATIONS

18-01 Description. Castings and metal fabrications shall be constructed in accordance with the details shown on the plans, Standard Drawings and as hereinafter specified. The Contractor shall install or erect the metal work, remove the temporary construction, including the removal of the old structure or structures if specified, in accordance with the plans, these specifications and the Special Provisions.

18-02 Materials. The various materials shall conform to the requirements of the specifications of the ASTM as listed in the following tabulation with certain modifications and additions as specified later in this section.

MATERIAL	ASTM DESIGNATION
Structural steel	A-36
Structural silicon steel	A-94
Structural nickel steel	A-8
Low alloy structural steel for welding	A-242
Structural steel for welding	A-373
High-strength structural rivet steel	A-502
Bolts and nuts	A-307
Black steel pipe (std. wt. seamless)	A-120
Carbon steel for forgings	A-235, Class C1
Alloy steel for forgings	A-237, Class A
Cast steel	A-37, Grade 65-35
Cast iron	A-48, Class 30
Malleable iron castings	A-47, Grade No. 32510
Bronze castings	A-22, Class C
Aluminum Alloy GS11A-T6	A-209
Stainless steel forgings	A-473

Materials used in the manufacture of corrugated metal pipes shall conform to AASHO Designation M-36.

Where the Contractor has been granted permission to substitute rolled stock for forgings, the rolled stock shall meet the physical and chemical requirements for forged steel.

18-03 Structural and Miscellaneous Steel. Steel shapes and plates shall be ASTM A-36. Steel pipes shall be ASTM A-501. Anchor bolts shall be ASTM A-307 with hex heads and nuts. Bolt holes in steel shall be 1/16" oversize, except for holes in column baseplates which may be ¼" oversize.

Fabrication and erection shall conform to the AISC Specification for the Design, Fabrication and Erection of Structural Steel for Buildings, latest edition. All welding shall conform to the standards of the Structural Welding Code of the American Welding Society and Section 1.17 of the AISC Specification, latest edition. All welders shall be certified by the AWS and approved by the Testing Agency.

18-04 Bolts, Nuts and Washers. Bolts and nuts shall conform to the requirements for regular hexagon bolts and nuts of ANSI B18.2.1 and B18.2.2, respectively. Material shall conform to ASTM A-307. Circular washers for common bolts shall conform to ANSI B27.2, Type A. All bolts, nuts and washers shall be galvanized or Type 316 stainless steel as shown on the plans.

18-05 Galvanizing. Hot dip galvanize all sheet steel, plain or shaped, in accordance with ASTM A-525, Commercial Class 1.25.

Hot dip galvanize all products fabricated from rolled, pressed, and forged steel shapes, plates, bars and strip 1/8-inch thick or heavier in accordance with ASTM A-123.

Hot dip galvanize all steel hardware, nuts, bolts, washers, anchors and threaded rods in accordance with ASTM A-153. Nuts shall be sized so that they screw on threaded bolts readily after galvanizing.

Repair damaged galvanizing by heated repair method. Repair materials shall be Galvalloy, or Gal-Viz, or equal.

18-06 Cast Iron Frames and Covers. Castings shall conform to the shape and dimensions shown on the Standard Drawings. All castings shall be clean and free from blow or sand holes or defects of any kind.

The cover and its seat in the frame shall be machined so that the cover will sit evenly and firmly in the frame.

Cast iron frames and covers shall be dipped or painted with asphalt which will form a tough, tenacious, non-scaling coating which does not have a tendency to become brittle when cold or sticky when hot. Covers shall be easily removable.

18-07 Metal Railings. Metal railings shall be of standard one and one-half inch (1-1/2") galvanized iron pipe, aluminum, or stainless steel, as detailed on the plans. They shall be neatly welded and finished and securely anchored in place in their designated locations. Pin connections shall be used wherever possible. A minimum of field welding shall be made. All steel railings shall be ground smooth and galvanized after fabrication.

The Contractor shall provide suitable chains with eyes welded to the end post or rail at one end, and with snap catch and eye at the other end, at entrance to floor openings and wells within and adjacent to the structure. Chains and eyes shall be ground smooth and galvanized after fabrication.

18-08 Aluminum Fabrications. All aluminum handrails, gratings and frames shall be fabricated in a substantial and workmanlike manner. All grating openings shall be banded, and aluminum angle supports shall be installed as necessary for safety. All grating shall be removable. Grating not secured in position by angles shall be provided with standard bolted aluminum clips or fasteners.

After fabrication, all aluminum material shall be given a clear anodized (electro-chemical) finish conforming to NAAM NA-2A designation to a thickness of 0.7 mils minimum anodized coating.

Where shown, aluminum gratings shall be provided with Type 316 stainless steel hinges and locking hasps. All screws or bolts shall be Type 316 stainless steel. A padlock shall be provided for each lock and grating. The padlock shall be master keyed to the District standard.

18-09 Aluminum Isolation Coatings. Aluminum pigmented asphalt paint shall be used for aluminum in contact with other metals.

All aluminum in contact with concrete shall be coated with an approved isolation coating.

18-10 Cutting with Torch. The use of a cutting torch is permissible if the metal being cut is not carrying stress during the operations. The radius of re-entrant flame cut fillets shall be as large as possible, but never less than one (1) inch. To determine the net area of members so cut, one-eighth (1/8) inch shall be deducted from the flame cut edges. Stresses shall not be transmitted through a flame cut surface.`

When cutting with a torch, cuts shall be true to line with a maximum deviation of one-sixteenth (1/16) inch. All burned edges shall be finished by grinding or chipping. The use of the burning torch will be permitted on ends that form compression connections, providing a minimum of one-quarter (¼) inch of metal is left to be removed by machining.

18-11 Painting. All iron and steel surfaces shall be cleaned and painted in accordance with the requirements of Section 19 of these specifications.

18-12 Inspection. All castings and fabrications shall be inspected and approved prior to installation. The acceptance of any material or finished members by the Inspector shall not be a bar to their subsequent rejection, if found defective. Rejected material shall be immediately removed from the site and replaced promptly by the Contractor.

SECTION 19 PAINTING

19-01 Description. Painting shall include the furnishing of all plant, labor, equipment, appliances, and material and the performing of all operations in connection with the preparation of surfaces, application of all paint or other materials and the manufacture of paints, paint material and miscellaneous materials incidental thereto. Surfaces to be painted shall receive treatment and the number of coats prescribed herein, or as detailed on the plans or in the Special Provisions. Paint colors shall be those specified and approved by the District.

19-02 Standards.

A. Painting Standards - All painting shall be done in accordance with Section 59 of the State Standard Specifications, State of California, Department of Transportation, latest edition.

B. Products - All materials, supplies and articles furnished shall, wherever practicable, be the standard product of a recognized, reputable manufacturer. The standard products of manufacturers other than those specified will be accepted when it is proved to the satisfaction of the District that all paint materials comply fully with the specifications.

C. Metal Surfaces - Metal surfaces shall be prepared and painting shall be done in accordance with Steel Structures Painting Council (SSPC) Specifications.

19-03 Safety. Paint materials shall be stored in assigned area, and storage area shall be kept clean and fire safe. Used rags, thinner and buckets shall be disposed of daily.

The Contractor is advised that application of coal tar epoxy and other paint materials may be hazardous. The Contractor shall take all necessary precautions to ensure the safety or workers and property.

The Contractor shall maintain a copy of the Material Safety Data Sheets (MSDS) for all coating materials on the job site at all times.

19-04 Air Quality Standards. All work, materials, procedures and practices under this section shall conform with requirements of the Bay Area Air Quality Management District.

19-05 Epoxy Filler and Surfacer Compound. Epoxy filler and surfacer compound for concrete surfaces shall be non-shrink, trowel grade filler and surfacer with high bond strength and high resistance to abrasion, impact, wet conditions, corrosive fumes, solvents and chemical contact. Filler and surfacer compound shall be Tnemec 63-1500 epoxy putty, Wil-Cor #900 trowellable epoxy putty, or equal 100% solids epoxy patching material.

One (1) coat of Tnemec Series 69, Koppers Hi Guard Epoxy, or equal shall be sprayed on the concrete for the purpose of highlighting the large holes and defects in the concrete surfaces.

The epoxy filler and surfacer compound shall be troweled into the big holes and defects in the concrete surface. The troweled thickness over damaged concrete surfaces shall be 1/32" to 1/16".

19-06 Coating Systems.

Coating System Designation	Paint Specification	
A	Surface Preparation:	Steel - SSPC-SP-10 (near white metal blast cleaning) Concrete - Brush-off blast
	System:	High-Build Coal Tar Epoxy
	Paint Types:	Tnemec Series 46H-413 High-Build Tnemec Tar or Two (2) coats Koppers 300M Coal Tar Epoxy
	Primer:	Self-Priming
	Coats:	Steel - Two coats Total 16-20 mils dry film thickness Concrete - Two coats Base coat 4.0-6.0 mils Top coat 12.0-14.0 mils Total 16-20 mils dry film thickness
B	Surface Preparation:	Steel - SSPC-SP-10 (near white metal blast cleaning) Concrete - Brush-off blast
	System:	High-Build Epoxoline
	Paint Types:	Tnemec Series 69 Koppers Hi-Gard Epoxy
	Primer:	Steel: Self priming Concrete: Thin paint to provide 2 mils dry film thickness, apply epoxy filler and surfacer compound (See 19-05)
	Coats:	Two (2) coats each coat 5.0-7.0 mils dry film thickness Total 10.0-14.0 mils dry film thickness
C	Surface Preparation:	SSPC-SP-6 (commercial blast cleaning)
	System:	High-Build Epoxoline base coat Alkyd Polyurethane Enamel top coat
	Paint Types:	Tnemec Series 69 base coat Tnemec Series 75 top coat Or

	Koppers Hi-Gard Epoxy base coat
	Equivalent Koppers top coat
Primer:	Tnemec 606 base coat
	Compatible Koppers primer
Coats:	Two (2) coats
	Base coat 4.0 mils
	Top coat 4.0 mils
	Total 8.0 mils dry film thickness

19-07 Preparation of Surfaces. All surfaces to be painted shall be thoroughly cleaned before applying paint or surface treatments, including sealing of all surface markings that may bleed through. Clean clothes and clean fluids shall be used in solvent cleaning to avoid leaving a thin film of greasy residue. Cleaning and painting shall be so programmed that dust or spray from the cleaning process will not fall on wet, newly painted surfaces. Hardware, and similar accessories shall be removed or suitable masked during preparation and painting operations, or shall otherwise be satisfactorily protected. In all cases the recommendations of the paint manufacturer shall be rigidly followed in the preparation of surfaces prior to painting.

After the Contractor has completed the job of preparing all surfaces to be painted, the surfaces shall be inspected and approved by the District prior to the application of any paint.

A. Metal Surfaces - All metal surfaces to be painted shall be prepared by sandblasting pursuant to the requirements of Section 19-06 and shall be completely clean and free of all oil, grease, dirt, rust, loose mill scale, old weathered paint, and other foreign substances. The removal of oil and grease shall, in general, be accomplished by sandblasting. Minor amounts of grease and oil contaminants will be tolerated on the surface, prior to sandblasting, provided that the abrasive is not reclaimed and reused. All galvanized metal shall be thoroughly washed with neutralizing solution prior to painting.

B. Concrete Surfaces - All concrete surfaces to be painted shall be prepared by sandblasting pursuant to the requirements of Section 19-06 and shall be completely clean and free of all oil, grease, dirt, etc., and shall be completely wire brushed to remove any loose concrete or paint and all cracks shall be patched to the satisfaction of the District. Surfaces to be painted with coal tar epoxy shall be sandblasted to remove the smooth surface mortar in accordance with the recommendations of the paint manufacturer.

19-08 Paint Applications.

A. Workmanship - All work shall be done in strict accordance with the instructions of the paint manufacturer and in a workmanlike manner so that the finished surfaces will be free from runs, drops, ridges, waves, laps and unnecessary brush marks. All coats shall be applied in such manner as to produce an even film of uniform thickness

completely coating all corners and crevices. All painting shall be done by thoroughly experienced workmen. Care shall be exercised during spraying to hold the nozzle sufficiently close to the surfaces being painted to avoid excessive evaporation of the volatile constituents and loss of materials into the air, or the bridging over of crevices and corners. Spray equipment shall be equipped with mechanical agitators, pressure gauges, and pressure regulators. Nozzles shall be of proper size. Floors, roofs, and other adjacent areas and installations shall be satisfactorily protected by drop cloths or other precautionary measures. All overspray shall be removed by approved method or the affected surface repainted.

The District shall be notified when each coat has been applied and is ready for inspection. Until each coat has been inspected and approved by the District, no succeeding coats shall be applied.

B. Atmospheric Conditions - Except as specified or required for certain water-thinned paints, paints shall be applied only to surfaces that are thoroughly dry and only under such combination of humidity and temperatures of the atmosphere and surfaces to be painted as will cause evaporation rather than condensation. In no case shall any paint at all be applied during rainy, misty weather or to surfaces upon which there is frost or moisture condensation, without suitable protection as approved by the District. Where painting is permitted during damp weather, or when the temperature is at or below 50 degrees F, the surfaces shall be heated to prevent moisture condensation thereon. Bare metal surfaces, except those which may be warped by heat, may be dehydrated by flame-heating devices immediately prior to paint application. While any painting is being done, the temperature of the surfaces to be painted and of atmosphere in contact therewith, shall be maintained at or above 50 degrees F, except where paints are being used which dry solely by evaporation, in which case the temperature of the air and surface may be 35 degrees F or as approved by the District. All paint when applied shall be approximately the same temperature as that of the surface on which it is applied.

C. Protection of Painted Surfaces - Where protection is provided for paint surfaces, such protection shall be preserved in place until the paint film has properly dried, and the removal of the protection is authorized. Items which have been painted shall not be handled, worked on or otherwise disturbed until the paint coat is completely dry and hard. After delivery at the site, all shop coated metalwork shall be repainted or retouched from time to time with specified paint whenever, in the opinion of the District, it becomes necessary to maintain the integrity of the film.

19-09 Painting Schedule. Various items shall be painted in accordance with the painting schedule given below. Coating systems refer to those listed in Section 19-06.

Surface Location	Coating System Designation
All concrete and metalwork submerged or exposed to moisture or sewage, such as wet wells, weirs, gates, pipework (not manholes), etc.	A or B
All exposed interior and exterior concrete surfaces, such as pump station and structure walls, ceilings, etc. (not floors).	B
All concrete and metalwork submerged or exposed to moisture or sewage, such as wet wells, weirs, gates, pipework (not manholes), etc.	C

19-10 Cleanup. Upon completion of his work, the painting contractor shall remove his surplus materials. All paint spills shall be removed and the entire premises shall be free from rubbish, debris, etc., caused by his work. He shall present the work clean and free from blemish so that it is acceptable in every way. All glass and equipment name tags shall be thoroughly cleaned of paint spots and polished, and the job made ready for use.

SECTION 20 SURFACE RESTORATION

20-01 Description. Surface restoration shall include the furnishing of all labor, material, equipment, tools, and services required for the performance of paving and surfacing operations, including repair of curbs, gutters, sidewalks, as well as public and private driveway and sidewalk areas, as specified here and/or as shown on the drawings or as necessary to complete the project. Any concrete curbs, gutters or sidewalks damages by the work shall be repaired or replaced in kind.

No surface restoration shall be performed until all compaction tests have been made and passed and until approved by the District.

20-02 Air Quality Control Board Regulations. The Contractor shall use materials which comply with the Bay Area Air Quality Management District.

20-03 Pavement Restoration. Pavement restoration for public roads shall conform to the requirements of the agency having jurisdiction over the roadway right-of-way. Materials for paving and surfacing shall conform to the applicable provisions of the State Standard Specifications and the County Specifications.

Pavement thickness shall match the thickness of the adjoining pavement or the thickness indicated on the drawings, whichever is greater.

20-04 Pavement Cutting. Trenches and other excavations in asphalt paved areas shall be cut by means of a saw or jackhammer equipped with a spade tool to the full depth of the pavement as required by the agency having jurisdiction over the street. Pavement cuts shall be laid out by a chalk line and care shall be taken to ensure neat, straight edges.

After the District has approved a section of trench for final paving, the Contractor shall strip out all temporary pavement to the full depth of the new pavement section as specified. Spalled or cracked sections of pavement beyond the excavation limits which, in the opinion of the District, show signs of having separated from the adjoining pavement or are moveable, shall be removed and replaced with new pavement. Broken edges of pavement shall be trimmed along lines parallel to the trench edges. Exposed subgrade materials shall be compacted to the same standards as the adjoining trench backfill.

20-05 Pavement Grinding - Where required, existing pavement shall be ground down to make a smooth joint with existing gutters and joints with existing pavement. All pavement grinding shall be done in accordance with Section 42 of the State Standard Specifications.

20-06 Aggregate Base. Aggregate base shall be Class 2, conforming to Section 26 of the State Standard Specifications. Minimum relative compaction shall be 95%. Base shall be placed and compacted prior to placing of temporary paving.

20-07 Asphalt Concrete. Asphalt concrete shall conform to the applicable requirements of Section 39 of the State Standard Specifications for Type B aggregate or as modified by the agency with jurisdiction over the street. Paragraph 39-8 is not applicable. Surface courses shall be constructed using ½-inch maximum graded aggregate. Lower courses shall be constructed using ¾-inch maximum graded aggregate.

Paving asphalt shall be Grade AR-4000, conforming to the requirements of Section 92 of the State Standard Specifications. Four to six percent (4-6%) bituminous binder shall be provided.

Bituminous mixtures shall be delivered to the roadbed at temperatures specified in Section 39 of the State Standard Specifications. Spreading of the mixture shall be in accordance with Section 39 of the State Standard Specifications. All loads shall be covered with tarpaulin or other material during transportation.

Initial or breakdown rolling and the final rolling of the uppermost layer of the asphalt concrete shall be compacted in accordance with Section 39 of the State Standard Specifications. Compaction by vehicular traffic shall not be permitted.

The joints between old and new pavements or between successive days' work shall be carefully made in such manner as to insure a continuous bond between old and new sections of the course. After the trench has been backfilled, edges of the existing pavement shall be exposed and cleaned and retrimmed to straight, vertical surfaces. All joints shall be painted with a uniform coat of tack coat before the fresh mixture is placed. Each lift of asphalt concrete shall be allowed to cool down before the next lift is placed. Before the final lift of asphalt concrete is placed, the edges of the trench shall be tacked with RS-1 asphaltic emulsion.

20-08 Slurry Seal. Where shown on the plans, the Contractor shall place a slurry seal. Slurry seal materials shall conform to the requirements of the State Standard Specifications, Section 37-2.

20-09 Conformance to Existing Improvements. Asphalt concrete overlays shall be tapered to conform to existing paving, gutters, catch basins, etc.

20-10 Raising Existing Castings to Grade. After the final paving is placed, the Contractor shall raise all existing monuments, valves, manholes and other castings to the final surface elevation. The method of raising the castings to grade shall conform the requirements of the agency having jurisdiction over the street.

20-11 Restoration of Striping and Pavement Markers. After the final paving is complete, the Contractor shall stripe the new pavement and provide new pavement markers and delineators to replace the old ones. Traffic stripes and pavement markings shall conform to Sections 84

and 85 of the State Standard Specifications. Markers and delineators shall conform to Section 82 of the State Standard Specifications. No work shall be done until the layout is approved by the agency having jurisdiction over the street. Restoration of striping and pavement markings shall be included in the cost of pavement restoration.

20-12 Unpaved Travel Surfaces. Trenches in unpaved areas of private streets shall be surfaced with a minimum of twelve (12) inches of Class 2 Aggregate Base.

20-13 Concrete Surfaces. All concrete curbs, gutters, aprons, patios, driveways and sidewalks which are broken, cracked or damaged by installation of the improvements shall be reconstructed by and at the expense of the Contractor, of the same kind of material and of the same dimensions as the original work, conforming to the requirements of Section 43 of the County Specifications. The repairs shall be made by removing and replacing the entire portions between joints or by removing the damaged portions by concrete saw and not be merely refinishing the damaged part. All work shall match the appearance of the existing improvements as nearly as practicable. Lamp black or other pigments may be added to the concrete to obtain the necessary result.

20-14 Landscaped or Cultivated Areas. All excavations or trenches in landscaped or cultivated areas shall have the top twelve (12) inches backfilled with top soil. The top soil shall consist of fertile, friable soil of loamy character conforming to the requirements of Section 20-2.01 of the State Standard Specifications or as specified in the Special Provisions. With specific approval from the District, the Contractor may use top soil taken from the excavation. After installation, the top soil and any adjacent unimproved land which has been compacted by the operations of the Contractor shall be thoroughly scarified and the surface cleared of all large clods, stones or debris.

PART E - STANDARD DRAWINGS

	Drawing Number
Standard Manhole Frame and Cover	SD 1
Standard Sewer Manhole	SD 2.0
Manhole Repair to Raise Frame & Cover	SD 2.1
Standard 6-Inch Rodding Inlet	SD 3
Typical Trench Section	SD 4
Typical Side Sewer Details	SD 5
Standard Cleanout and Backwater Prevention Device	SD 6
Backwater Check Valve and Shutoff System	SD 7
Main Sewer Protection Above Utility Crossing	SD 8
Main Sewer Protection Below Utility Crossing	SD 9
Side Sewer Protection Above Utility Crossing	SD 10
Side Sewer Protection Below Utility Crossing	SD 11
Side Sewer Reconstruction at Utility Crossing	SD 12
Standard Concrete Pipe Protection	SD 13
Force Main Valve	SD 14
Standard Redwood Check Board	SD 15
Standard Rip-Rap Installation	SD 16
Residential Sewage Pumping System	SD 17
Allowable Leakage Chart Water Test	SD 18

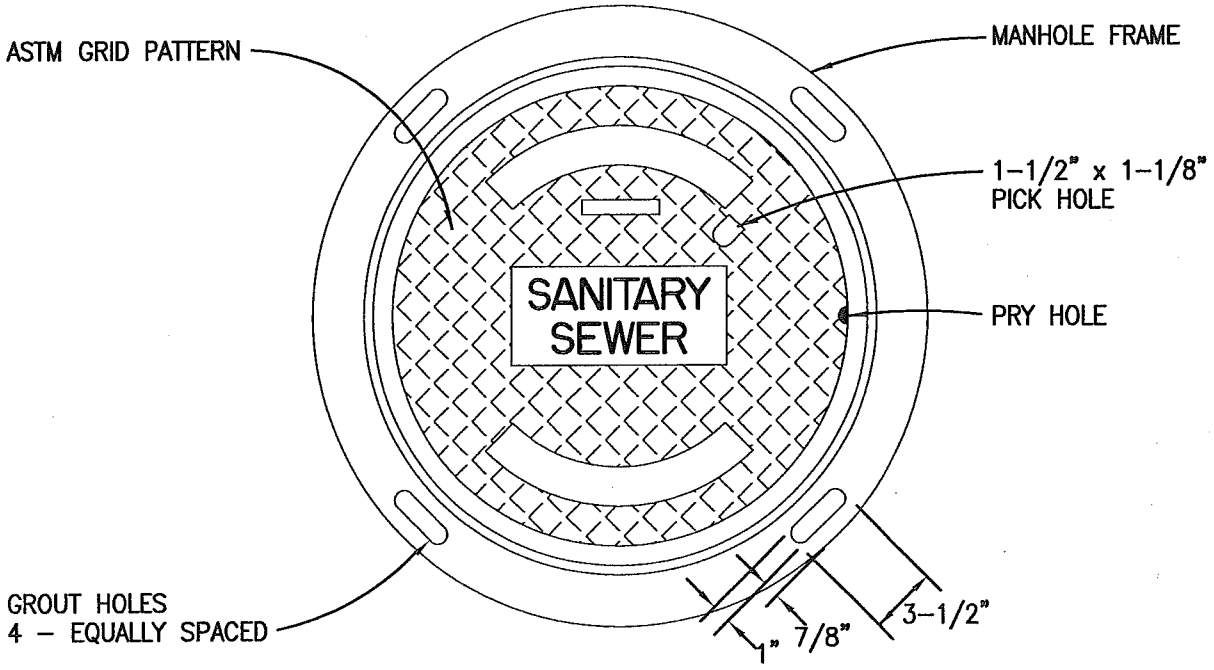

PLAN

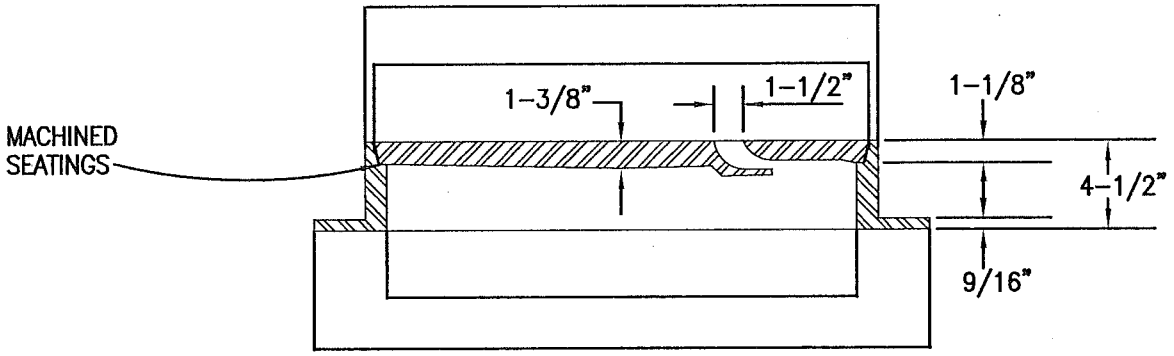

SECTION THRU FRAME AND COVER

NOTES:

1. MANHOLE FRAME AND COVER SHALL BE AS MANUFACTURED BY PHOENIX IRON WORKS, OAKLAND, NO. P-1090 OR APPROVED EQUIVALENT.
2. FOR MANHOLES LOCATED IN SIDEWALK AREAS USE PHOENIX NO. P-1067 FRAME AND COVER OR APPROVED EQUIVALENT.
3. MINIMUM WEIGHT OF FRAME IS 138 LBS. MINIMUM WEIGHT OF COVER IS 130 LBS.

MARIN COUNTY SANITARY DISTRICTS CALIFORNIA		
STANDARD MANHOLE FRAME AND COVER		
1995		**SD 1**

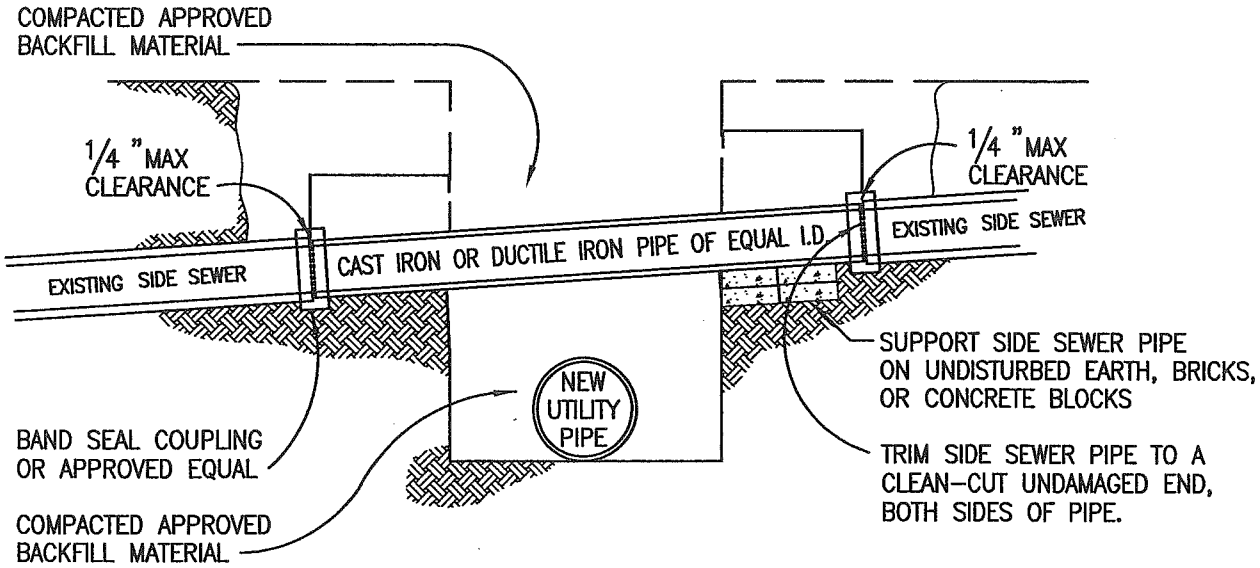

NOTES:

1. SEWER PROTECTION, AS DETAILED HEREON, SHALL BE PROVIDED WHEN ANY NEW UTILITY PIPE IS INSTALLED BELOW AN EXISTING SIDE SEWER.
2. BACKFILL AROUND NEW UTILITY PIPE MUST BE PLACED AND COMPACTED BEFORE SIDE SEWER PIPE INSTALLATION.
3. BACKFILL ABOVE SIDE SEWER SHALL NOT BE PLACED UNTIL PIPE INSTALLATION HAS BEEN INSPECTED AND APPROVED BY THE DISTRICT.
4. WHEN THE CLEARANCE BETWEEN THE PIPES IS 1" OR LESS, INSTALL A 4" x 4" PAD OF 35-45 DUROMETER RUBBER SNUGLY FIT BETWEEN THE PIPES.

MARIN COUNTY SANITARY DISTRICTS CALIFORNIA		
SIDE SEWER PROTECTION ABOVE UTILITY CROSSING		
1995		**SD 10**

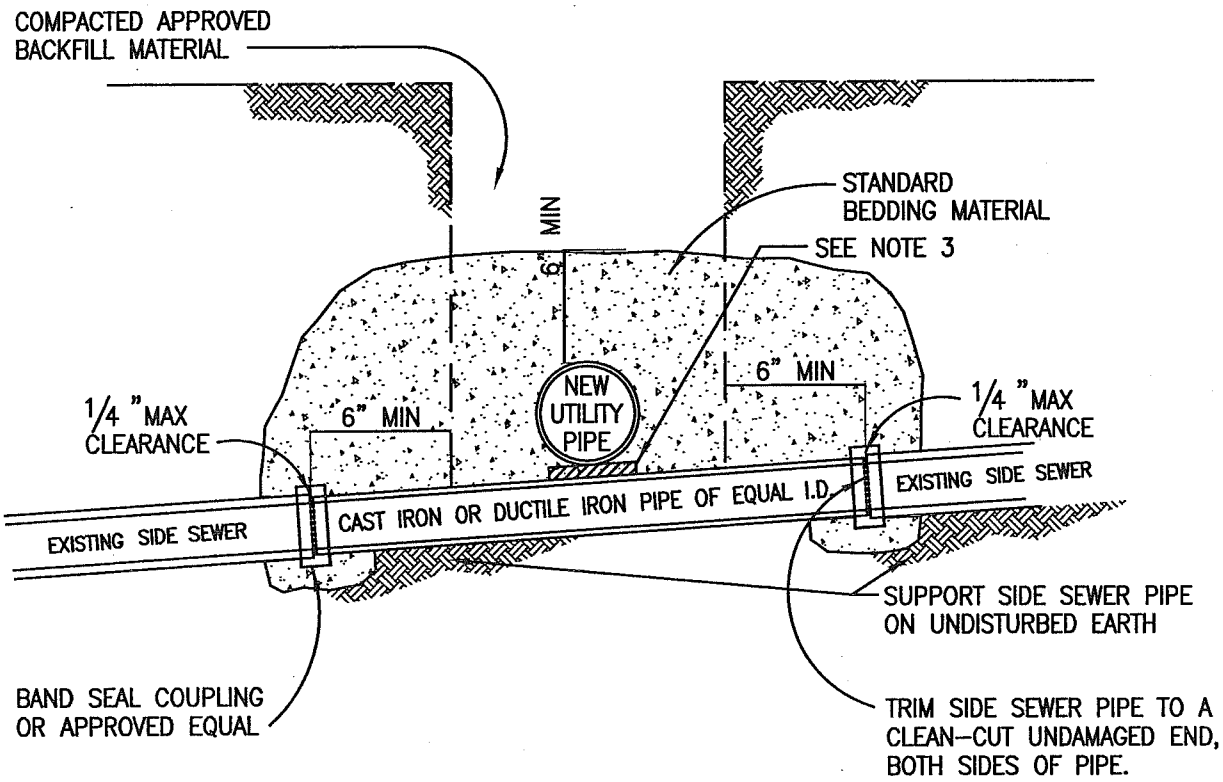

NOTES:

1. SEWER PROTECTION, AS DETAILED HEREON, SHALL BE PROVIDED WHEN ANY NEW UTILITY PIPE IS INSTALLED ABOVE AN EXISTING SIDE SEWER AND THE CLEARANCE IS LESS THAN 12".
2. BACKFILL SHALL NOT BE PLACED UNTIL PIPE INSTALLATION HAS BEEN INSPECTED AND APPROVED BY THE DISTRICT.
3. WHEN THE CLEARANCE BETWEEN THE PIPES IS 1" OR LESS, INSTALL A 4" x 4" PAD OF 35–45 DUROMETER RUBBER SNUGLY FIT BETWEEN THE PIPES.

MARIN COUNTY SANITARY DISTRICTS CALIFORNIA		
SIDE SEWER PROTECTION BELOW UTILITY CROSSING		
1995		**SD 11**

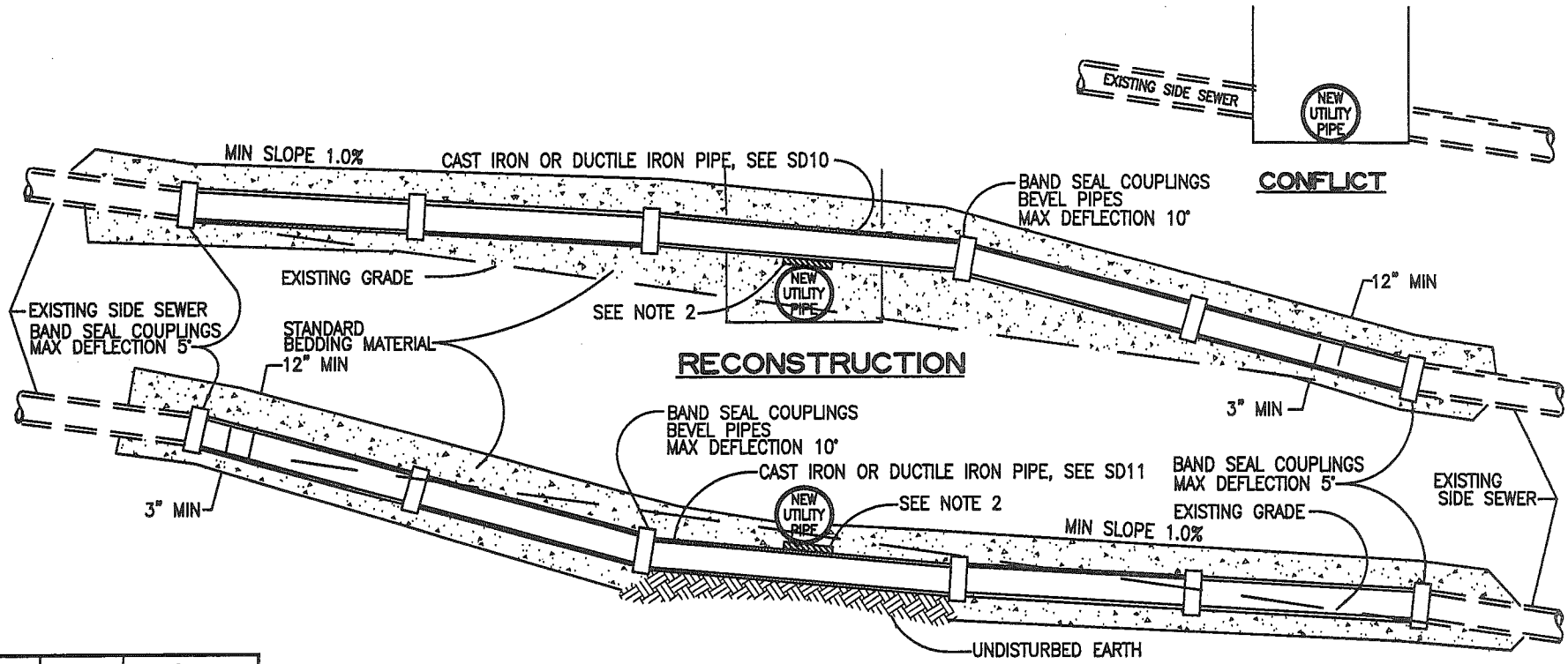

RECONSTRUCTION

NOTES:

1. WHEN ANY NEW UTILITY PIPE OR CONDUIT CONFLICTS WITH AN EXISTING SEWER LINE GRADE, THE UTILITY PIPE OR CONDUIT SHALL BE RAISED OR LOWERED, IF POSSIBLE, TO MISS THE SEWER LINE. IF IT IS NOT POSSIBLE TO MOVE THE UTILITY LINE, WRITTEN PERMISSION SHALL BE OBTAINED FROM THE SANITARY DISTRICT, AND THE SEWER LINE SHALL BE RECONSTRUCTED IN ACCORDANCE WITH ONE OF THE DETAILS ABOVE AND THE STANDARD SPECIFICATIONS OF THE DISTRICT.
2. WHEN THE CLEARANCE BETWEEN THE PIPES IS 1" OR LESS, INSTALL A 4" x 4" PAD OF 35–45 DUROMETER RUBBER SNUGLY FIT BETWEEN THE PIPES.

MARIN COUNTY SANITARY DISTRICTS CALIFORNIA	
SIDE SEWER RECONSTRUCTION AT UTILITY CROSSING	
1995	SD 12

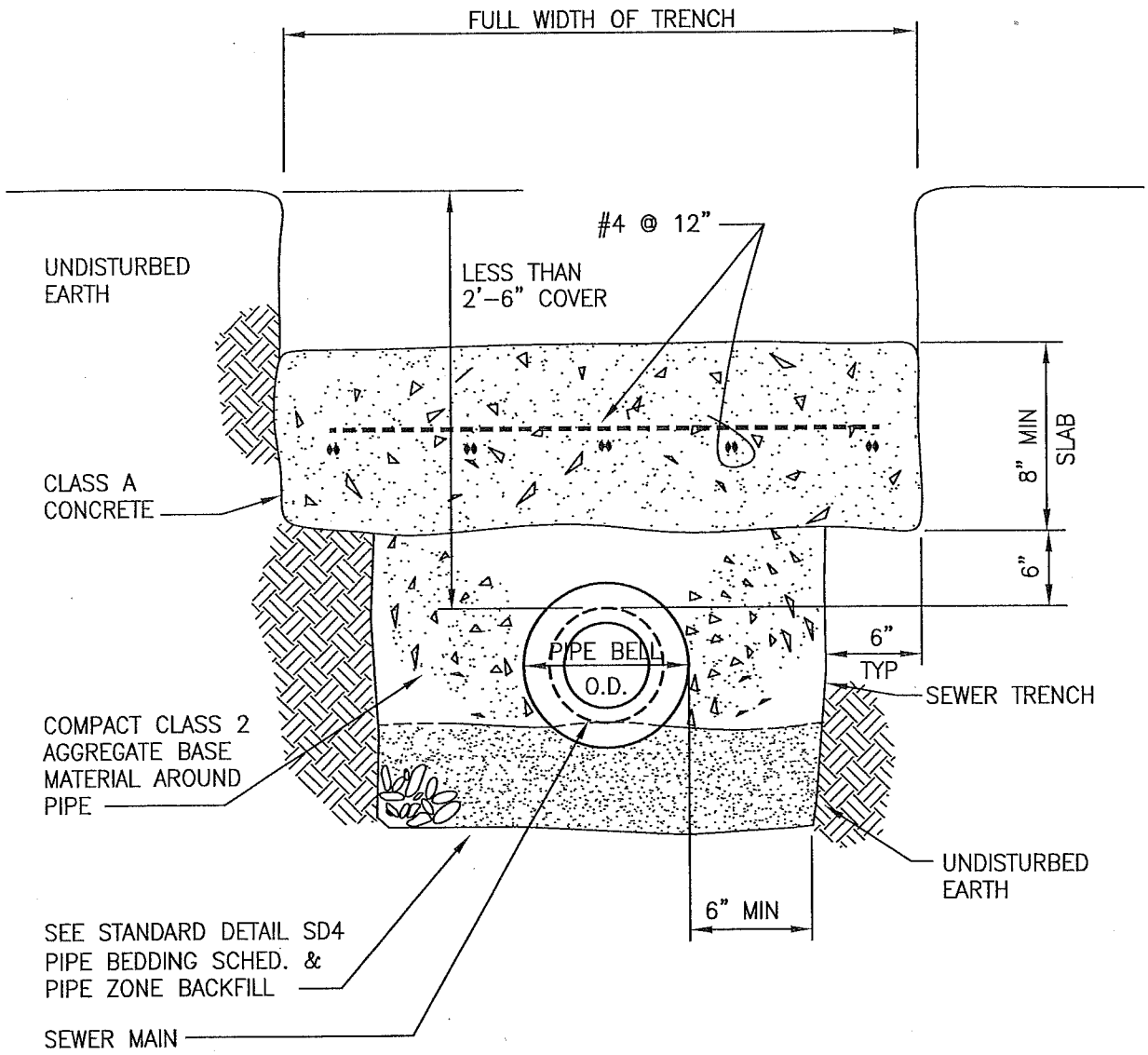

MARIN COUNTY SANITARY DISTRICTS CALIFORNIA		
STANDARD CONCRETE PIPE PROTECTION		
1995		**SD 13**

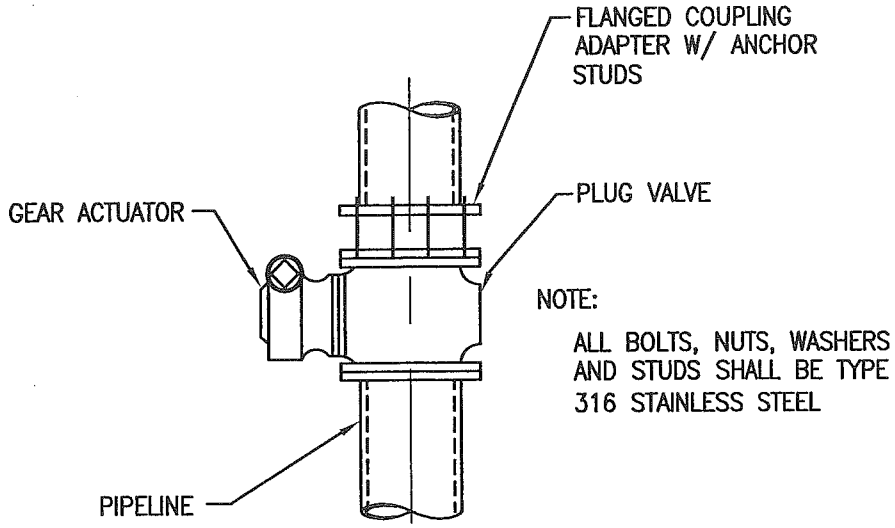

NOTE:

ALL BOLTS, NUTS, WASHERS AND STUDS SHALL BE TYPE 316 STAINLESS STEEL

PLAN VIEW

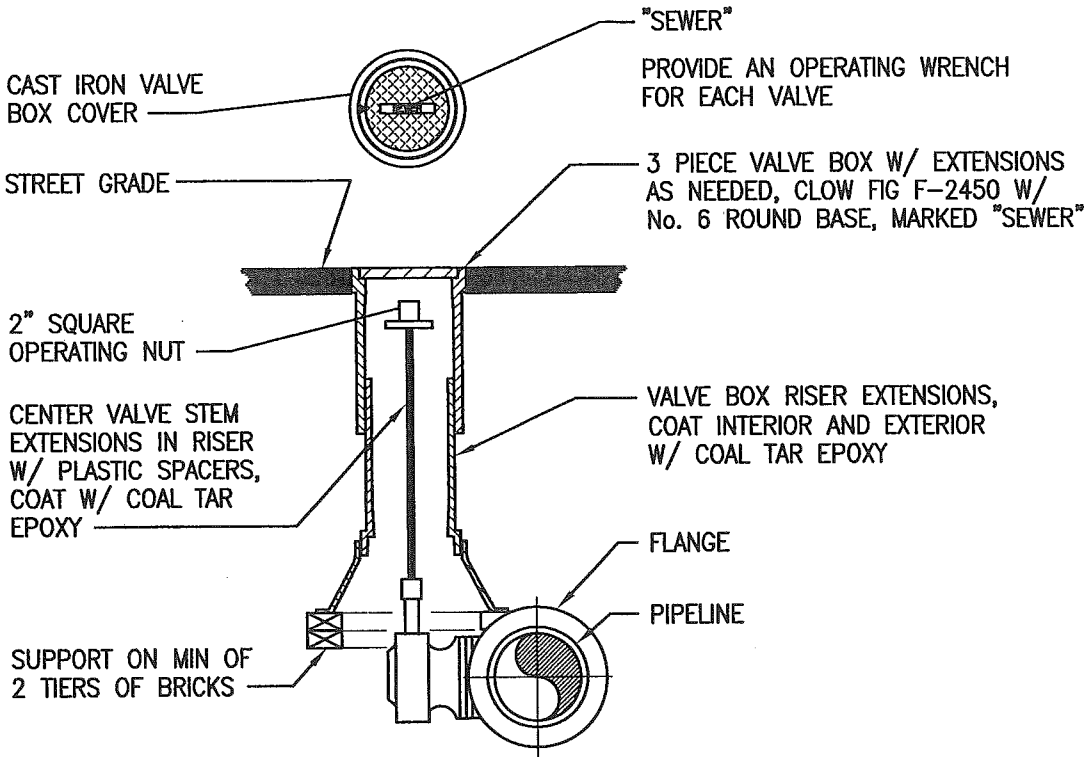

SECTION

NOTE:

ALL BURIED VALVES, GEAR ACTUATORS, FLEX COUPLINGS AND HARNESSES SHALL BE COATED AND WRAPPED PER SPECIFICATIONS.

MARIN COUNTY SANITARY DISTRICTS CALIFORNIA		
FORCE MAIN VALVE		
1995		**SD 14**

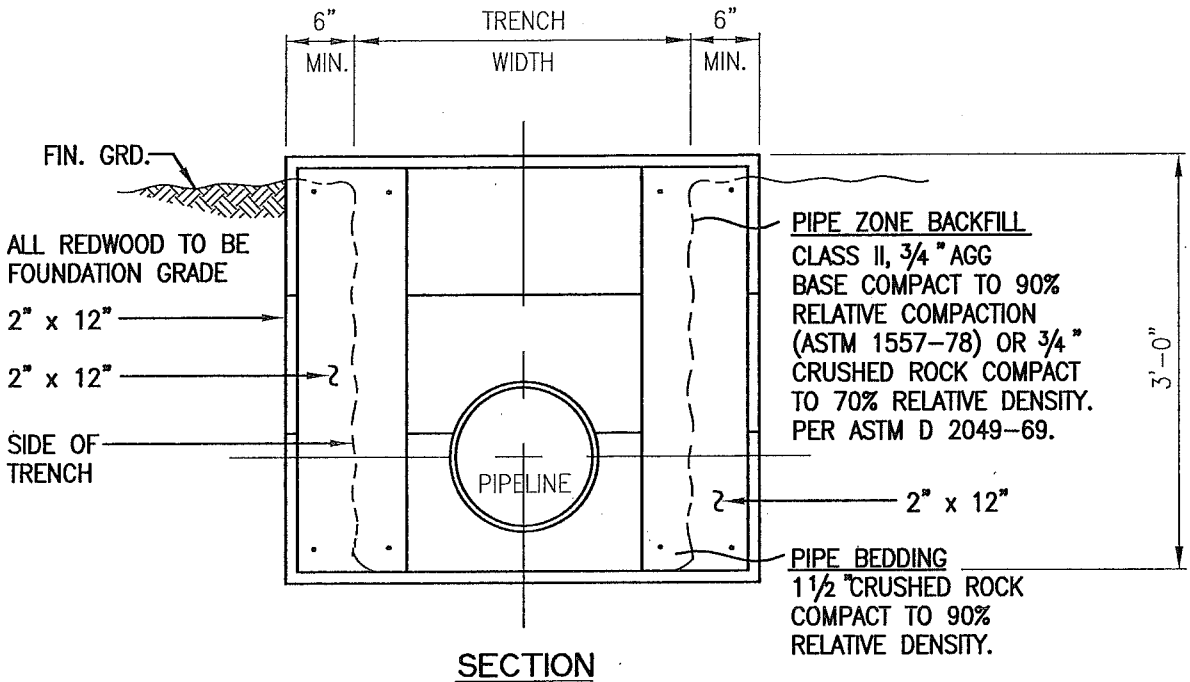

SECTION

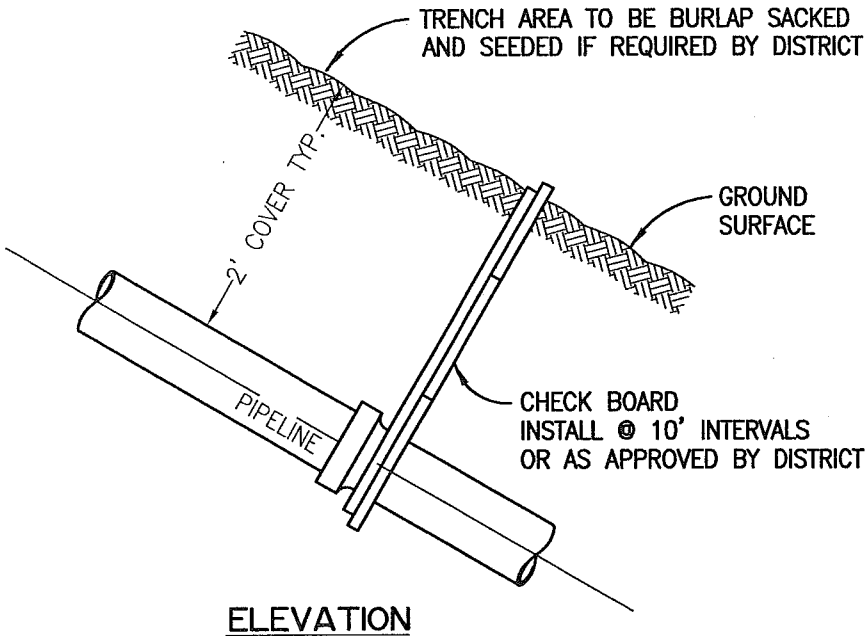

ELEVATION

NOTES:

1. CHECK BOARDS TO BE PLACED ON ALL SLOPES GREATER THAN 50% OR WHERE REQUIRED BY THE DISTRICT.
2. ALL SLOPES 50% OR GREATER SHALL HAVE CLASS 150 C.I. BELL & SPIGOT PIPE.

MARIN COUNTY SANITARY DISTRICTS CALIFORNIA		
STANDARD REDWOOD CHECK BOARD		
1995		**SD 15**

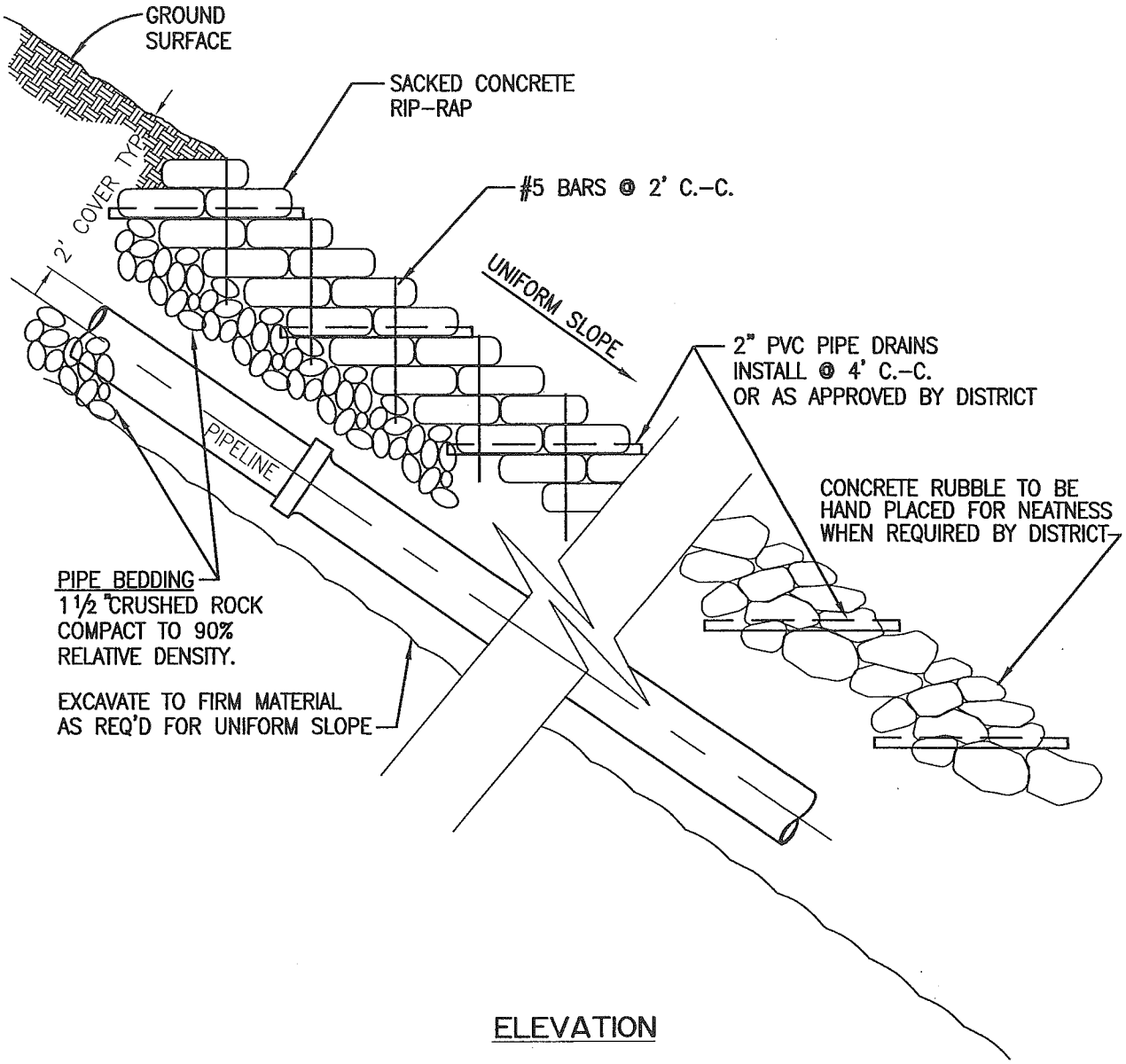

ELEVATION

NOTES:
1. CHECK BOARDS TO BE PLACED ON ALL SLOPES GREATER THAN 50% OR WHERE REQUIRED BY THE DISTRICT. SEE SD-15.
2. ALL SLOPES 50% OR GREATER SHALL HAVE CLASS 150 C.I. BELL & SPIGOT PIPE.

MARIN COUNTY SANITARY DISTRICTS CALIFORNIA		
STANDARD RIP-RAP INSTALLATION		
1995		SD 16

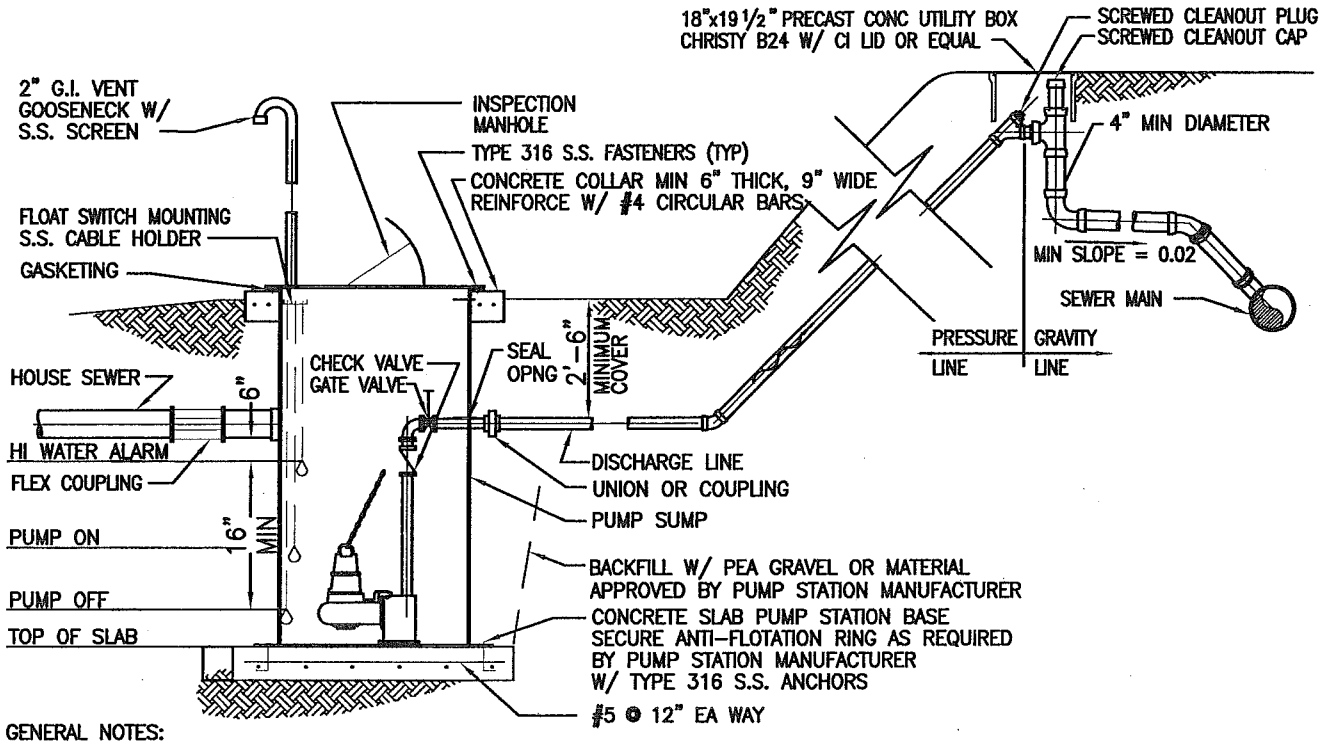

GENERAL NOTES:

THE MINIMUM REQUIREMENTS FOR A RESIDENTIAL SEWAGE PUMPING SYSTEM CONNECTING A SINGLE RESIDENCE OR EQUIVALENT TO THE DISTRICT'S SYSTEM ARE SPECIFIED BELOW. THE DISTRICT ACCEPTS NO RESPONSIBILITY FOR THE DESIGN, OPERATION OR MAINTENANCE OF SUCH PRIVATELY OWNED AND OPERATED SYSTEMS. ALL WORK SHALL COMPLY WITH THE UNIFORM PLUMBING AND BUILDING CODES.

MANUFACTURERS:
ALL EQUIPMENT AND ACCESSORIES SHALL BE INDUSTRY STANDARD MANUFACTURED ITEMS AND THOSE COMING IN DIRECT CONTACT WITH SEWAGE SHALL BE SPECIFICALLY MANUFACTURED FOR SEWAGE USE.

PUMPS:
PUMPS SHALL BE SUBMERSIBLE SOLIDS HANDLING OR GRINDER TYPE SEWAGE PUMPS. PUMP MOTORS FOR RESIDENTIAL SERVICE SHALL BE EXPLOSION PROOF OR MEET CLASS 1, DIVISION 2 REQUIREMENTS PER NEC. ALL COMMERCIAL INSTALLATIONS SHALL CONSIST OF DUPLEX EXPLOSION PROOF PUMPS EACH RATED FOR TOTAL LOADING. ALL PUMP MOTORS SHALL BE UL LISTED.

PUMP SUMP:
THE PUMP SUMP SHALL BE CONSTRUCTED OUT OF NON-CORROSIVE MATERIAL OF SUITABLE STRENGTH TO WITHSTAND HYDRAULIC AND EARTH LOADS. THE PUMP SUMP SHALL BE A MINIMUM 36" DEEP WITH A MINIMUM CAPACITY OF 100 GALLONS AND SHALL BE PROVIDED WITH A FOUR (4) INCH MINIMUM INLET. IN ANY CASE THE INLET I.D. SHALL BE EQUAL TO OR GREATER THAN THE BUILDING PLUMBING STUB. THE TOP OF THE PUMP SUMP SHALL BE GASKETED AND SECURELY ANCHORED TO THE PUMP SUMP BY BOLTS. ALL JOINTS BETWEEN THE COMPONENT PARTS SHALL BE SEALED WITH A WATERPROOF MASTIC.

ELECTRIC POWER SERVICE:
THE POWER REQUIREMENTS SHALL BE AS RECOMMENDED BY PACIFIC GAS AND ELECTRIC COMPANY.

ELECTRICAL WORK AND CONTROLS:
ALL ELECTRICAL WIRING AND INSTALLED CABLING, CONDUIT AND CONTROLS SHALL MEET NEC CLASS 1, DIVISION 2 REQUIREMENTS AND CONFORM TO THE REQUIREMENTS OF THE CITY OR COUNTY. THE ELECTRICAL CONTROLS SHALL PROVIDE ADEQUATE PROTECTION FOR MOTOR AND EQUIPMENT. THE ELECTRICAL CONTROL PANEL SHALL MEET NEC AND UL STANDARDS FOR SAFETY. OUTDOOR PANELS SHALL BE WEATHER TIGHT NEMA 4X. INDOOR PANELS SHALL BE NEMA 1.

FLOAT SWITCH ASSEMBLY AND HIGH-WATER ALARM:
A VISIBLE RED LIGHT AND AUDIBLE HIGH WATER ALARM SHALL BE PROVIDED. THE HIGH WATER ALARM SHALL BE ACTIVATED BY A DEDICATED FLOAT AND SHALL HAVE BATTERY BACKUP. ALL FLOAT SWITCHES SHALL HAVE GAS-TIGHT MOUNTINGS.

VENT FOR PUMP SUMP:
WHERE SYSTEM IS LOCATED WITHIN THE DWELLING, A VENT TWO (2) INCHES OR LARGER SHALL BE PROVIDED. WHERE SYSTEM IS LOCATED OUTSIDE THE DWELLING, A TWO (2) INCH OR LARGER VENT SHALL BE EXTENDED TO A POINT TEN (10) FEET ABOVE THE PUMP SUMP COVER.

DISCHARGE LINE:
THE PRESSURE PORTION OF THE DISCHARGE LINE SHALL INCLUDE A CHECK VALVE, GATE VALVE AND FLEXIBLE COUPLINGS AND SHALL BE A MINIMUM 1/2" DIAMETER LARGER THAN THE PUMP DISCHARGE. ALL PIPE, VALVES AND COUPLINGS SHALL CONFORM TO THE STANDARD SPECIFICATIONS. THE GRAVITY PORTION OF THE DISCHARGE LINE SHALL BE FOUR (4) INCH MINIMUM DIAMETER PIPE, SHALL MEET THE DISTRICT REQUIREMENT FOR SIDE SEWERS AND SHALL PROVIDE A MINIMUM TWELVE (12) INCH VERTICAL DROP AT THE JUNCTION WITH THE PRESSURE LINE.

MARIN COUNTY SANITARY DISTRICTS
CALIFORNIA

RESIDENTIAL SEWAGE PUMPING SYSTEM

1995		SD 17

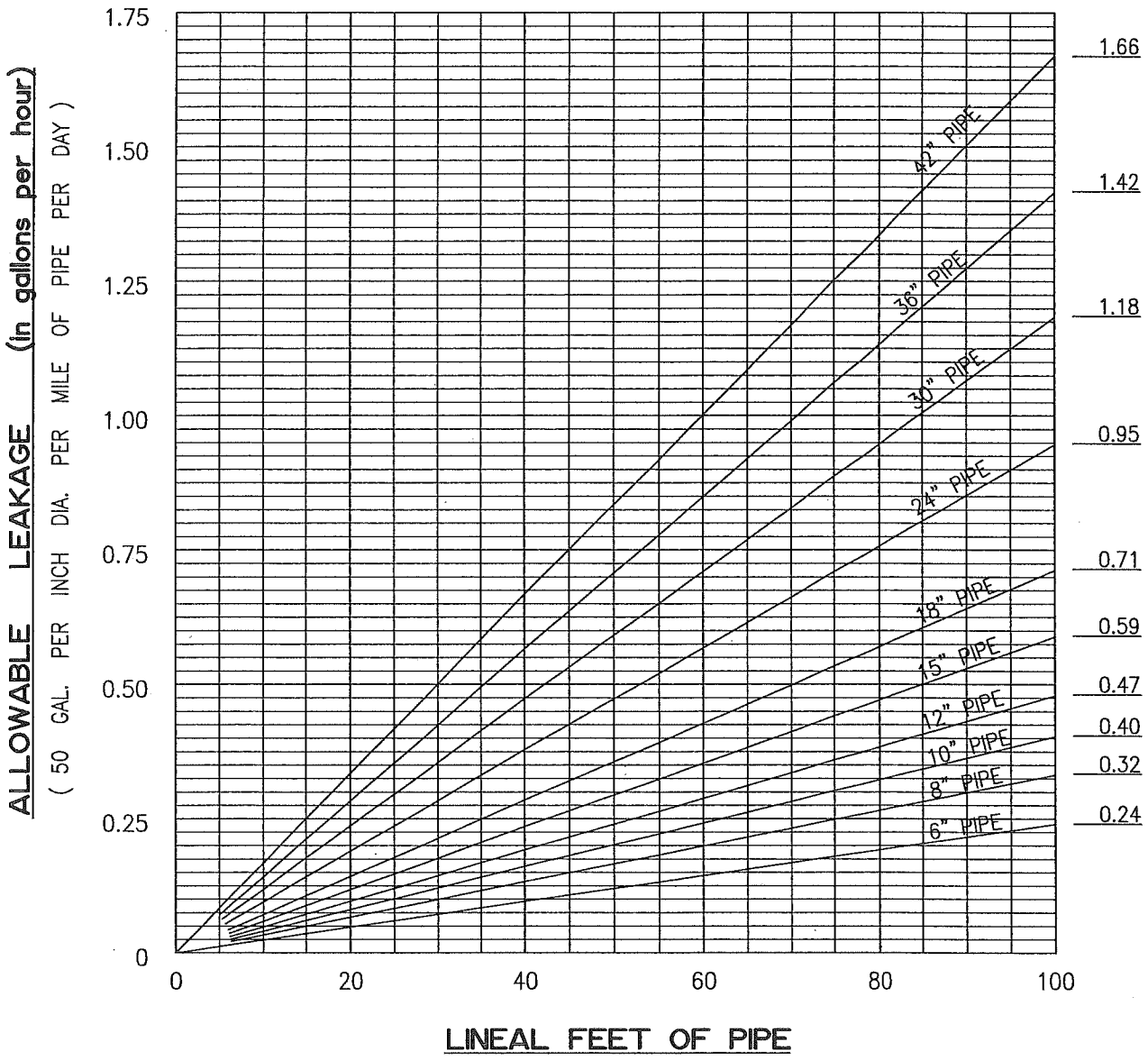

CONVERSION TABLE		
DIA. OF PIPE OR M.H. IN INCHES	GAL PER FT. OF DEPTH IN PIPE OR M.H.	GAL PER INCH OF DEPTH IN PIPE OR M.H.
6" PIPE	1.5 GAL./FT.	0.125 GAL./IN.
8" PIPE	2.6 GAL./FT.	0.217 GAL./IN.
10" PIPE	4.1 GAL./FT.	0.342 GAL./IN.
15" PIPE	5.9 GAL./FT.	0.492 GAL./IN.
12" PIPE	9.2 GAL./FT.	0.766 GAL./IN.
24" PIPE	23.4 GAL./FT.	1.950 GAL./IN.
48" PIPE	52.7 GAL./FT.	4.390 GAL./IN.
36" M.H.	94.0 GAL./FT.	7.830 GAL./IN.
60" M.H.	147.0 GAL./FT.	12.250 GAL./IN.

MARIN COUNTY SANITARY DISTRICTS
CALIFORNIA

ALLOWABLE LEAKAGE CHART WATER TEST

1995 | SD 18

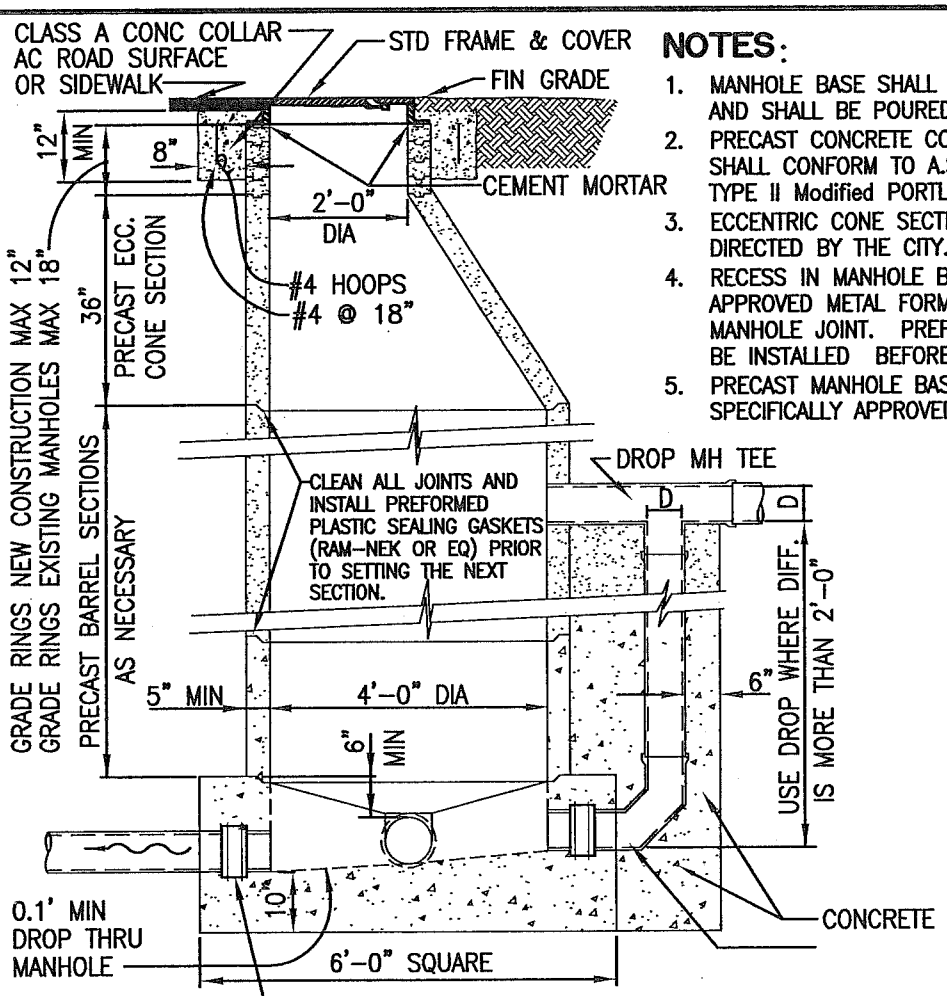

NOTES:

1. MANHOLE BASE SHALL BE CLASS A (6-sack) CONCRETE AND SHALL BE POURED AGAINST UNDISTURBED SOIL.
2. PRECAST CONCRETE CONE, BARREL AND GRADE RINGS SHALL CONFORM TO A.S.T.M. Spec C-478, EXCEPT THAT TYPE II Modified PORTLAND CEMENT SHALL BE USED.
3. ECCENTRIC CONE SECTION SHALL BE POSITIONED AS DIRECTED BY THE CITY.
4. RECESS IN MANHOLE BASE SHALL BE FORMED WITH AN APPROVED METAL FORMING RING TO RECEIVE PRECAST MANHOLE JOINT. PREFORMED PLASTIC SEAL GASKET SHALL BE INSTALLED BEFORE PLACING FIRST BARREL SECTION.
5. PRECAST MANHOLE BASES ARE NOT ALLOWED UNLESS SPECIFICALLY APPROVED BY THE CITY.

SECTION

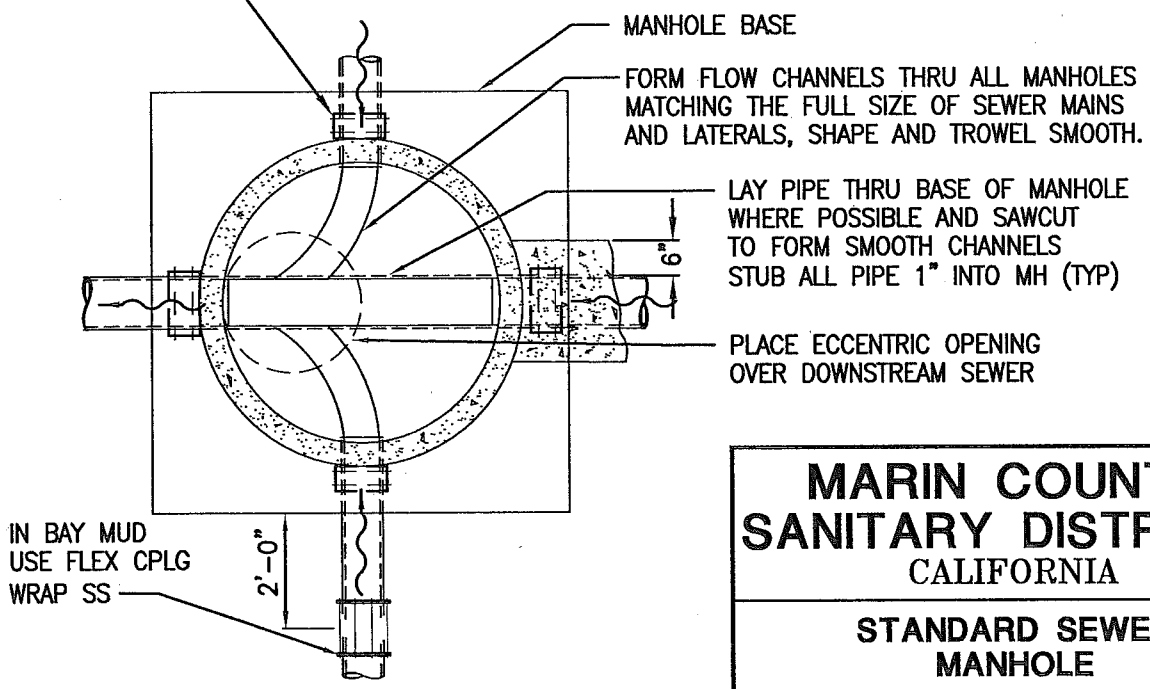

PLAN AT MH BOTTOM

MARIN COUNTY SANITARY DISTRICTS CALIFORNIA		
STANDARD SEWER MANHOLE		
1995		SD 2.0

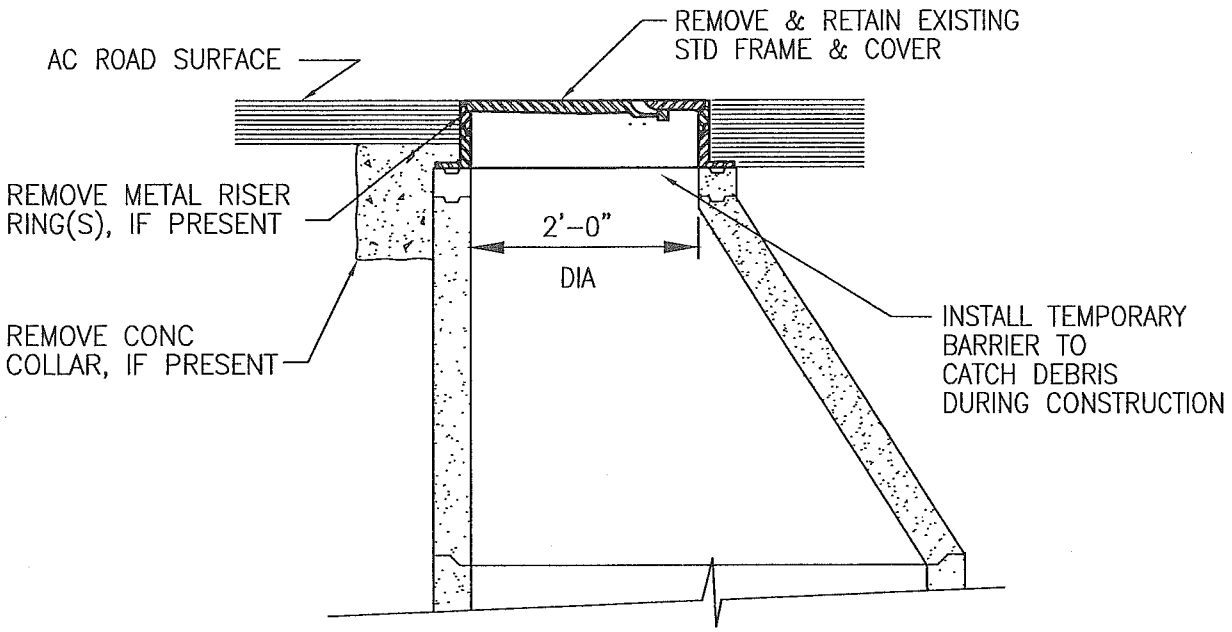

EXISTING CONDITION

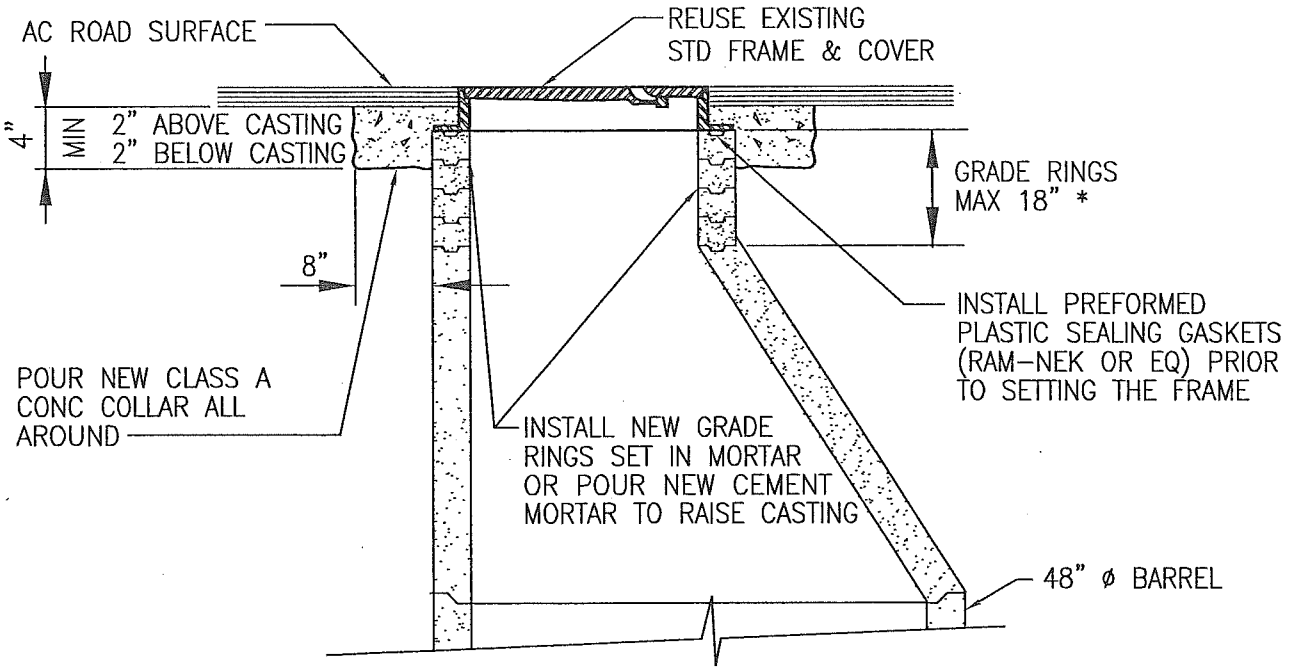

RAISED RING CONDITION

* IF GRADE RINGS EXCEED 18" REMOVE CONE AND INSTALL NEW 48" DIAMETER BARREL SECTION

MARIN COUNTY SANITARY DISTRICTS
CALIFORNIA

MANHOLE REPAIR TO RAISE FRAME & COVER

1995		SD 2.1

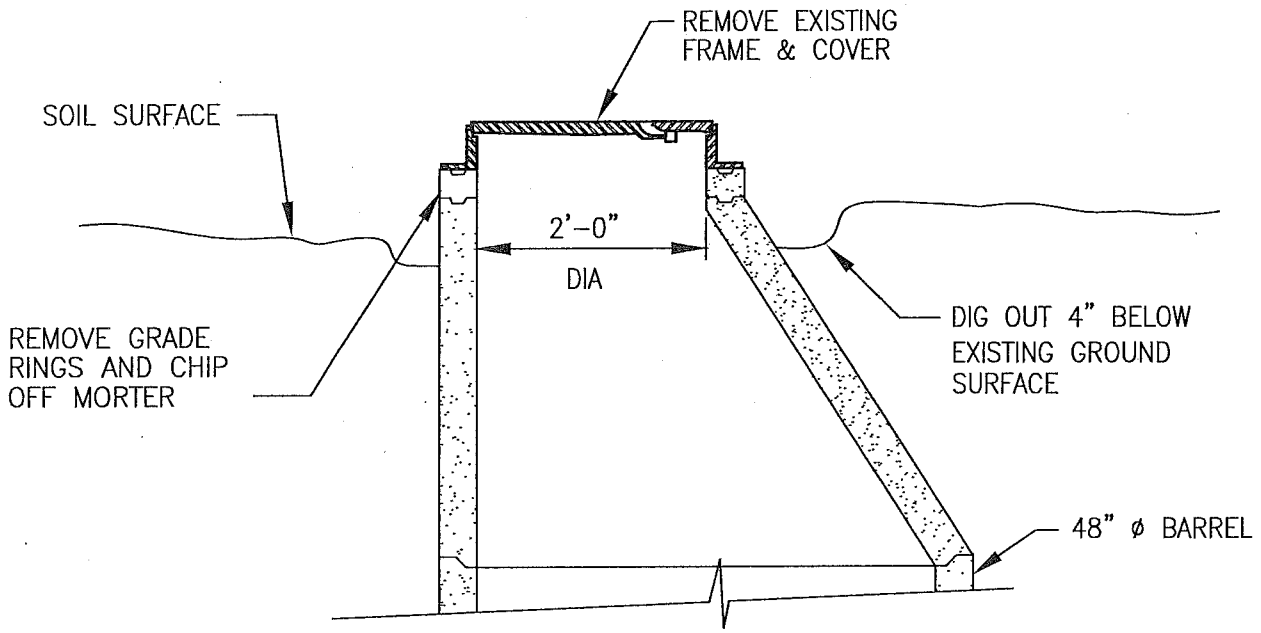

DEMOLITION

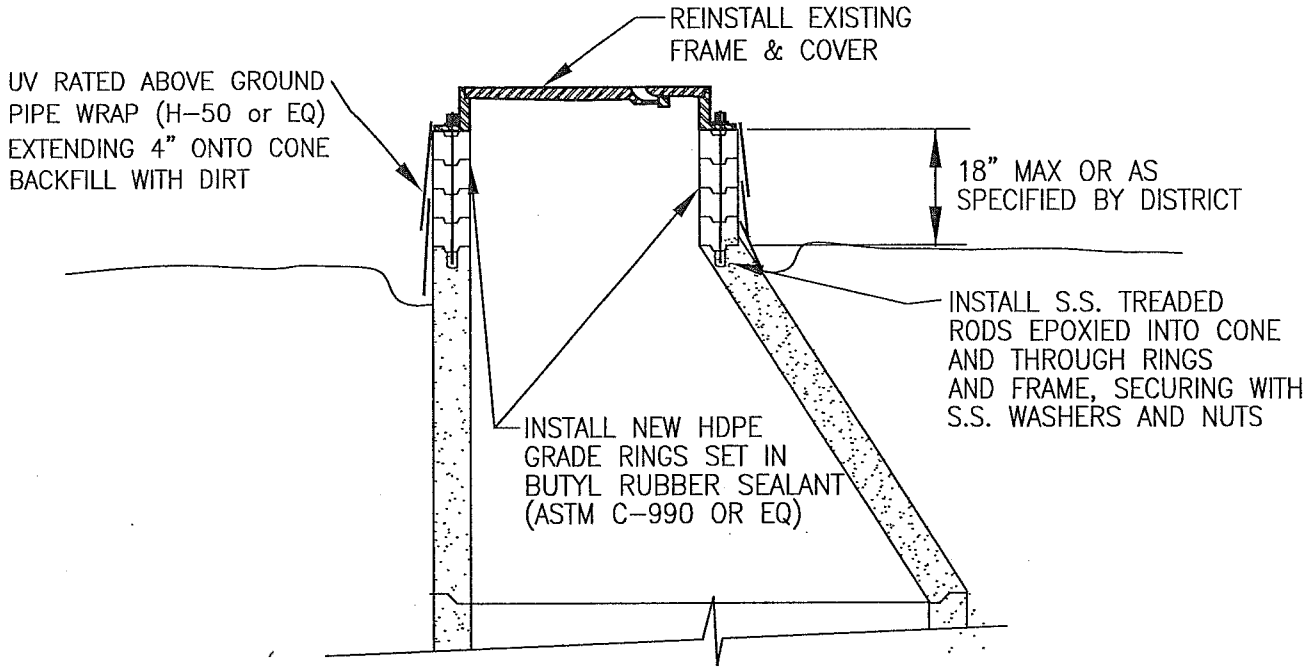

HDPE GRADE RING INSTALLATION

MARIN COUNTY SANITARY DISTRICTS CALIFORNIA		
RAISE MANHOLE COVER WITH HDPE GRADE RINGS		
2003		**SD 2.2**

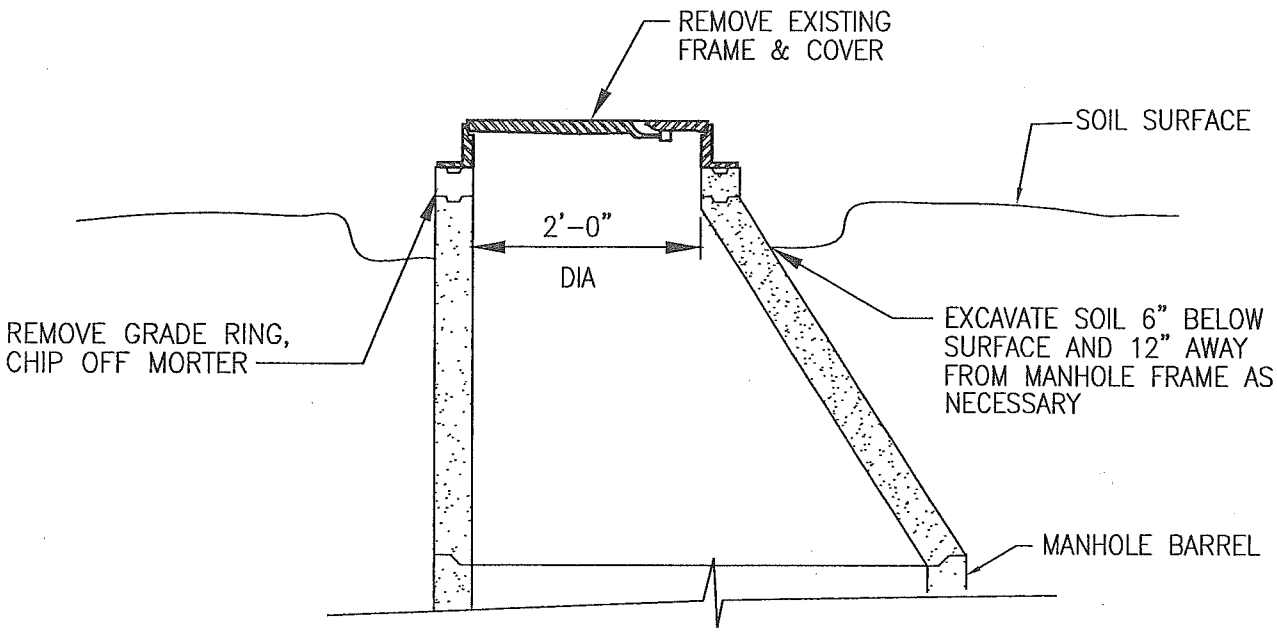

DEMOLITION

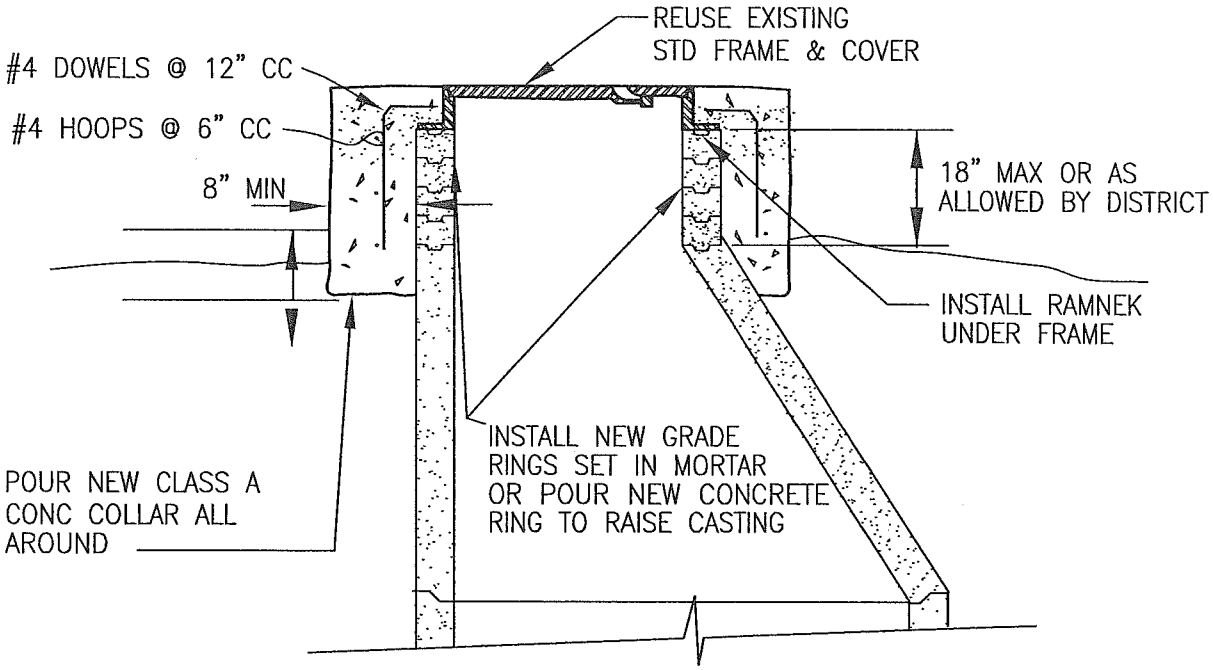

GRADE RING INSTALLATION

MARIN COUNTY SANITARY DISTRICTS CALIFORNIA		
RAISE MANHOLE COVER WITH CONCRETE GRADE RINGS		
2003		SD 2.3

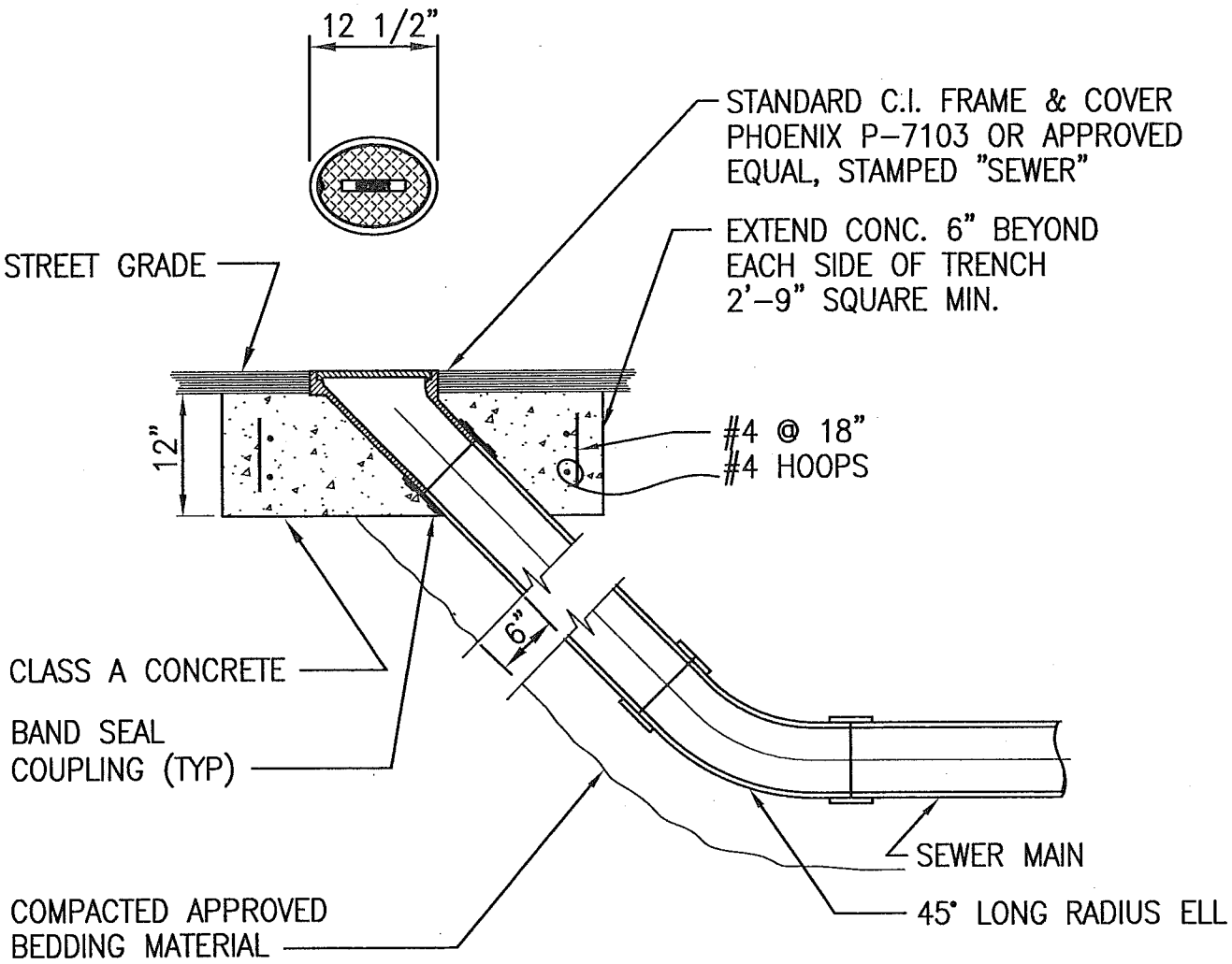

STANDARD ROD HOLE

MARIN COUNTY SANITARY DISTRICTS CALIFORNIA		
STANDARD 6 INCH RODDING INLET		
1995		SD 3

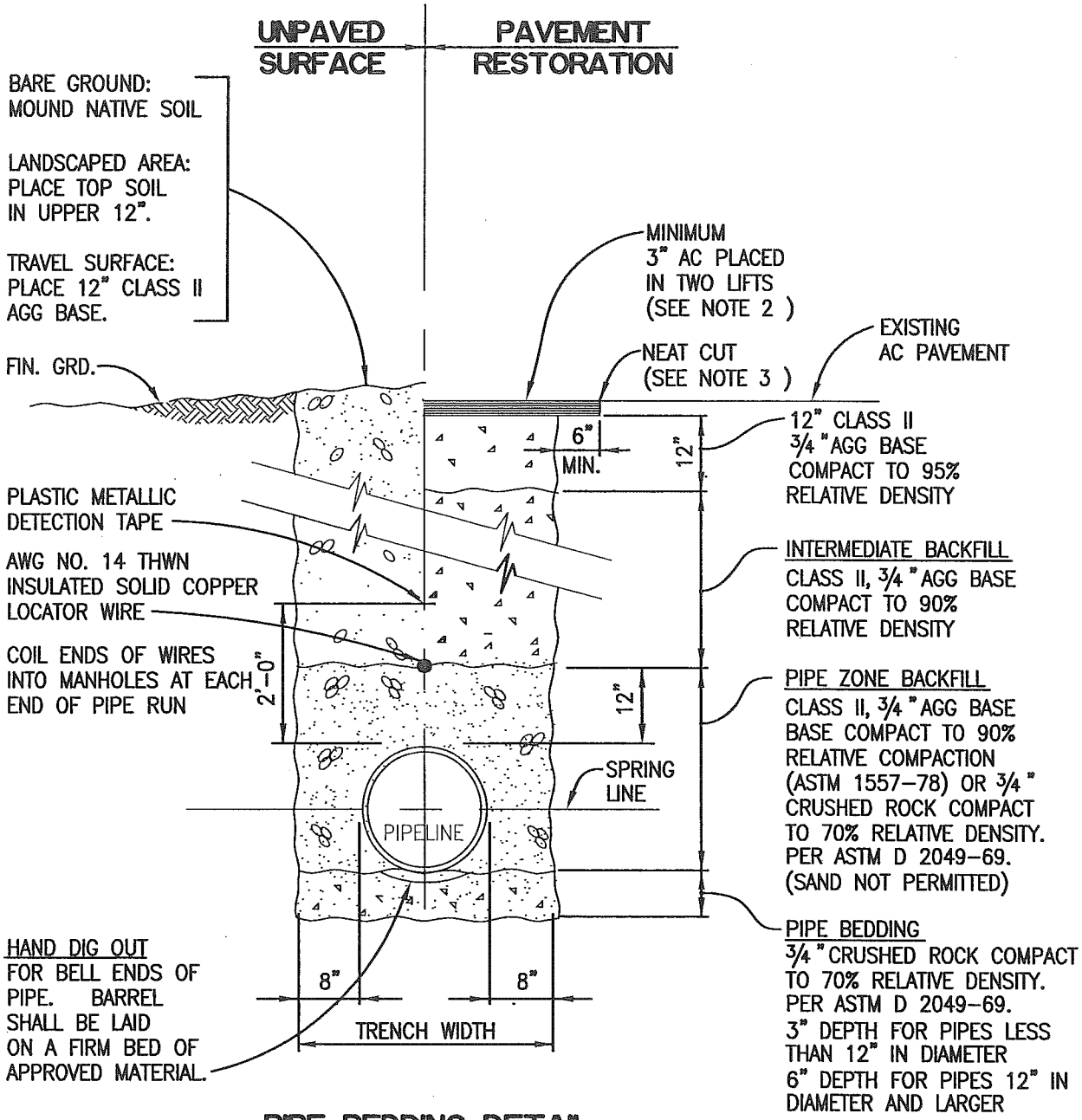

PIPE BEDDING DETAIL

NOTES:

1. INSTALL 4' LONG COMPACTED IMPERVIOUS CLAY OR SLURRY CEMENT PLUGS IN PIPE ZONE BACKFILL AND PIPE BEDDING AT 400' INTERVALS.
2. ASPHALT THICKNESS SHALL CONFORM TO THE REQUIREMENTS OF THE AGENCY WITH JURISDICTION OVER STREET.
3. CONSULT LOCAL JURISDICTION FOR ASPHALT CUTTING REQUIREMENTS.

MARIN COUNTY SANITARY DISTRICTS CALIFORNIA		
TYPICAL TRENCH SECTION		
1995		SD 4

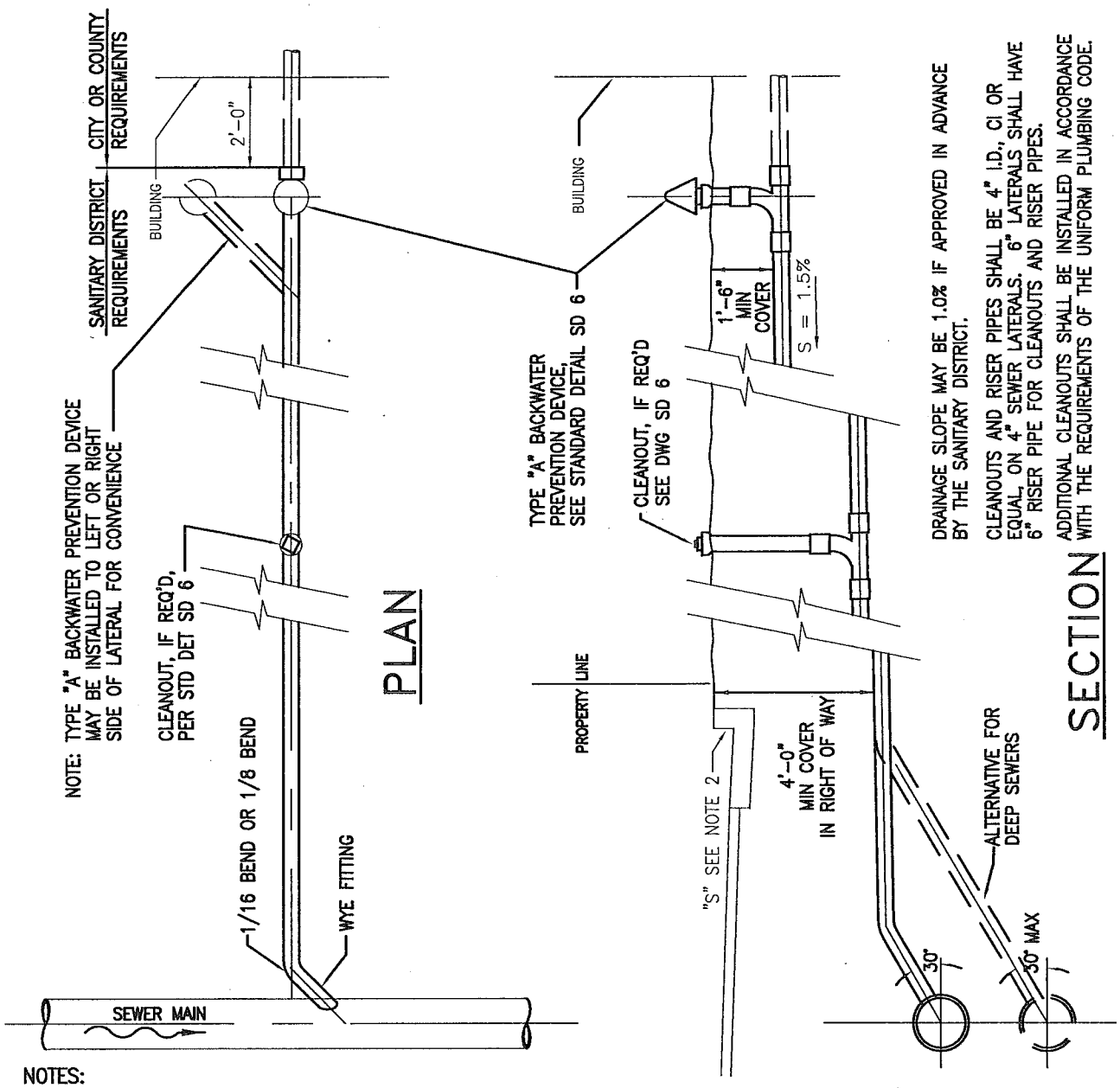

NOTES:

1. WHEN A LATERAL SEWER IS INSTALLED IN ADVANCE OF THE BUILDING SEWER, IT SHALL BE TERMINATED AT OR NEAR THE PROPERTY LINE. THE END OF THE LATERAL SHALL BE MARKED WITH A 4" x 4" REDWOOD STAKE.
2. WHERE CONCRETE CURBS AND GUTTERS EXIST OR ARE TO BE A PART OF AN IMPROVEMENT, EACH SIDE SEWER SHALL BE PERMANENTLY LOCATED BY IMPRINTING OR CHISELING AN "S" (3" size) IN THE FACE OF THE CURB VERTICALLY ABOVE THE SEWER PIPE.
3. BACKFILL SHALL NOT BE PLACED UNTIL PIPE INSTALLATION HAS BEEN INSPECTED AND APPROVED BY THE DISTRICT.
4. LATERAL TRENCHES SHALL BE THE SAME AS TYPICAL TRENCH DETAIL SD4.
5. THE SIZE OF THE SEWER LATERAL OR MAIN MUST BE EQUAL TO OR LARGER THAN THE SIZE OF THE BUILDING DRAIN.

MARIN COUNTY SANITARY DISTRICTS CALIFORNIA		
TYPICAL SIDE SEWER DETAILS		
1995		**SD 5**

CLEANOUTS LOCATED UNDER PAVED DRIVEWAYS, WALKWAYS, ETC. SHALL BE RAISED TO GRADE AND INSTALLED IN PRECAST CONC METER BOXES FLUSH FITTED TO PAVING W/ GALVANIZED STEEL CHECKERED PLATE TRAFFIC LIDS MARKED "SEWER", CHRISTY B9 W/ 61D15 LID, OR EQUAL, AS DIRECTED BY THE DISTRICT.

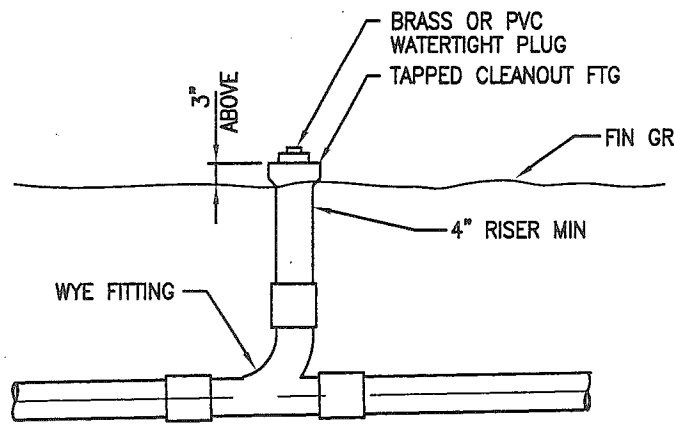

STANDARD CLEANOUT

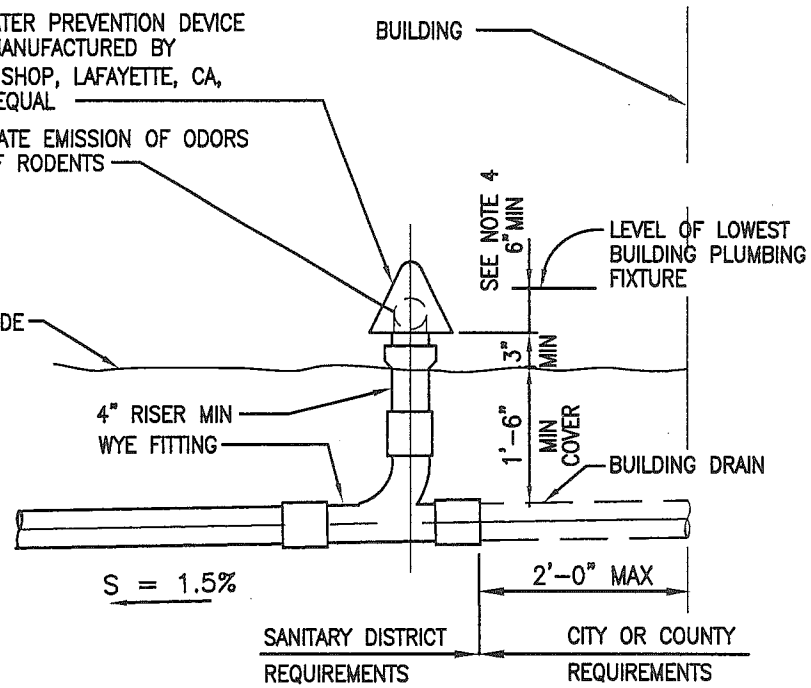

TYPE A BACKWATER PREVENTION DEVICE

NOTES:

1. A STANDARD 4" C.I. CLEANOUT IS THE MINIMUM DISTRICT REQUIREMENT.
2. A BACKWATER PREVENTION DEVICE IS REQUIRED AND SHALL BE INSTALLED ON ALL SIDE SEWERS.
3. A TYPE "A" BACKWATER PREVENTION DEVICE SHALL BE INSTALLED IN A LOCATION WHERE SEWAGE CAN OVERFLOW ON THE SURROUNDING AREA WITHOUT DAMAGE TO PROPERTY.
4. IF THE DIFFERENCE IN ELEVATION OF THE LOWEST FIXTURE AND THE TYPE "A" BACKWATER PREVENTION DEVICE IS LESS THAN SIX (6) INCHES, A BACKWATER CHECK VALVE SHALL BE INSTALLED AS SHOWN IN STANDARD DETAIL SD 7.

MARIN COUNTY
SANITARY DISTRICTS
CALIFORNIA

STANDARD CLEANOUT AND BACKWATER PREVENTION DEVICE

1995

SD 6

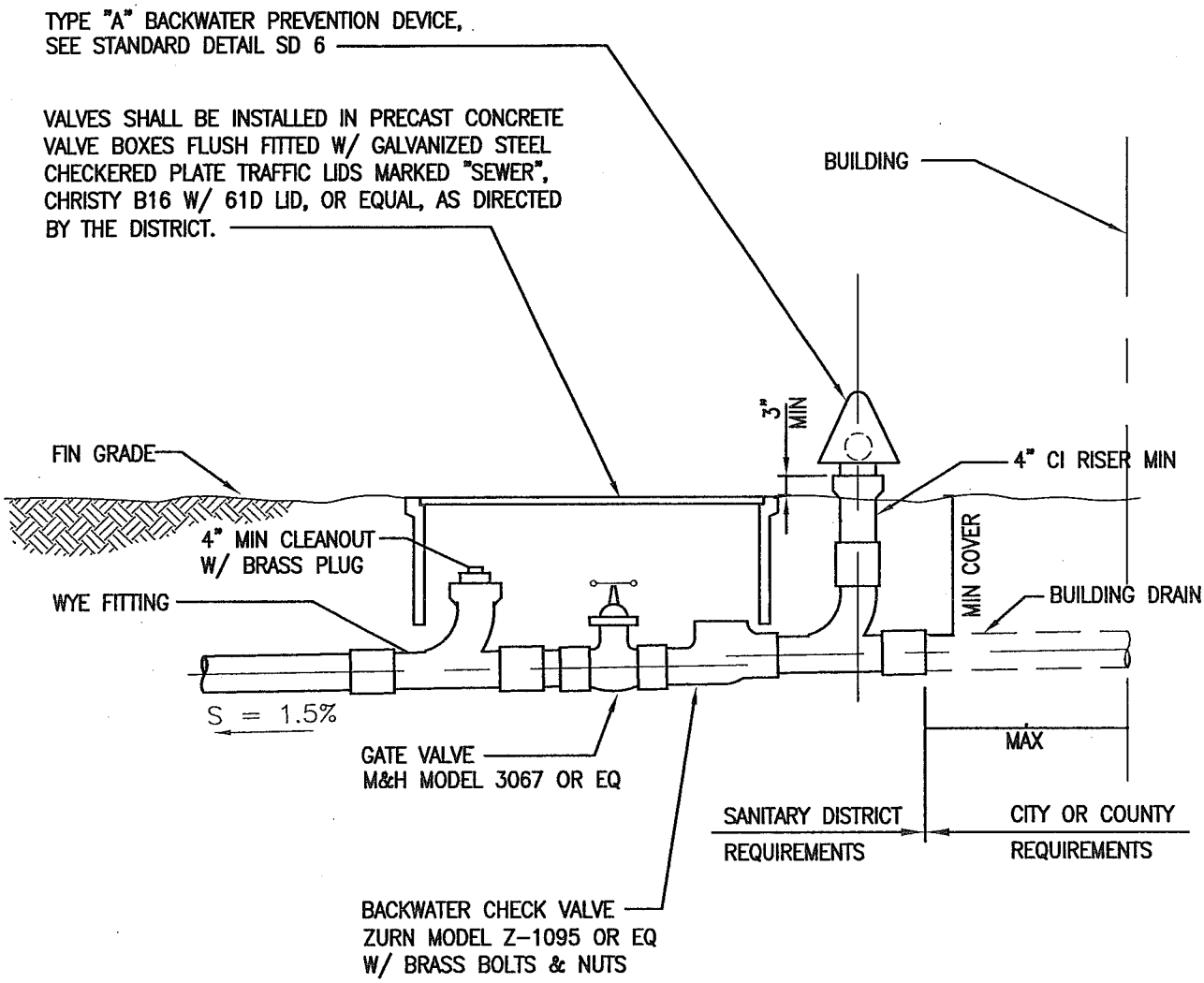

IF THE DIFFERENCE IN ELEVATION OF THE LOWEST FIXTURE AND THE TYPE "A" BACKWATER PREVENTION DEVICE IS LESS THAN SIX (6) INCHES, A BACKWATER CHECK VALVE SHALL BE INSTALLED.

MARIN COUNTY SANITARY DISTRICTS CALIFORNIA		
BACKWATER CHECK VALVE AND SHUTOFF SYSTEM		
1995		**SD 7**

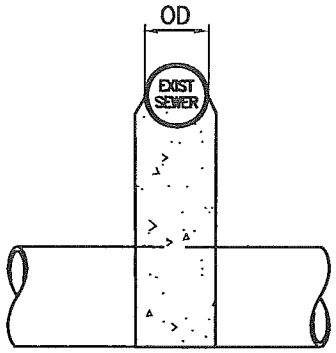

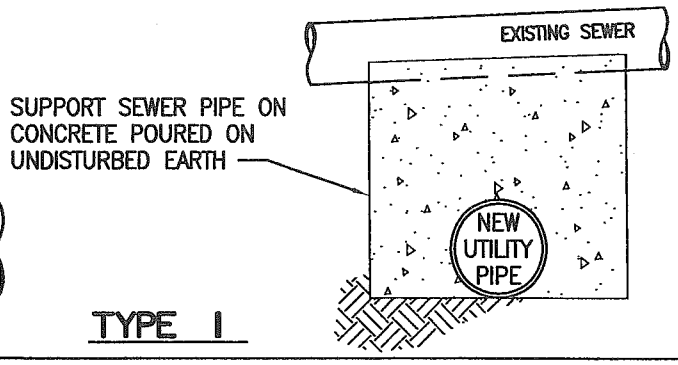

TYPE I

DIMENSIONS OF REINFORCED CONCRETE BEAM

W	DEPTH OF COVER TO SEWER			
	0' – 8'-0"		8'-0" – 16'-0"	
	D	BAR No.	D	BAR No.
4'	8"	4	8"	4
5'	8"	4	9"	5
6'	8½"	5	10½"	5
7'	9"	5	11½"	6
8'	10"	5	12½"	6
9'	11"	6	13½"	6
10'	12"	6	15"	7

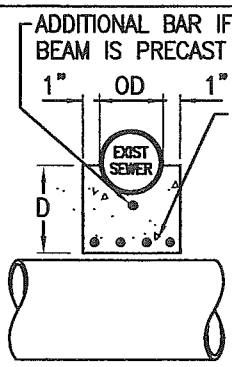

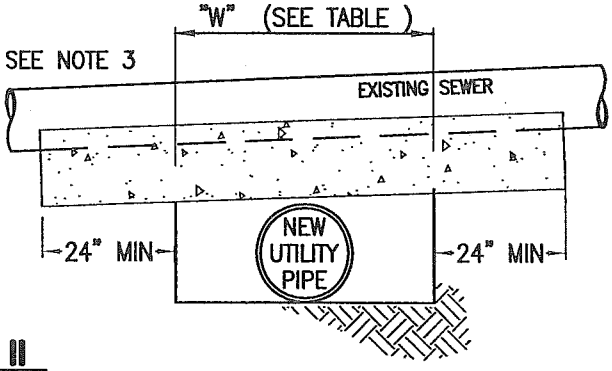

TYPE II

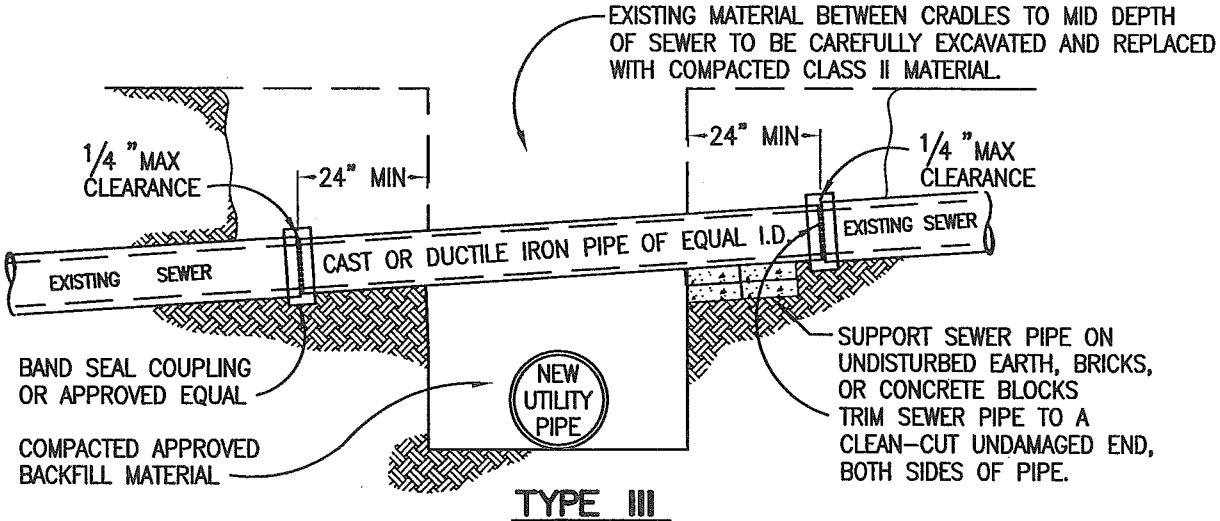

TYPE III

NOTES:

1. SEWER PROTECTION, AS DETAILED HEREON, SHALL BE PROVIDED WHEN A NEW UTILITY PIPE, IS INSTALLED BELOW AN EXISTING MAIN SEWER. TYPE I, TYPE II OR TYPE III MAY BE USED AT THE CONTRACTOR'S OPTION, UNLESS OTHERWISE SHOWN ON THE PLANS OR DIRECTED BY THE DISTRICT.
2. WHEN THE CLEARANCE BETWEEN THE PIPES IS 1" OR LESS INSTALL A 4" x 4" PAD OF 35–45 DUROMETER RUBBER SNUGLY FIT BETWEEN THE PIPES.
3. MAXIMUM SPACING OF REINFORCING STEEL TO BE 4" CENTER TO CENTER.
4. CONCRETE TO BE CLASS A (6 sack mix)
5. BACKFILL SHALL NOT BE PLACED UNTIL PIPE INSTALLATION HAS BEEN INSPECTED AND APPROVED BY THE DISTRICT.

MARIN COUNTY SANITARY DISTRICTS
CALIFORNIA

MAIN SEWER PROTECTION ABOVE UTILITY CROSSING

1995		SD 8

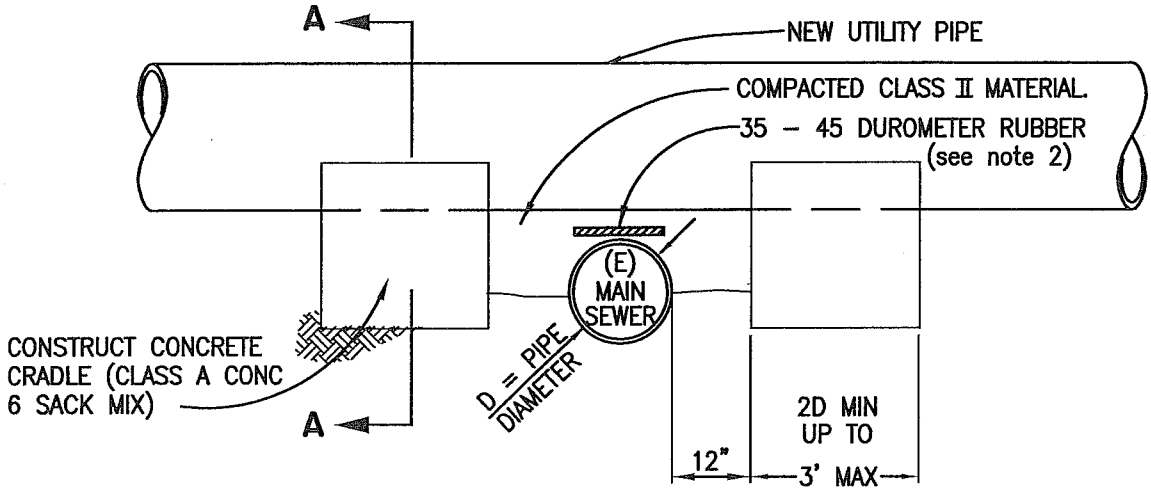

MAIN SEWER

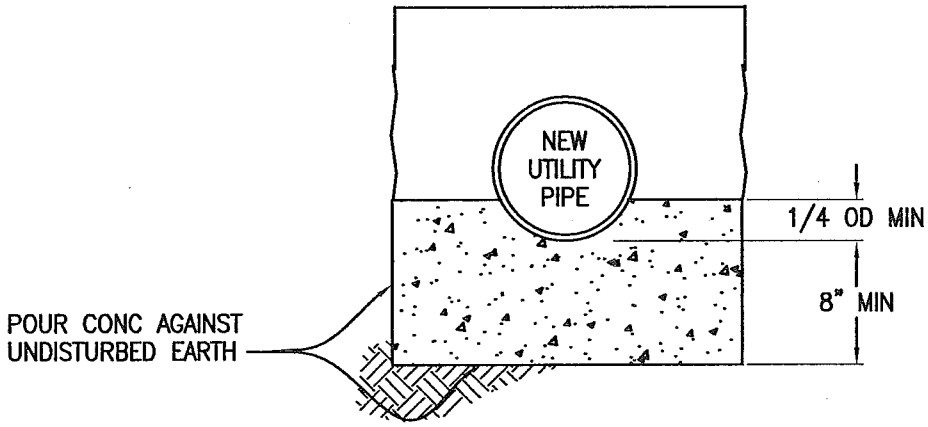

SECTION A-A

NOTES:

1. SEWER PROTECTION, AS DETAILED HEREON, SHALL BE PROVIDED WHEN A NEW UTILITY PIPE IS INSTALLED ABOVE AN EXISTING MAIN SEWER AND THE CLEARANCE IS LESS THAN 12".
2. WHEN THE CLEARANCE BETWEEN THE PIPES IS 1" OR LESS INSTALL A 4" x 4" PAD OF 35–45 DUROMETER RUBBER SNUGLY FIT BETWEEN THE PIPES.
3. EXISTING MATERIAL BETWEEN CRADLES TO MID DEPTH OF SEWER TO BE CAREFULLY EXCAVATED AND REPLACED WITH COMPACTED CLASS 2 AGGREGATE BASE.
4. BACKFILL SHALL NOT BE PLACED UNTIL PIPE INSTALLATION HAS BEEN INSPECTED AND APPROVED BY THE DISTRICT.

MARIN COUNTY SANITARY DISTRICTS CALIFORNIA		
MAIN SEWER PROTECTION BELOW UTILITY CROSSING		
1995		**SD 9**

PART F - APPENDICES

APPENDIX I – CONFINED SPACE ENTRY PROGRAM

APPENDIX II – STANDARDS FOR THE DESIGN AND CONSTRUCTION OF SEWERS IN BAY MUD

APPENDIX A

SAUSALITO-MARIN CITY SANITARY DISTRICT

STANDARDS FOR THE DESIGN AND CONSTRUCTION OF SEWERS IN BAY MUD

1) Purpose, Application, and Variances

   a) Purpose - The Sausalito-Marin City Sanitary District is responsible for the long-term operation and maintenance of the public sewers within its service area. Sewers constructed in or over bay mud can be problematic and require more stringent design and construction provisions in order to minimize the occurrence of conditions that cause sanitary sewer overflows. These provisions are also intended to mitigate the need for frequent inspection and maintenance and will assist the District in its effort to control the cost of service to its customers.

   b) Application – These design and construction standards are required for all public sewers that are constructed in or over bay mud where the thickness of the bay mud exceeds five (5) feet. The District will not allow the installation of private sewers, other than laterals, in any area where the thickness of the bay mud exceeds five (5) feet.

   c) Variances for these Standards – The District will give consideration to requests for variances from these standards; however, the developer must demonstrate compelling reasons in support the request for a variance. The reasons for the variance must include significant long term benefit to the District. The cost of construction will not be considered as a sufficient reason for granting a variance from these standards.

2) Definitions – For the purpose of this section the following additional definitions shall be used:

   a) Design Engineer – The engineer hired by the developer who is responsible for the project design and preparation of the plans, specifications and details. The Design Engineer shall be a Registered Professional Engineer in the State of California and shall be responsible for the project design and all construction staking.

   b) Project Geotechnical Engineer – The engineer hired by the developer who is responsible for evaluating the geotechnical aspects of the project, recommending appropriate design criteria related to soils and settlement, and providing geotechnical engineering oversight on the construction work. The Project Geotechnical Engineer shall be a Registered Professional Engineer and a Registered Geotechnical Engineer in the State of California.

3) Definition of Bay Mud - Property shall be considered to be underlain by bay mud if any one of the following criteria apply:

a) The District Engineer so reports, unless an approved geotechnical engineer reports in writing, together with substantiating evidence in the form of test boring logs, to the contrary; or

b) It is located less than 10 feet above mean sea level, unless an approved geotechnical engineer reports in writing, together with substantiating evidence in the form of test boring logs, to the contrary. -

4) Submittal Requirements – If a development is underlain by bay mud as defined above the applicant shall submit the following items to the District for review in addition to those items specified in the District Standard Specifications:

a) Map of the proposed development layout drawn to an appropriate scale showing existing and proposed elevation contours, the overall relationships to adjacent properties and historic physical features.

b) All geotechnical reports together with soil boring logs, settlement tests of the bay mud and a map showing the contours of the bottom of the bay mud and calculated subsidence over a 50 year period under existing conditions and for alternative heights of new fill.

c) Updated geotechnical reports which incorporate any changes in the project design since the pre-design submittal including calculations of new settlements if there has been any surcharging or wicking.

d) Plan and profiles of all sewer mains which show the as-installed profiles of the new sewers together with the predicted profiles of the sewers after 50 years of settlement. The Project Geotechnical Engineer shall stamp and sign the plans as attesting to the accuracy of the predicted profiles.

e) Details of all connections to structures and manholes.

Note: The District reserves the right to hire a third party engineer and/ or geotechnical engineer to review the developer's reports, sewer design, plan, specifications and details. The cost to the District of the third party engineer(s) shall be reimbursed by the developer.

5) Sewer System Design – The Design Engineer shall follow these principals in the design of a sewer system on land underlain by bay mud:

a) Gravity sewers shall be designed to slope toward areas of maximum predicted settlement.

b) Pump stations, if required, shall be located as close as possible to the area of maximum predicted settlement and shall not be pile supported.

c) Force mains shall be designed with uniform slope upward toward the point of discharge. The uniform grade shall be demonstrated after the predicted 50 year settlement has occurred. The force mains shall not have air release valves. They shall be designed to carry the projected peak flows together with any accumulation of air that may occur as the result of settlement.

d) The installed grade of all sewers shall be a minimum of 150% of the allowable slope per the District Standard Specifications.

e) The predicted grade of all sewer mains after 50 years shall be 150% of the allowable slope per District Standard Specifications.

f) All sewers in bay mud shall be installed on bedding consisting of a minimum of 12" of crushed rock ¾" or 1-1/2" placed over geofabric laid at the bottom of the trench and extending up each side of the trench to be wrapped over the top of the pipe zone material a minimum of 12" above the top of the pipe.

g) The depth of cover over the pipe shall not be less than 3 feet or greater than 10 feet.

h) Public sewers shall have a minimum diameter of 8 inches.

i) The clearance between the sewer and adjacent buried utilities or other underground features (e.g. sheet piling) shall be one (1) foot plus three times the predicted settlement of the sewer at that location.

j) All pressure lines connecting to a pump station structure shall exit the structure through a suitable flexible joint or ball joint.

k) Gravity sewers shall connect to pump stations or manholes through a PVC high deflection coupling located no more than one foot outside the structure.

l) The invert elevation of any sewer connecting to a pump station shall be a minimum of six (6) inches lower than the invert elevation of the nearest upstream manhole.

m) All sewer lines connecting to a pile supported structure shall connect through a flexible telescoping or rotational type of joint, which is designed to remain watertight through the predicted range of movement over 50 years of settlement between the structure and soil.

n) All sewer laterals under pile-supported structures shall not be buried but shall be positively fixed to the pile supported grade beams so they will remain fixed with the structure.

6) Materials – The following are minimum standards for materials to be used for sewers to be installed in areas underlain by bay mud:

a) All sewer pipe material for both gravity and pressure sewers shall be PVC AWWA - 900 or C-905 DR=18.

b) Lateral sewers shall be PVC Schedule 40 with solvent-welded joints.

c) Geofabric shall be Mirafi 700 or approved equal.

d) All metal to be buried underground shall be Type 316L stainless steel.

7) Construction Methods – The following special construction methods shall be employed for sewer systems being installed in bay mud.

a) Sewers shall only be installed after all new fill has been placed and contoured to final subgrade.

b) Sewers shall not be installed during the months of December, January, February or March unless specifically authorized by the District Engineer. Sewers shall not be installed during or within three days following daily rainfall of greater than 0.5 inches

c) Trenches shall be dug in the bay mud and shored in a manner to minimize any destabilization of the trench bottom.

d) If, in the opinion of the District Engineer or the Project Geotechnical Engineer, the trench bottom has been disturbed or is not stable all trenching and/or pipelaying stall immediately cease and the Project Geotechnical Engineer shall propose to the District for favorable review a method of trench stabilization. Under no circumstances shall rock larger in size than "approved bedding rock" be used to stabilize the trench bottom.

e) During trench excavation all excavated materials shall either be hauled off site or stored a minimum of 50 feet away from the edge of the trench.

f) All excavations deeper than five (5) feet shall be backfilled and compacted as recommended by the geotechnical engineer.

8) Standards for Construction Inspection

a) The contractor shall notify the District each morning that it intends to work.

b) The contractor shall provide ready and safe access to the construction for the District Engineer, Inspectors or agents.

c) The Project Geotechnical Engineer shall inspect the construction at least weekly and shall furnish the District with a brief written opinion concerning compliance with the Project Geotechnical Engineer's recommended method of construction. The written opinion shall be faxed to the District by close of work on the day of the inspection.

d) The Project Geotechnical Engineer shall inspect the construction and shall make recommendations regarding mitigation measures immediately following these events:
   i. Rainfall greater than 0.5 inches
   ii. Discovery of changed soil conditions
   iii. Trench wall failure
   iv. Trench bottom failure
   v. Other events that may effect the long term performance of the sewer system.

9) Performance Standards –The as built sewer system shall meet the performance standards per the District's Standard Specifications prior to acceptance in addition to the following:

a) All sewers constructed in bay mud shall be inspected using closed circuit television. The contractor shall clean and ball the sewer prior to calling for the inspection A sewer line is unacceptable and shall be re-laid if it is found to have a sag greater than 0.1 feet deep for a distance of ten (10) feet or longer or a sag greater than 0.15 feet for any distance.

b) A sewer line is unacceptable and shall be re-laid if it shows greater than three (3) percent deflection over the actual internal diameter of the pipe.

c) A manhole is unacceptable and shall be reconstructed if it fails to pass a vacuum test.

d) A manhole is unacceptable and shall be reconstructed if the invert varies from the design sewer grade more than 0.1 feet.

e) A pump station/force main is unacceptable if it fails to pump its rated capacity using fresh water. The flow rate shall be measured using the rate of draw down of the wet well.

10) Warranty – The developer shall warranty the work to be free from defects.
The warranty should cover a period of five (5) years from the original date of acceptance by the District. The developer will provide the District with a bond during the warranty period. The amount of the bond shall be $200 per foot of sewer and force main, $5,000 per manhole, and $200,000 per pump station in 2004 dollars. The bond amounts may be revised based on the ENR construction cost index to account for inflation.