APPENDIX K:
VALHALLA/MAIN STREET BOARDWALK PRELIMINARY STRUCTURAL EVALUATION

JYASF
STRUCTURAL ENGINEERS

Dr. Alexander Kashef
770 Tamalpais Drive #408
Corte Madera, CA 94925

Revised August 8, 2014
July 24, 2014
Job No. JYA14226

Re: Valhalla/Main Street Boardwalk – Sausalito, CA
PreliminaryStructural Evaluation

Dear Dr. Kashef,

Pursuant to your request, we have performed a preliminary structural evaluation on the feasibility to reconstruct the portion of boardwalk along Main Street, from the corner of the existing Valhalla building out to the boardwalk at the waterline. More specifically, this evaluation is intended to address the effects of hydraulic forces on the boardwalk sub- and super-structure (foundation and deck) due to rising bay still water levels, wind generated wave action, and flooding.

The boardwalk is proposed to be constructed of timber and concrete construction, with a wood floor deck consisting of decking, joists and girders supported by a combination of timber columns and conventional spread foundations. See the attached elevation and proposed boardwalk cross sections (Figures 1-3).

Reference Documents

Our evaluation was performed in accordance with the following documentation:

1) Preliminary boardwalk site plan, elevation and cross sections prepared by Michael Rex Associates, date July 1, 2014 and July 15, 2014, respectively
2) Letter from Jonathon Goldman, Director of Public Works - City of Sausalito, dated June 27, 2014.
3) 2013 California Building Code (2013 CBC)
4) American Society of Civil Engineers Standard 7-10, Minimum Design Loads for Buildings and Other Structures (ASCE 7-10)
5) Coastal Engineering Analysis – Hydraulic Loads on Boardwalk, letter prepared by Noble Consultants, dated July 17, 2014.
6) Geotechnical Investigation prepared by Nersi Hemati, dated February 6, 2012.
7) FEMA P-55, Coastal Construction Manual (FEMA P-55)

Structural Loading

Our evaluation investigated the effects of combinations of the following forces on the proposed boardwalk, in accordance with the 2013 CBC and ASCE 7-10:

<u>Vertical Loading</u>

1) Dead loads - self weight of the boardwalk construction.
2) Live loads - loading due to pedestrian foot traffic along the boardwalk.

3) Hydraulic/Flood loads - uplift due to the buoyancy of the boardwalk structure when submerged, as well as vertical impact from wave forces.

Lateral Loading

1) Wind Loads - wind forces pushing on the projected faces of the boardwalk structure.
2) Earthquake Loads - shaking of the structure due to local seismicity.
3) Hydraulic/Flood loads – wind generated wave forces causing impact and drag on the projected faces of the boardwalk structure.

We have chosen to evaluate the portions of the boardwalk to be reconstructed nearest to the waterline (P1). This part of the structure, due to its height in relation to the ground level, water level and maximum wave height will experience the highest wind, earthquake and hydraulic forces.

Refer to Appendix A for detailed calculations.

Summary and Recommendations

Based on our evaluation, the proposed construction of the boardwalk deck with the bottom of the main framing members at the elevation of 10' NAVD88 datum is suitable to resist dead, live, wind, earthquake and hydraulic loads from flooding and wave action. The construction, typical of similar boardwalks, provides for a relatively open structure allowing water to flow through it in the event of high water due to flooding or extreme storm/tidal events. This is consistent with the recommendations contained in FEMA P-55, which are intended to minimize the build-up of hydraulic forces on a structure, preventing uplift and lateral movement, thus allowing it to remain serviceable after a significant high water event.

It is important to note the following:

1) Based on our experience, the magnitude of the hydraulic loading used in the preliminary analysis is extremely low for a waterfront structure, intuitively due to the local geography and location with the San Francisco Bay.
2) With the deck at the proposed elevation, the structural design is governed by wind lateral loading in the transverse direction (north/south) and wind *plus* hydraulic lateral loading in the longitudinal direction (east/west). As you move west away from the water line, the structure is solely governed by wind or earthquake lateral loading, as hydraulic lateral loading decreases to zero (P5 through P9).
3) If the deck structure is higher than proposed, the effects from wind and earthquake loading will be amplified, and the effects of hydraulic loading will become negligible.

4) If the deck structure is lower than proposed, wind and earthquake lateral loads will remain relatively the same, as they are largely a function of the projected area and weight (respectively) of the handrail/deck. Hydraulic uplift would be anticipated to increase, but likely not enough to pose an issue, as currently the structure has a factor of safety against uplift of over 15. This factor of safety increases significantly as you move west away from the water line (P5 through P9). Hydraulic lateral drag would marginally increase since the piers would be getting shorter, but now much of the deck face and handrail would be subject to wave forces. However, this is also likely not to pose and issue as wind forces outweigh hydraulic lateral forces by over 75%.
5) The site soils are such that bedrock occurs at a relatively shallow depth (varying from approximately 9' to 13' from the waterline westward). This impacts how deep timber piles can be driven. If timber pilings were used, we would not recommend the deck elevation be placed any higher than currently proposed, as soils around the pilings are not capable of laterally supporting a taller structure. Since it may be desirable to have the deck at a higher level in the future we recommend the use of timber columns supported on conventional concrete spread footings (see Figure 3). This would have the added benefit to allow the columns to be replaced in the event the level of the boardwalk is raised to address the issue of rising seas.
6) FEMA P-55 supports the use of pile foundation types over spread foundations in areas prone to flooding and extreme wave events. The hydraulic analysis shows that over half of the support locations are out of the region affected by the maximum still water level or wave envelope. These support locations can feasibly supported by concrete spread footings (as shown in Figures 1 and 2). However, due to the higher construction cost associated with driven piles, and the issues discussed in (5) above, we feel that even the supports located within the areas affected by high water and waves can be adequately supported by timber columns atop spread footings, given how low the site hydraulic forces are.
7) We recommend that the deck elevation be placed as proposed, where the bottom of the boardwalk's main framing members are at the elevation of 10 feet NAVD88 datum. The proposed structure currently strikes a good balance between wind, earthquake and hydraulic lateral loads.

We appreciate the opportunity to provide you with this evaluation. Please don't hesitate to call me with any questions or comments you may have.

Best Regards,

Matthew Tropp
Principal

SE 5683

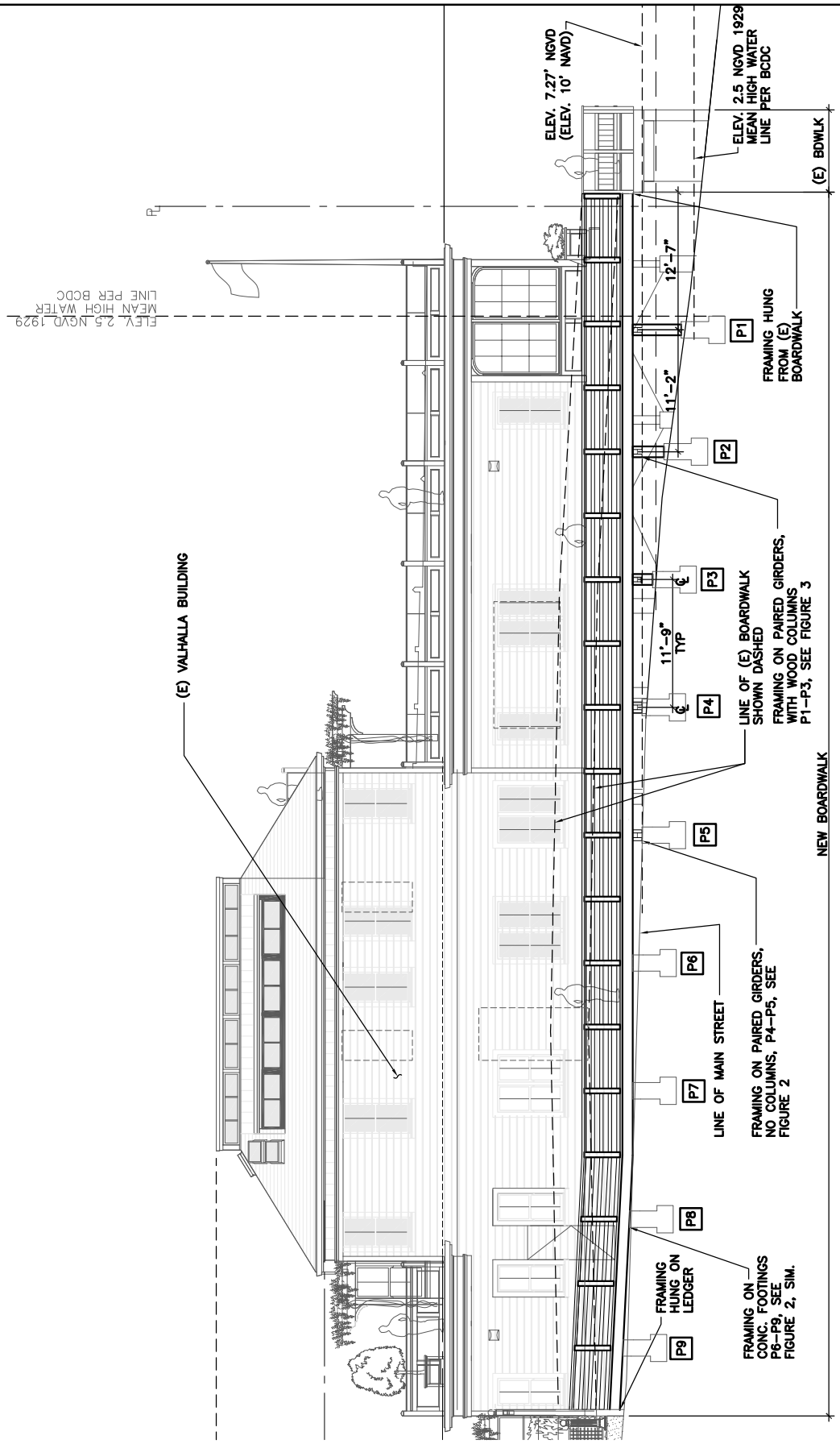

1 ELEVATION
NO SCALE

JYASF
STRUCTURAL ENGINEERS

JOHN YADEGAR & ASSOCIATES
90 NEW MONTGOMERY #412
SAN FRANCISCO, CA 94105
415.243.0858 | JYASF.COM

FIGURE 1

VALHALLA BOARDWALK
201 BRIDGE WAY/MAIN STREET, SAUSALITO, CA

DATE: 07-24-14
REV: 08-08-14

JYA 14226

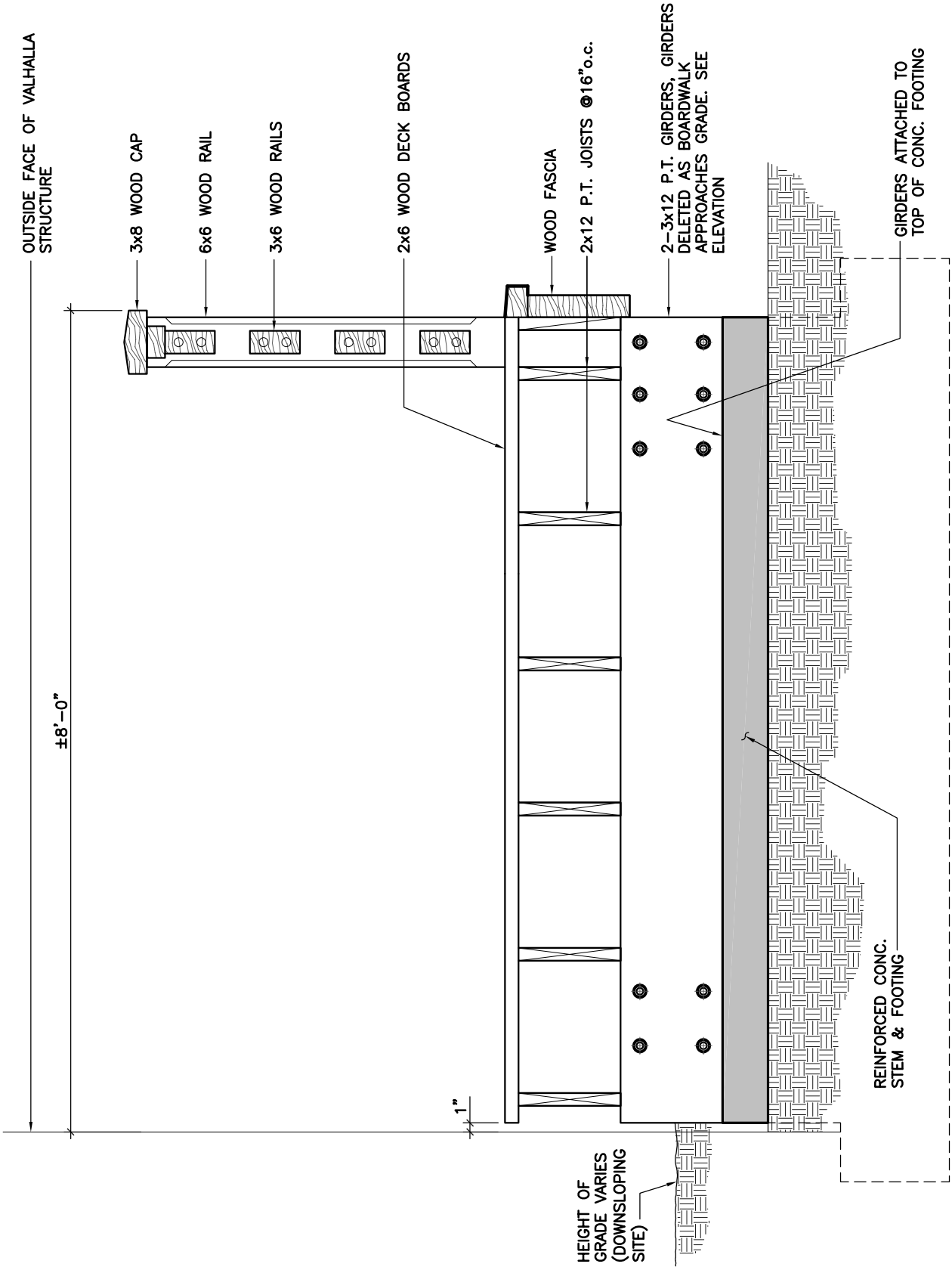

2 SECTION
NO SCALE

JYASF
STRUCTURAL ENGINEERS

JOHN YADEGAR & ASSOCIATES
90 NEW MONTGOMERY #412
SAN FRANCISCO, CA 94105
415.243.0858 | JYASF.COM

FIGURE 2

VALHALLA BOARDWALK
201 BRIDGE WAY/MAIN STREET, SAUSALITO, CA

DATE: 07-24-14
REV: 08-08-14

JYA 14226

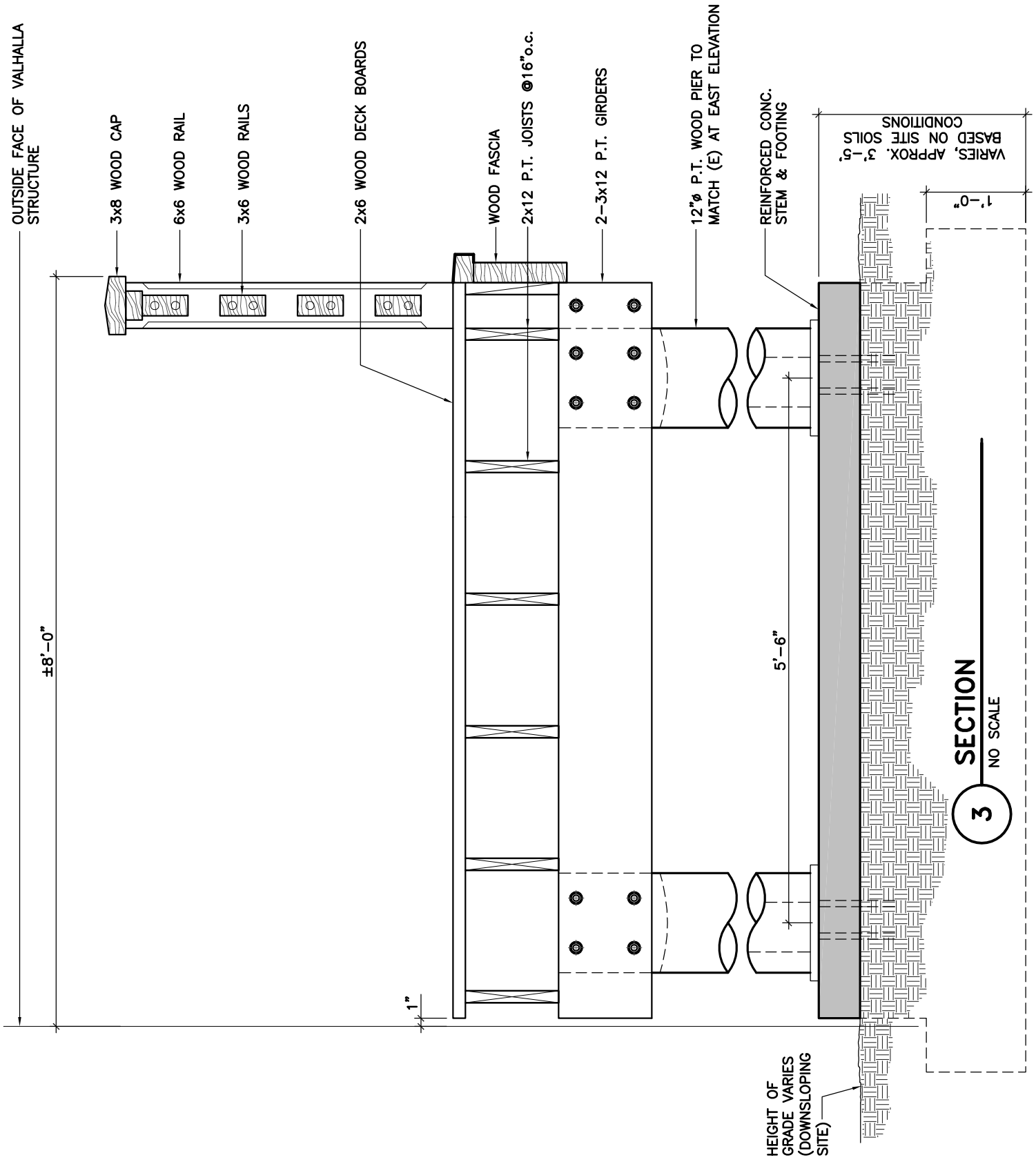

JYASF
STRUCTURAL ENGINEERS

JOHN YADEGAR & ASSOCIATES
90 NEW MONTGOMERY #412
SAN FRANCISCO, CA 94105
415.243.0858 | JYASF.COM

FIGURE 3

VALHALLA BOARDWALK
201 BRIDGE WAY/MAIN STREET, SAUSALITO, CA

DATE: 07-24-14
REV: 08-08-14

JYA 14226

JYASF
STRUCTURAL ENGINEERS
JOHN YADEGAR & ASSOC.
90 NEW MONTGOMERY #412
SAN FRANCISCO, CA 94105
T (415)243-0858
F (415)243-0486
WWW.JYASF.COM

JOB 14226 – WALTHALLA BOARDWALK
SHEET NO. APP. A-1 OF
CALCULATED BY MBT DATE 7/22/14
CHECKED BY DATE
SCALE

GOVERNING LOAD COMBINATIONS PER ASCE 7-10

ASD

(1) D
(2) D + L
(5) D + 1.5 F_a + 0.6W
(6a) D + 1.5 F_a + 0.75L + (0.75)(0.6W)
(6b) D + 0.75L + 0.75(0.7E)
(7) 0.6D + 0.6W
(8) 0.6D + 0.7E

DEAD LOADS (D)

HAND RAIL	- 6x6 @ 4' o.c.	6.5 PLF
	3x8 CAP	4.4 PLF
	4 - 3x6 RAILS	13.4 PLF
		25 PLF
DECK	- 2x6 SPACED DECKING	4.4 PSF
	2x12 @ 16" o.c.	3.1 PSF
		8 PSF
GIRDERS	- 2 - 3x12	14 PLF
PIERS	12"Ø	29 PLF

• WORST CASE AXIAL DEAD LOADING TO PIER: (11.75')(25 PLF) = 294 lb
(")(8 PSF)(8.0'/2) = 376 lb
(14 PLF)(8.0'/2) = 56 lb
(29 PLF)(5.67') = 159 lb
885 lb

LIVE LOADS (L)

100 PSF

• WORST CASE AXIAL LIVE LOADING TO PIER: (11.75')(100 PSF)(8.0'/2) = 4700 lb

JYASF
STRUCTURAL ENGINEERS
JOHN YADEGAR & ASSOC.
90 NEW MONTGOMERY #412
SAN FRANCISCO, CA 94105
T (415)243-0858
F (415)243-0486
WWW.JYASF.COM

JOB 14226 - VALHALLA BOARDWALK
SHEET NO. APP. A-2 OF
CALCULATED BY MBT DATE 7/22/14
CHECKED BY DATE
SCALE

FLOOD LOADS (F_a)

DRAG ON WORST CASE PIERS (PIER 2): 435 lb OR 218 lb PER PIER
UPLIFT ON WORST CASE PIERS (PIER 2) 417 lb OR 209 lb PER PIER

UPLIFT ON GIRDERS (PIER 2) = 114 lb OR 57 lb PER, OR 8 PLF

UPLIFT ON JOISTS (PIER 7) = 390 lb OR 56 lb PER, OR 5 PLF

WORST CASE AXIAL UPLIFT ON PIER:

209 lb
114 lb
390 lb
713 lb

SEISMIC LOADS

CANTILEVERED COLUMN SYSTEM DETAILED TO TIMBER FRAME ES $R = 1.5$

SITE CLASS D, SDC D $S_{DS} = 1.000$ $S_{D1} = 0.634$ RISK CATEGORY III (CONSERVATIVE)

$\rho = 1.0$ (BY INSPECTION) $I_e = 1.25$ $C_s = \frac{1.000}{(1.5/1.25)} = 0.833W$

WORST CASE SEISMIC LOAD TO PIER $= (0.833)(885\text{ lb}) = 738\text{ lb}$ @ 6.67'

WIND LOADS (W)

(WIND LOADS ON OTHER STRUCTURES)
WIND SPEED = 115 MPH (RISK CATEGORY 3) $K_d = 0.85$ (SIMILAR TO LATTICE FRAMEWORK)
EXPOSURE D
TRANSVERSE $K_{zt} = 1.0$ LONGITUDINAL $K_{zt} = 1.0$ $G = 0.85$ $K_z = 1.03$
($H = 907$ ft, $L_H = 2518$ ft, $x = 3494$ ft, $z = 0$, $K_1 = 0.50$, $K_2 = 0$, $K_3 = 1$)

$q_z = (0.00256)(1.03)(1.0)(0.85)(115)^2 = 29.65$ PSF

C_f PIER = 1.2 ($D\sqrt{q_z} \leq 2.5$)
C_f RAIL/DECK = 1.6 (FLAT SIDED)

$A_{TOT} = 120\text{ ft}^2$
$A_{OVLP} = 39.7\text{ ft}^2$ (FLAT)
$\varepsilon_{FLAT} = 0.331$
$\varepsilon_{ROUND} \leq 0.6$

JYASF
STRUCTURAL ENGINEERS
JOHN YADEGAR & ASSOC.
90 NEW MONTGOMERY #412
SAN FRANCISCO, CA 94105
T (415)243-0858
F (415)243-0486
WWW.JYASF.COM

JOB 14226 - VALHALLA BOARDWALK
SHEET NO. APP A-3 OF
CALCULATED BY MBT DATE 7/22/14
CHECKED BY DATE
SCALE

WIND LOADS (W) CONT'D

WORST CASE WIND LOADS (TRANSVERSE), APPLIED @ CTR OF HAND RAIL AREA:

$$W = \left[(39.7\,ft^2)(29.65\,psf)(1.6) + (5.67\,ft^2)(29.65\,psf)(1.2)\right](0.85) = 1773\,lb \text{ @ } 8.49'$$

WORST CASE WIND LOADS (LONGITUDINAL), APPLIED @ TOP OF DECK:

$$W = \left[(19.27)(29.65)(1.8) + 2(5.67)(29.65)(1.2)\right](0.85) = 1219\,lb \text{ @ } 5.59'$$

JYASF
JOHN YADEGAR & ASSOC.
STRUCTURAL ENGINEERS
90 NEW MONTGOMERY #412
SAN FRANCISCO, CA 94105
T (415)243-0858
F (415)243-0486
WWW.JYASF.COM

JOB 14226 - VALHALLA BOARDWALK
SHEET NO. APP A-4 OF
CALCULATED BY MBT DATE 7/22/14
CHECKED BY DATE
SCALE

PIER EMBEDMENT

AXIAL LOADS

(A) DOWNWARD - BY INSPECTION (2) D+L LOAD GOVERNS

$P = 885 + 4700 = 5585$ lb

12" Ø PIER, C = 3.1416 ft CAPACITY / FT = (3.1416)(400 PSF) = 1257 lb

MIN EMBED = 5585 lb / 1257 lb/ft = 4.45' BELOW 5' → USE 10' PIERS

(B) UPWARD - (5) $D + 1.5F_a + \cancel{0.6W}^{0}$ = 885 - 1.5(713) = -185 lb

USE 1/2 DOWNWARD CAPACITY, MIN EMBED = 185/(1257/2) = 0.3'

DOWNWARD LOADING GOVERNS AXIAL EMBED!

LATERAL LOADS

LATERAL LOADS SPLIT BETWEEN 2 PIERS: WIND (TRANSVERSE/LONGITUDINAL) SEISMIC, FLOOD (LONGITUDINAL ONLY)

(A) WIND, TRANSVERSE: (7) 0.6W/2 PIERS = (0.6) 1773/2 = 532 lb @ 8.49'

(B) (5) [1.5F_a + (0.75)(0.6W)]/2 PIERS : (1.5)(210 lb) + (0.75)(0.6)(1210)/2 = 602 lb, @ 5.4'
(WIND + HYDRAULIC)

(C) (8) SEISMIC: 0.7E = (0.7)(730 lb) = 517 lb @ 6.67'

BY INSPECTION, CASE (A) WILL PRODUCE DEEPEST LATERAL EMBEDMENT

USE POLE FORMULA, UNCONSTRAINED: Ø = 12" SHAPE FACTOR = 1.0 PASSIVE 250 PSF/FT
APPLY PASSIVE ON 2Ø's w/ 1/3 TRANSIENT INCREASE
FORCE @ TOTAL HT = 5' + 8.49' = 13.49' TRY 5' EMBED, S1 = 1112, A = 1.12
MIN EMBED = 4.66' → TRIAL OK. USE: 10' TOTAL EMBED

JYASF
STRUCTURAL ENGINEERS
JOHN YADEGAR & ASSOC.
90 NEW MONTGOMERY #412
SAN FRANCISCO, CA 94105
T (415)243-0858
F (415)243-0486
WWW.JYASF.COM

JOB 14226 - VALHALLA BOARDWALK
SHEET NO. APP A-5 OF
CALCULATED BY MBT DATE 7/22/14
CHECKED BY DATE
SCALE

SPREAD FOOTING ASSESSMENT

$M_{OT} = (0.6)(1773\text{ lb})(8.49' + 2.5') = 11692\text{ lb ft}$

$e = \frac{M_{OT}}{P_{TOT}} = \frac{11692}{0.6(2 \times 885 + 5025)} = 2.87' > e$

$P = 885\text{ lb}$ $W_F = 5025\text{ lb}$

$b/6 = 8/6 = 1.33'$

$q = \frac{2P}{3ab} = \frac{(2)(4077)}{(3)(8/2 - 2.87)(2)} = 1203\text{ PSF}$

$q \leq 3300\text{ PSF}$

(FROM SOILS REPORT)

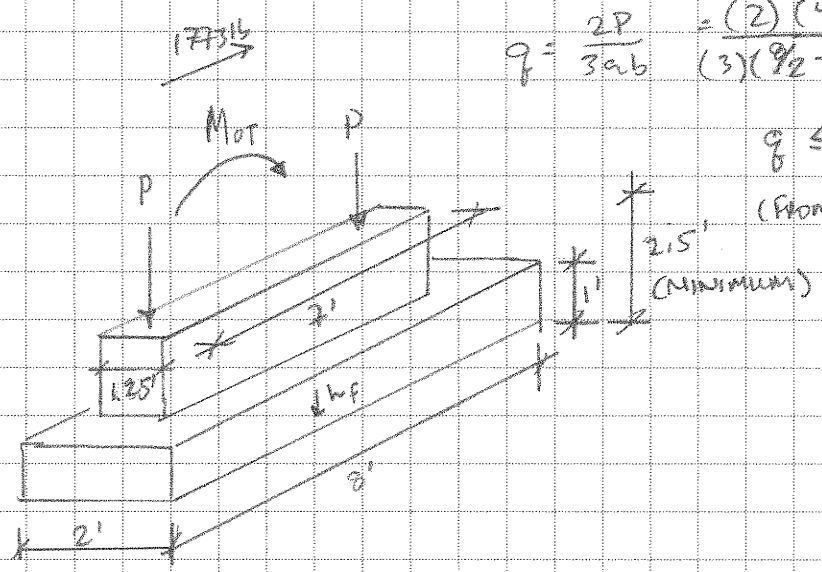

CHECK BOUANCY

UPLIFT ON COL'S = 2(185 lb) = 370 lb

370 lb − 5025 lb = −4655 lb → THEREFORE NO UPLIFT

CHECK SLIDING

$V = (0.6)(1773\text{ lb}) = 1064\text{ lb}$ USE FRICTION + PASSIVE

$F = 0.3(4077) = 1224\text{ lb}$ PASSIVE = (1.0')(250 PCF)(2.0') = 500 lb

$V_{RES} = 1224 + 500 = 1724$

$FS = 1724/1064 = 1.62$ → ok!

SPREAD FOOTING ADEQUATE FOR SUPPORT!