REV. NO.	SHEET NO.	TOTAL SHEETS
----	----	----

GOLDEN GATE BRIDGE
HIGHWAY & TRANSPORTATION DISTRICT

Golden Gate Bridge, Highway and Transportation District

SAUSALITO FERRY TERMINAL IMPROVEMENTS

CONTRACT NO. 2010-FT-3

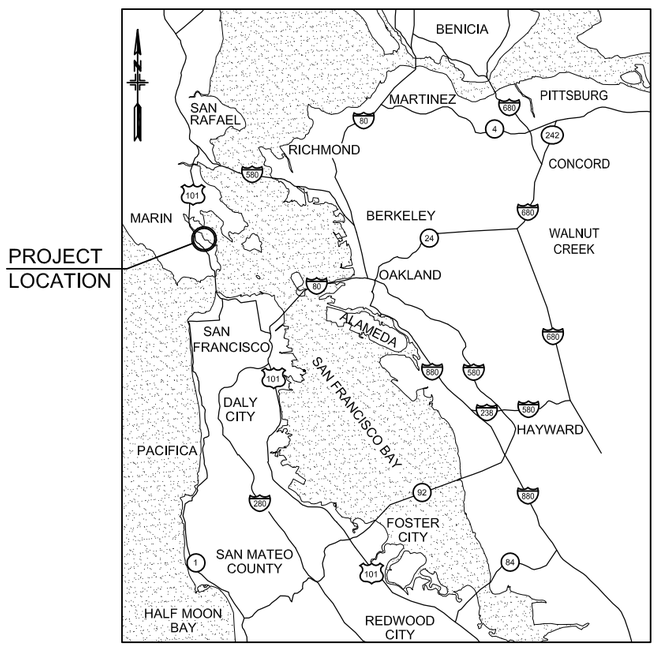

VICINITY MAP

5 0 5 10
SCALE IN MILES

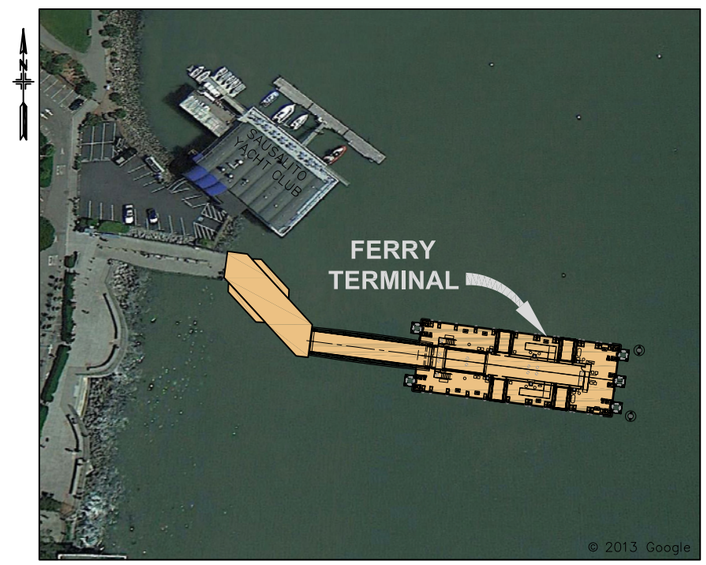

SAUSALITO FERRY TERMINAL

NO SCALE

LOCATION PLAN

NO SCALE

AGENCY SUBMITTAL
NOT FOR CONSTRUCTION
65% DESIGN SUBMITTAL

	BY	CHECKED	
DESIGN	AB	BJ	BO JENSEN, PROJECT MANAGER
DRAWN	TE		
QUANTITIES			

ORIGINAL SCALE IN INCHES FOR REDUCED PLANS 0 1 2 3

moffatt & nichol
2185 N. California Blvd., Suite 500
Walnut Creek, CA 94596

REGISTERED CIVIL ENGINEER
07/18/2014
PLANS APPROVAL DATE

NO.	REVISIONS	BY	DATE

CONTRACT NO. 2011-B-2
CADD FILE 703800_GP.1.dwg
DRAWING NO. GP.1

APPROVED BY
DISTRICT ENGINEER
DATE

PROJECT TITLE
GOLDEN GATE SAUSALITO FERRY TERMINAL IMPROVEMENTS

SHEET TITLE
TITLE SHEET

GOLDEN GATE BRIDGE
HIGHWAY & TRANSPORTATION DISTRICT

P:\7038 GGBD Ferry Terminals\500 Cadd\560 Working\SAUSALITO\CADD\703800_GP.1.dwg Jul 21, 2014 - 8:24am

REV. NO.	SHEET NO.	TOTAL SHEETS
----	----	----

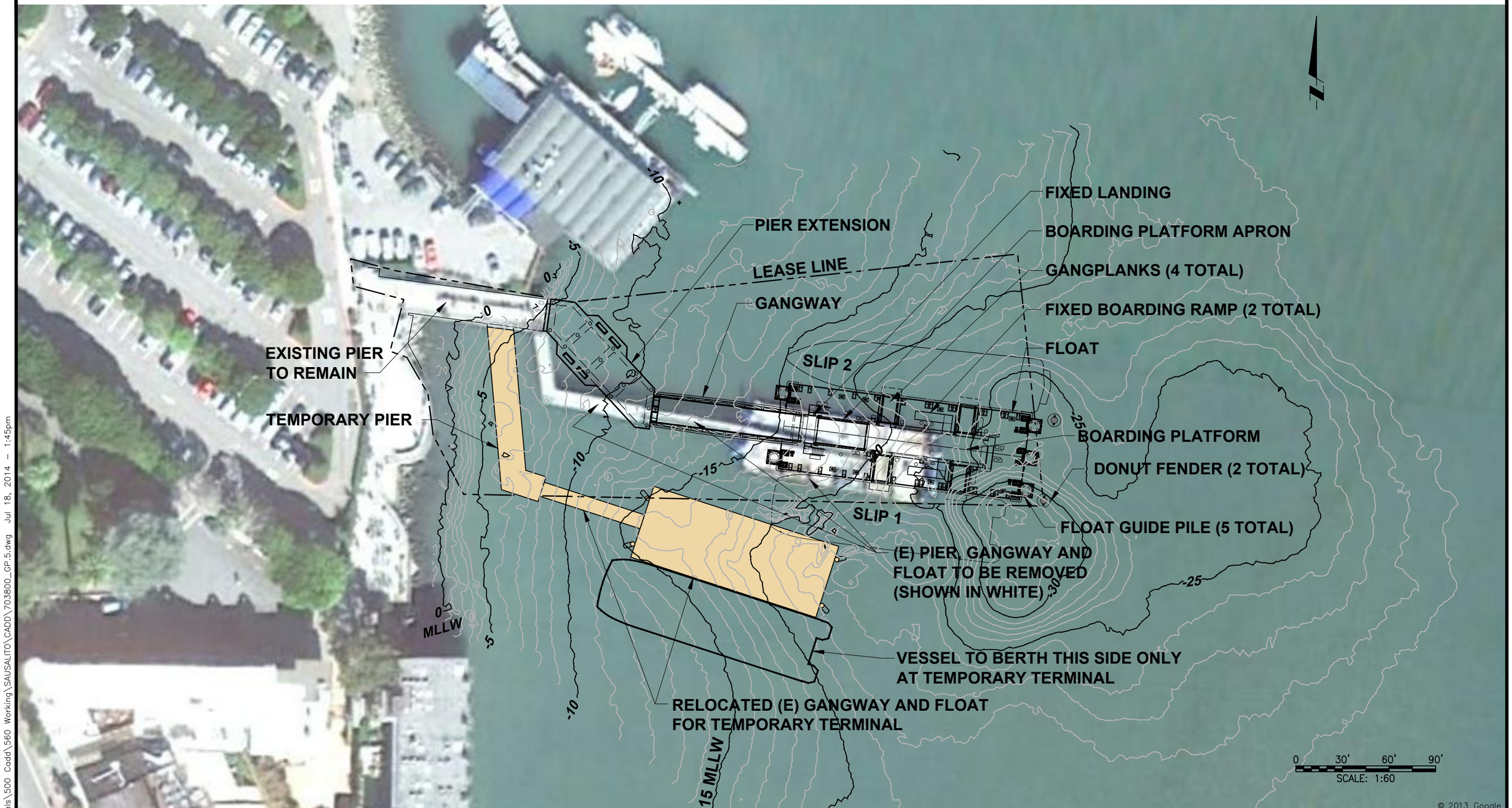

P:\7038 GGBD Ferry Terminals\500 Cadd\560 Working\SAUSALITO\CADD\703800_GP.5.dwg Jul 18, 2014 – 1:45pm

DESIGN	BY AB	CHECKED BJ	BO JENSEN PROJECT MANAGER
DRAWN	BY TE	CHECKED	
QUANTITIES	BY	CHECKED	

ORIGINAL SCALE IN INCHES FOR REDUCED PLANS 0 1 2 3

moffatt & nichol
2185 N. California Blvd., Suite 500
Walnut Creek, CA 94596

REGISTERED CIVIL ENGINEER
07/18/2014
PLANS APPROVAL DATE

NO.	REVISIONS	BY	DATE

CONTRACT NO. 2011–B–2
CADD FILE 703800_GP.5.dwg
DRAWING NO. GP.5

APPROVED BY
DISTRICT ENGINEER
DATE

PROJECT TITLE
GOLDEN GATE SAUSALITO FERRY TERMINAL IMPROVEMENTS

SHEET TITLE
SITE LAYOUT PLAN

GOLDEN GATE BRIDGE HIGHWAY & TRANSPORTATION DISTRICT

REV. NO.	SHEET NO.	TOTAL SHEETS
----	----	----

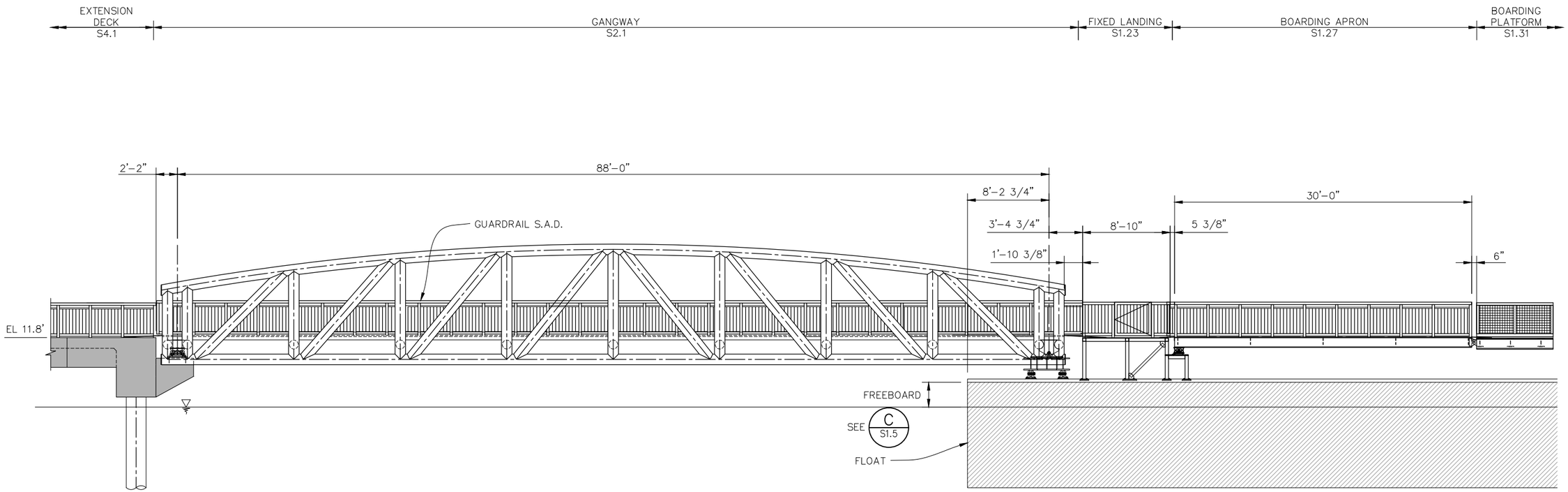

ELEVATION – LEVEL

SCALE: 3/16" = 1'-0"

NOTES:

1. ALL ELEVATIONS ARE REFERENCED TO MLLW.

8'-0" 0'-0" 4'-0" 8'-0"

SCALE: 3/16"=1'-0"

DESIGN	BY AB	CHECKED BJ	BO JENSEN PROJECT MANAGER
DRAWN	BY TE	CHECKED	
QUANTITIES	BY	CHECKED	

ORIGINAL SCALE IN INCHES FOR REDUCED PLANS 0 1 2 3

moffatt & nichol
2185 N. California Blvd., Suite 500
Walnut Creek, CA 94596

REGISTERED CIVIL ENGINEER
07/18/2014
PLANS APPROVAL DATE

NO.	REVISIONS	BY	DATE

CONTRACT NO. 2011-B-2
CADD FILE 703800_GP.8.dwg
DRAWING NO. GP.8

APPROVED BY
DISTRICT ENGINEER
DATE

PROJECT TITLE
GOLDEN GATE SAUSALITO FERRY TERMINAL IMPROVEMENTS

SHEET TITLE
GANGWAY, FIXED LANDING & BOARDING APRON – LEVEL

GOLDEN GATE BRIDGE HIGHWAY & TRANSPORTATION DISTRICT

P:\7038 GGBD Ferry Terminals\500 Cadd\560 Working\SAUSALITO\CADD\703800_GP.8.dwg Jul 18, 2014 – 1:45pm

REV. NO.	SHEET NO.	TOTAL SHEETS
----	----	----

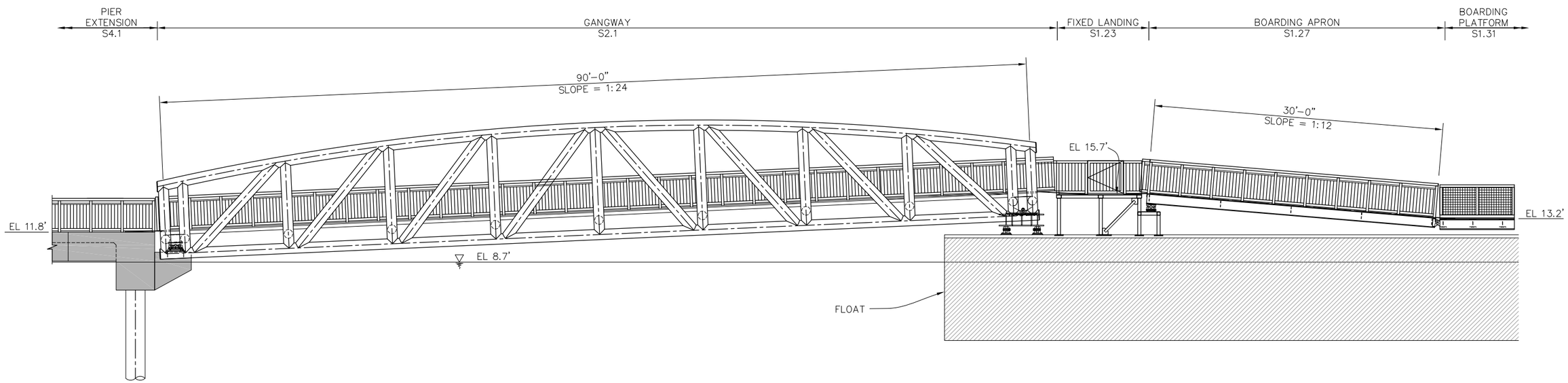

HIGH WATER – VESSEL WITH LOW DOOR FREEBOARD

SCALE: 3/16" = 1'-0"

NOTES:

1. THIS CONDITION ILLUSTRATES MINIMUM LEVEL SURFACE BETWEEN GANGWAY TRANSITION PLATE AND APRON TRANSITION PLATE.
2. ALL ELEVATIONS ARE REFERENCED TO MLLW.

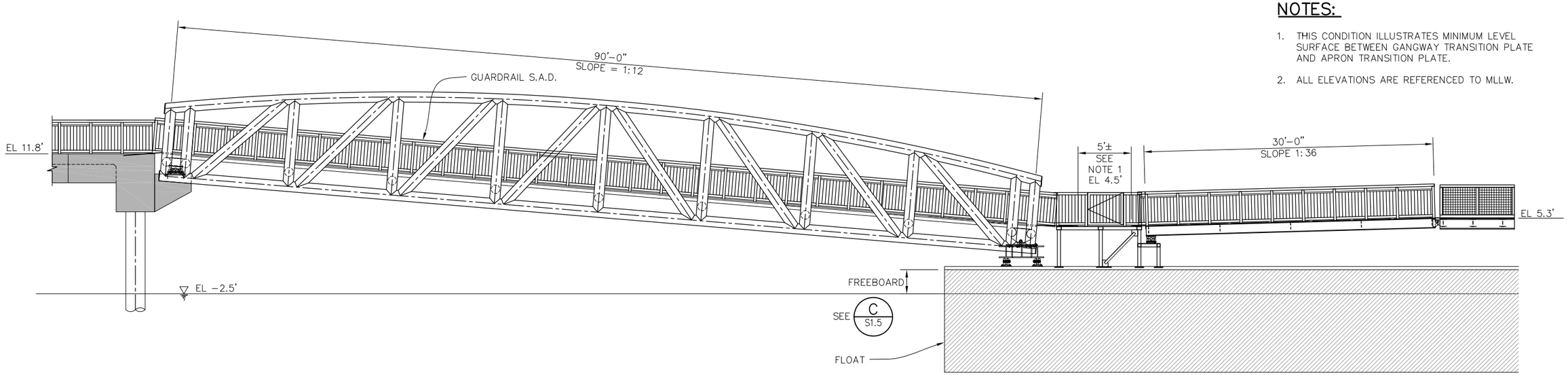

LOW WATER – VESSEL WITH HIGH DOOR FREEBOARD

SCALE: 3/16" = 1'-0"

8'-0" 0'-0" 4'-0" 8'-0"
SCALE: 3/16"=1'-0"

DESIGN	BY AB	CHECKED BJ	BO JENSEN PROJECT MANAGER
DRAWN	BY TE	CHECKED	
QUANTITIES	BY	CHECKED	

ORIGINAL SCALE IN INCHES FOR REDUCED PLANS 0 1 2 3

moffatt & nichol
2185 N. California Blvd., Suite 500
Walnut Creek, CA 94596

REGISTERED CIVIL ENGINEER
07/18/2014
PLANS APPROVAL DATE

NO.	REVISIONS	BY	DATE

CONTRACT NO. 2011-B-2
CADD FILE 703800_GP.9.dwg
DRAWING NO. GP.9

APPROVED BY
DISTRICT ENGINEER
DATE

PROJECT TITLE
GOLDEN GATE SAUSALITO FERRY TERMINAL IMPROVEMENTS

SHEET TITLE
GANGWAY, FIXED LANDING & BOARDING APRON – SLOPES

GOLDEN GATE BRIDGE HIGHWAY & TRANSPORTATION DISTRICT

P:\7038 GGBD Ferry Terminals\500 Cadd\560 Working\SAUSALITO\CADD\703800_GP.9.dwg Jul 21, 2014 – 8:38am

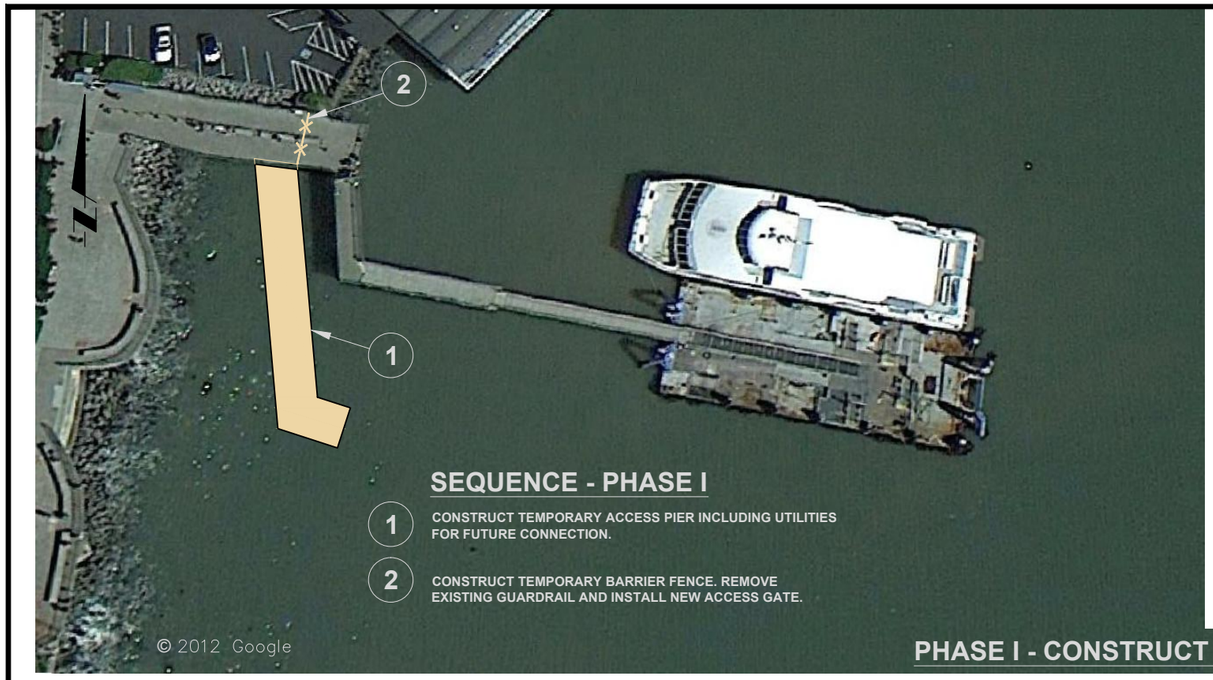

SEQUENCE - PHASE I

1. CONSTRUCT TEMPORARY ACCESS PIER INCLUDING UTILITIES FOR FUTURE CONNECTION.
2. CONSTRUCT TEMPORARY BARRIER FENCE. REMOVE EXISTING GUARDRAIL AND INSTALL NEW ACCESS GATE.

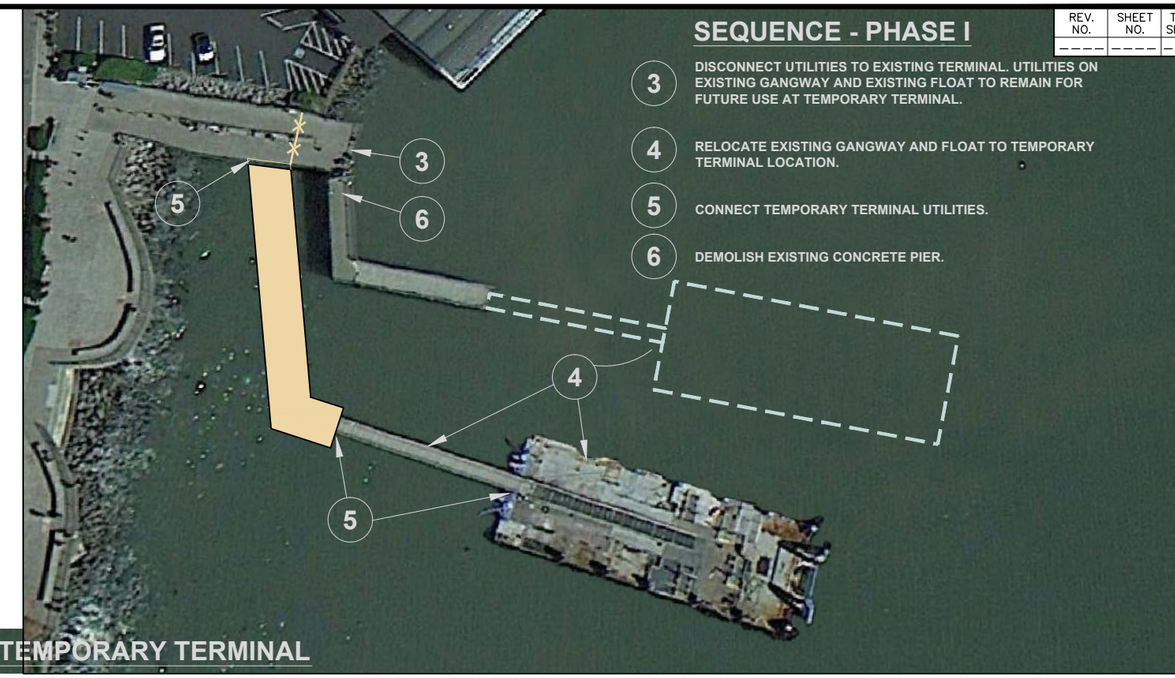

SEQUENCE - PHASE I

3. DISCONNECT UTILITIES TO EXISTING TERMINAL. UTILITIES ON EXISTING GANGWAY AND EXISTING FLOAT TO REMAIN FOR FUTURE USE AT TEMPORARY TERMINAL.
4. RELOCATE EXISTING GANGWAY AND FLOAT TO TEMPORARY TERMINAL LOCATION.
5. CONNECT TEMPORARY TERMINAL UTILITIES.
6. DEMOLISH EXISTING CONCRETE PIER.

PHASE I - CONSTRUCT TEMPORARY TERMINAL

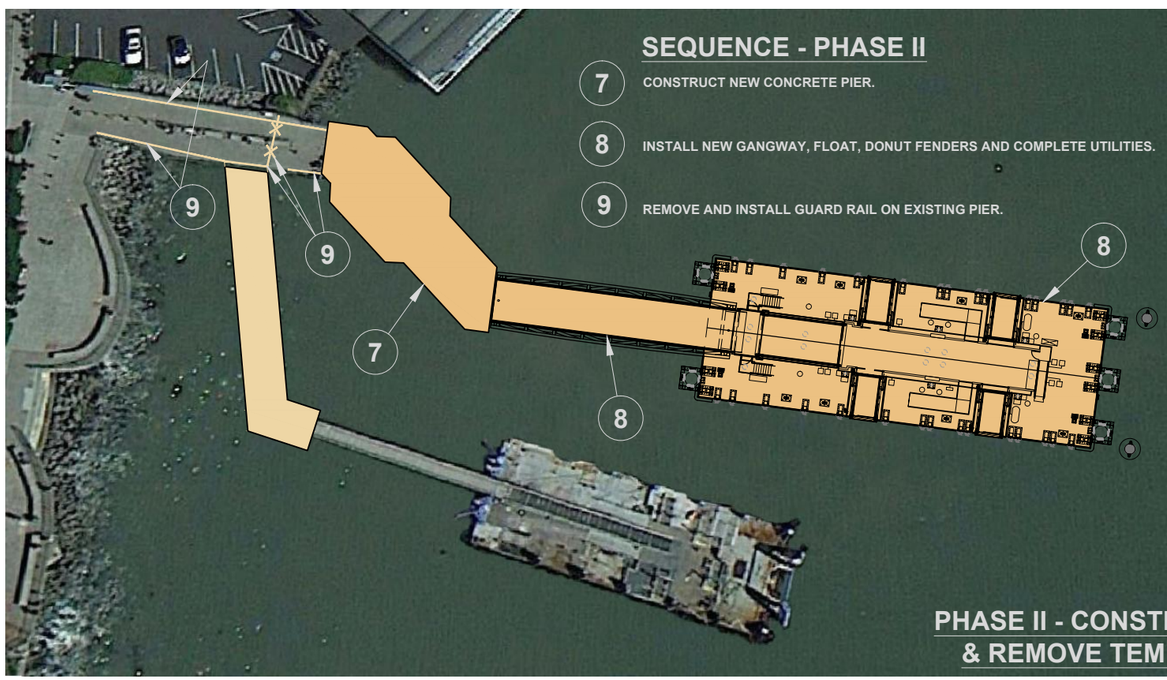

SEQUENCE - PHASE II

7. CONSTRUCT NEW CONCRETE PIER.
8. INSTALL NEW GANGWAY, FLOAT, DONUT FENDERS AND COMPLETE UTILITIES.
9. REMOVE AND INSTALL GUARD RAIL ON EXISTING PIER.

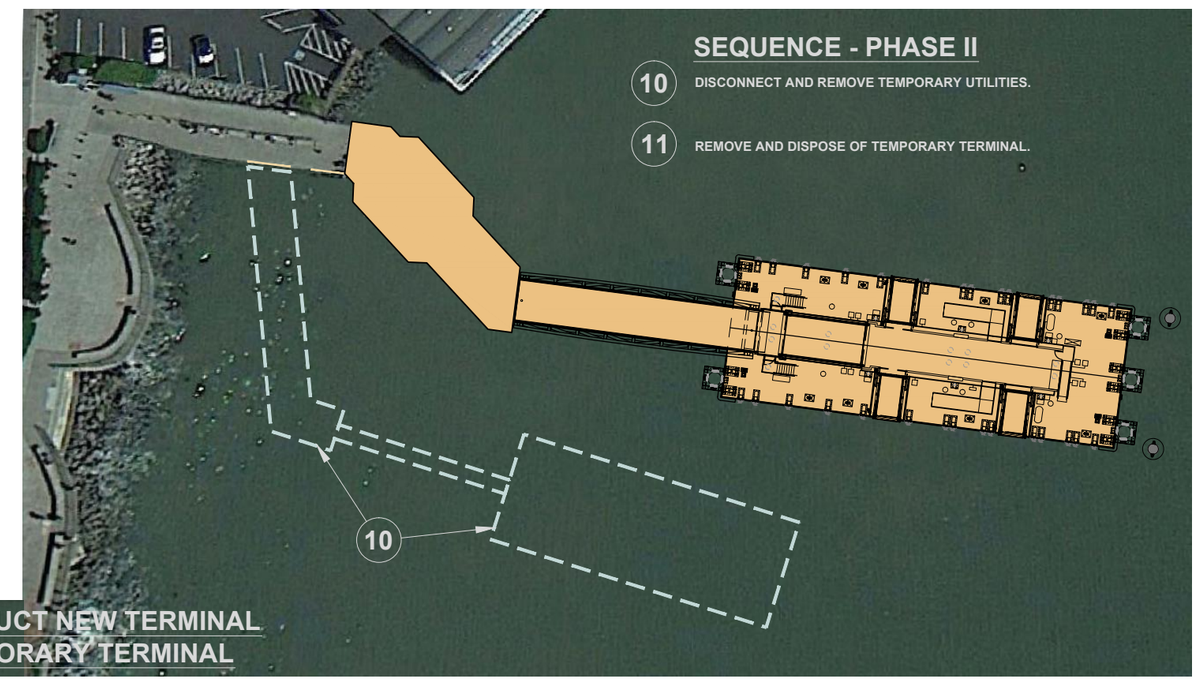

SEQUENCE - PHASE II

10. DISCONNECT AND REMOVE TEMPORARY UTILITIES.
11. REMOVE AND DISPOSE OF TEMPORARY TERMINAL.

PHASE II - CONSTRUCT NEW TERMINAL & REMOVE TEMPORARY TERMINAL

REV. NO.	SHEET NO.	TOTAL SHEETS
----	----	----

0 30' 60' 90'
SCALE: 1:60

DESIGN	BY MJW	CHECKED BJ	BO JENSEN PROJECT MANAGER
DRAWN	BY TE	CHECKED	
QUANTITIES	BY	CHECKED	

ORIGINAL SCALE IN INCHES FOR REDUCED PLANS 0 1 2 3

moffatt & nichol
2185 N. California Blvd., Suite 500
Walnut Creek, CA 94596

REGISTERED CIVIL ENGINEER
07/18/2014
PLANS APPROVAL DATE

NO.	REVISIONS	BY	DATE

CONTRACT NO. 2011-B-2
CADD FILE 703800_CS.1.dwg
DRAWING NO. CS.1

APPROVED BY
DISTRICT ENGINEER
DATE

PROJECT TITLE
GOLDEN GATE SAUSALITO FERRY TERMINAL IMPROVEMENTS

SHEET TITLE
STAGE CONSTRUCTION

GOLDEN GATE BRIDGE HIGHWAY & TRANSPORTATION DISTRICT

P:\7038 GGBD Ferry Terminals\500 Cadd\560 Working\SAUSALITO\CADD\703800_CS.1.dwg Jul 18, 2014 - 1:45pm

REV. NO.	SHEET NO.	TOTAL SHEETS
----	----	----

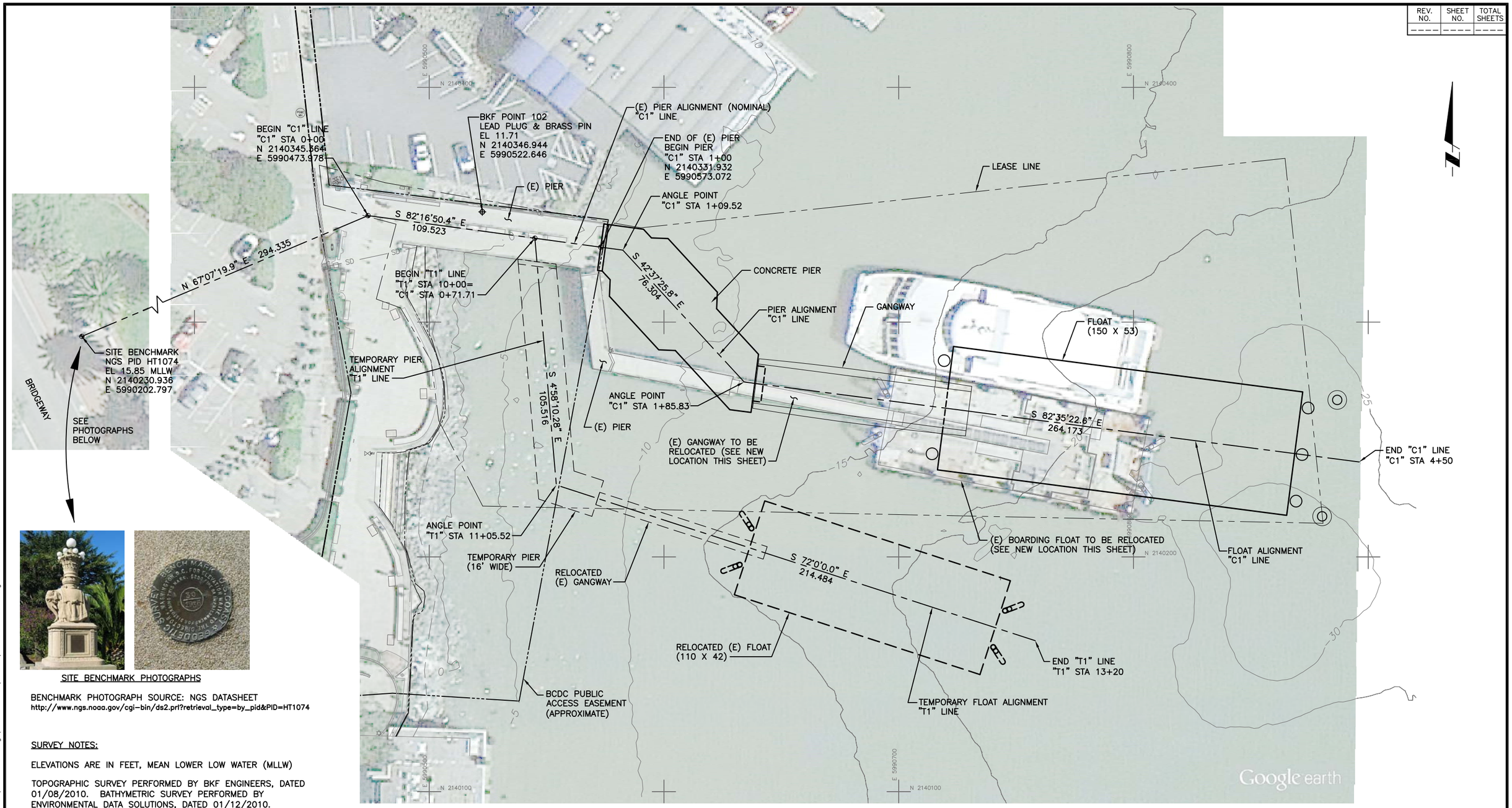

SITE BENCHMARK PHOTOGRAPHS

BENCHMARK PHOTOGRAPH SOURCE: NGS DATASHEET
http://www.ngs.noaa.gov/cgi-bin/ds2.prl?retrieval_type=by_pid&PID=HT1074

SURVEY NOTES:

ELEVATIONS ARE IN FEET, MEAN LOWER LOW WATER (MLLW)

TOPOGRAPHIC SURVEY PERFORMED BY BKF ENGINEERS, DATED 01/08/2010. BATHYMETRIC SURVEY PERFORMED BY ENVIRONMENTAL DATA SOLUTIONS, DATED 01/12/2010.

BASIS OF BEARINGS: THE BASIS OF BEARINGS AND COORDINATES FOR THIS SURVEY WERE BASED UPON NAD83, CALIFORNIA COORDINATE SYSTEM OF 1983, EPOCH 2007.

BENCHMARK: FOUND DISK STAMPED "30 1936" HAVING THE NGS PID HT1074 & NOAA VM #8414, PER TIDAL BENCHMARK REPORT #9414806, AND AN ELEVATION ABOVE MEAN LOWER LOW WATER IN US SURVEY FEET OF 15.85'.

0 20' 40 60
SCALE: 1:20

NOTE: AERIAL PHOTOGRAPH SOURCE: GOOGLE EARTH, DATED 5-6-2012

DESIGN	BY NN	CHECKED BJ	BO JENSEN PROJECT MANAGER
DRAWN	BY NN	CHECKED	
QUANTITIES	BY	CHECKED	

ORIGINAL SCALE IN INCHES FOR REDUCED PLANS 0 1 2 3

moffatt & nichol
2185 N. California Blvd., Suite 500
Walnut Creek, CA 94596

REGISTERED CIVIL ENGINEER
07/18/2014
PLANS APPROVAL DATE

NO.	REVISIONS	BY	DATE

CONTRACT NO. 2011-B-2
CADD FILE 703800_C.1.dwg
DRAWING NO. C.1

APPROVED BY
DISTRICT ENGINEER
DATE

PROJECT TITLE
GOLDEN GATE SAUSALITO FERRY TERMINAL IMPROVEMENTS

SHEET TITLE
SITE CONTROL PLAN

GOLDEN GATE BRIDGE HIGHWAY & TRANSPORTATION DISTRICT

P:\7038 GGBD Ferry Terminals\500 Cadd\560 Working\SAUSALITO\CADD\703800_C.1.dwg Jul 21, 2014 - 8:40am

REV. NO.	SHEET NO.	TOTAL SHEETS
----	----	----

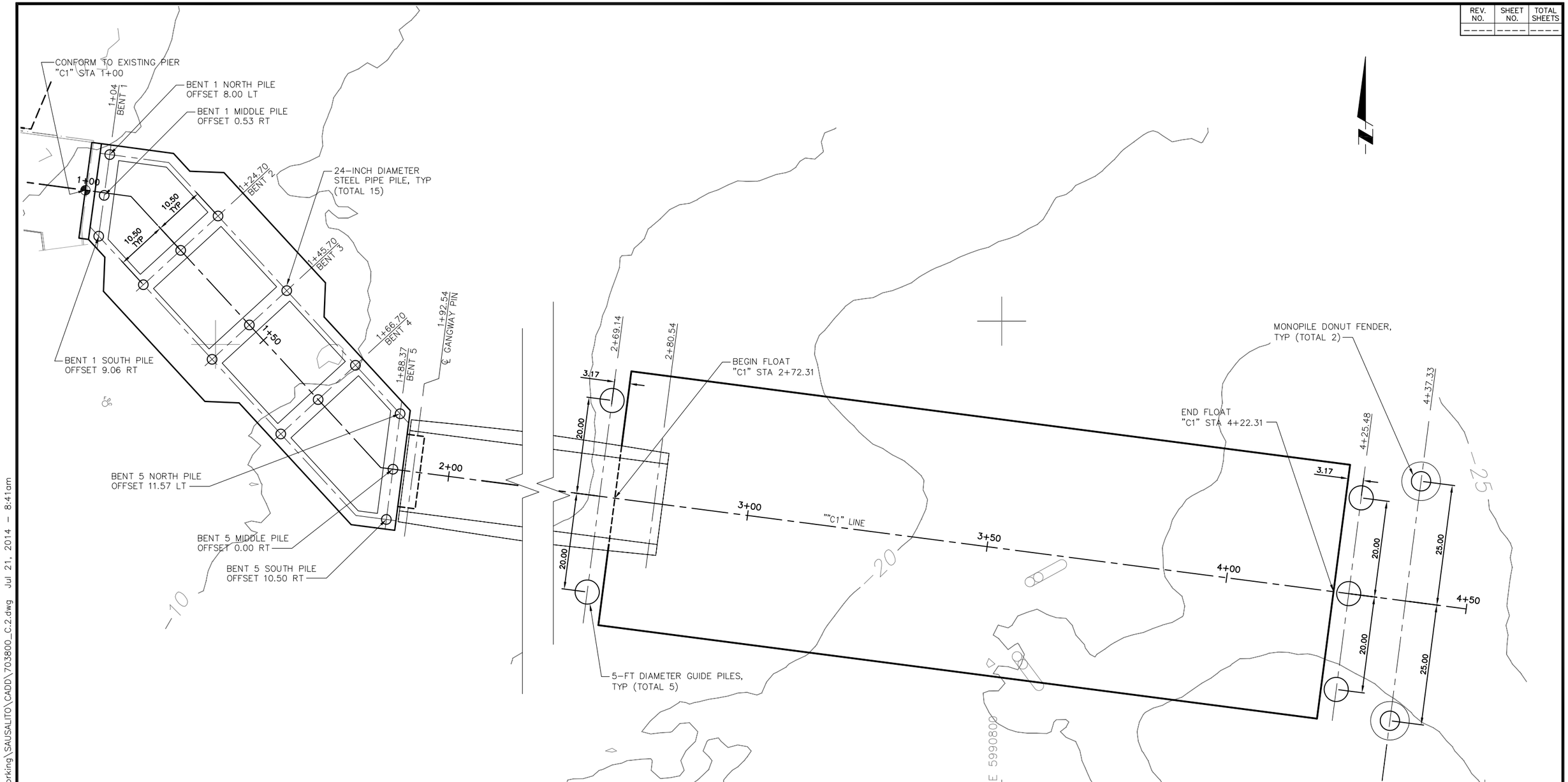

10' 0' 10' 20'

SCALE: 1"=10'-0"

DESIGN	BY NN	CHECKED BJ	BO JENSEN PROJECT MANAGER
DRAWN	BY NN	CHECKED	
QUANTITIES	BY	CHECKED	

ORIGINAL SCALE IN INCHES FOR REDUCED PLANS 0 1 2 3

moffatt & nichol
2185 N. California Blvd., Suite 500
Walnut Creek, CA 94596

REGISTERED CIVIL ENGINEER
07/18/2014
PLANS APPROVAL DATE

NO.	REVISIONS	BY	DATE

CONTRACT NO. 2011-B-2
CADD FILE 703800_C.2.dwg
DRAWING NO. C.2

APPROVED BY
DISTRICT ENGINEER
DATE

PROJECT TITLE
GOLDEN GATE SAUSALITO FERRY TERMINAL IMPROVEMENTS

SHEET TITLE
DETAIL SITE LAYOUT
1 OF 2

GOLDEN GATE BRIDGE HIGHWAY & TRANSPORTATION DISTRICT

P:\7038 GGBD Ferry Terminals\500 Cadd\560 Working\SAUSALITO\CADD\703800_C.2.dwg Jul 21, 2014 - 8:41am

REV. NO.	SHEET NO.	TOTAL SHEETS
----	----	----

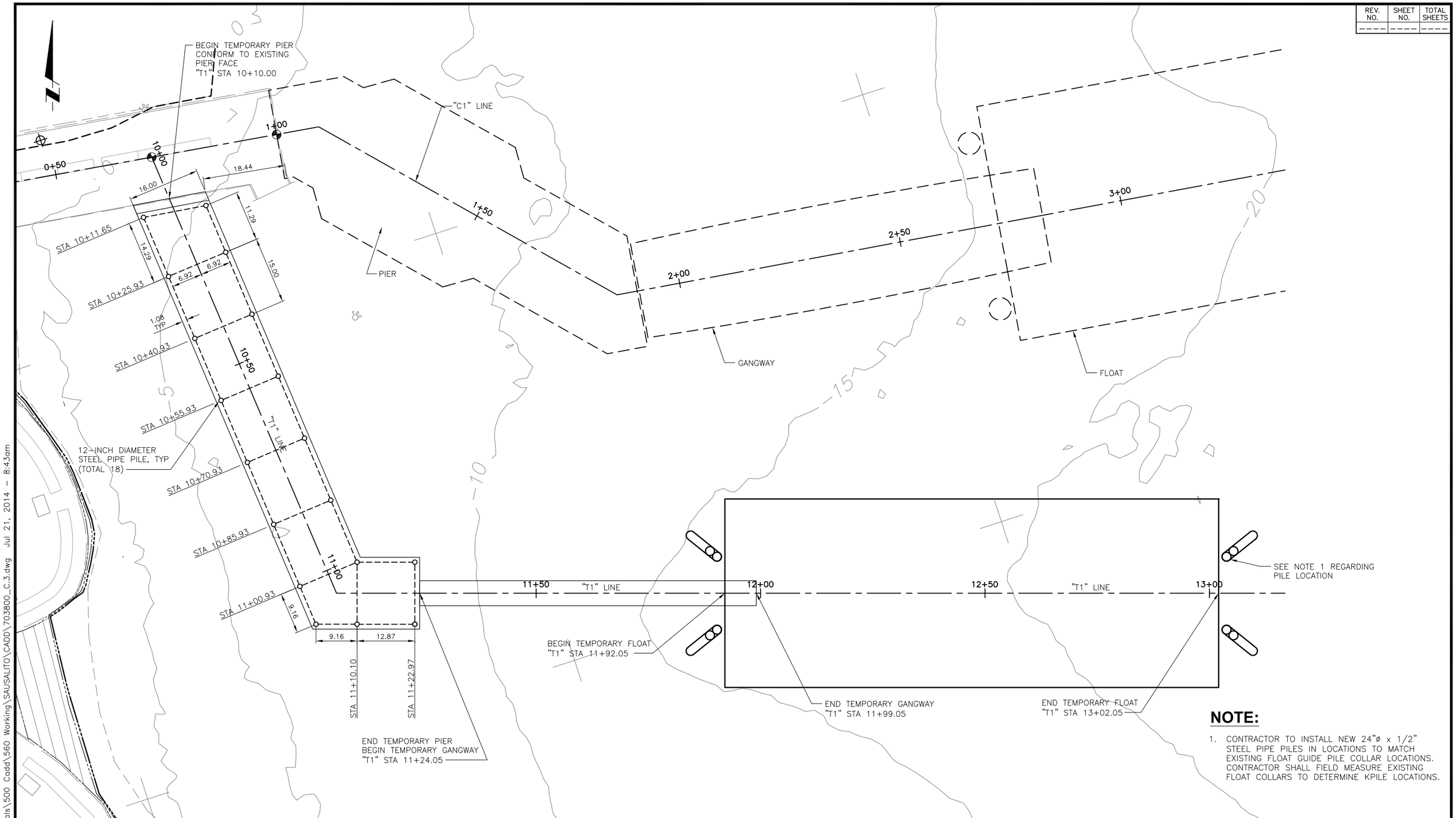

NOTE:

1. CONTRACTOR TO INSTALL NEW 24"ø x 1/2" STEEL PIPE PILES IN LOCATIONS TO MATCH EXISTING FLOAT GUIDE PILE COLLAR LOCATIONS. CONTRACTOR SHALL FIELD MEASURE EXISTING FLOAT COLLARS TO DETERMINE KPILE LOCATIONS.

DESIGN	BY NN	CHECKED BJ	BO JENSEN PROJECT MANAGER
DRAWN	BY NN	CHECKED	
QUANTITIES	BY	CHECKED	

ORIGINAL SCALE IN INCHES FOR REDUCED PLANS 0 1 2 3

moffatt & nichol
2185 N. California Blvd., Suite 500
Walnut Creek, CA 94596

REGISTERED CIVIL ENGINEER
07/18/2014
PLANS APPROVAL DATE

NO.	REVISIONS	BY	DATE

CONTRACT NO. 2011-B-2
CADD FILE 703800_C.3.dwg
DRAWING NO. C.3

APPROVED BY
DISTRICT ENGINEER
DATE

PROJECT TITLE
GOLDEN GATE SAUSALITO FERRY TERMINAL IMPROVEMENTS

SHEET TITLE
DETAIL SITE LAYOUT
2 OF 2

GOLDEN GATE BRIDGE HIGHWAY & TRANSPORTATION DISTRICT

P:\7038 GGBD Ferry Terminals\500 Cadd\560 Working\SAUSALITO\CADD\703800_C.3.dwg Jul 21, 2014 - 8:43am

REV. NO.	SHEET NO.	TOTAL SHEETS
----	----	----

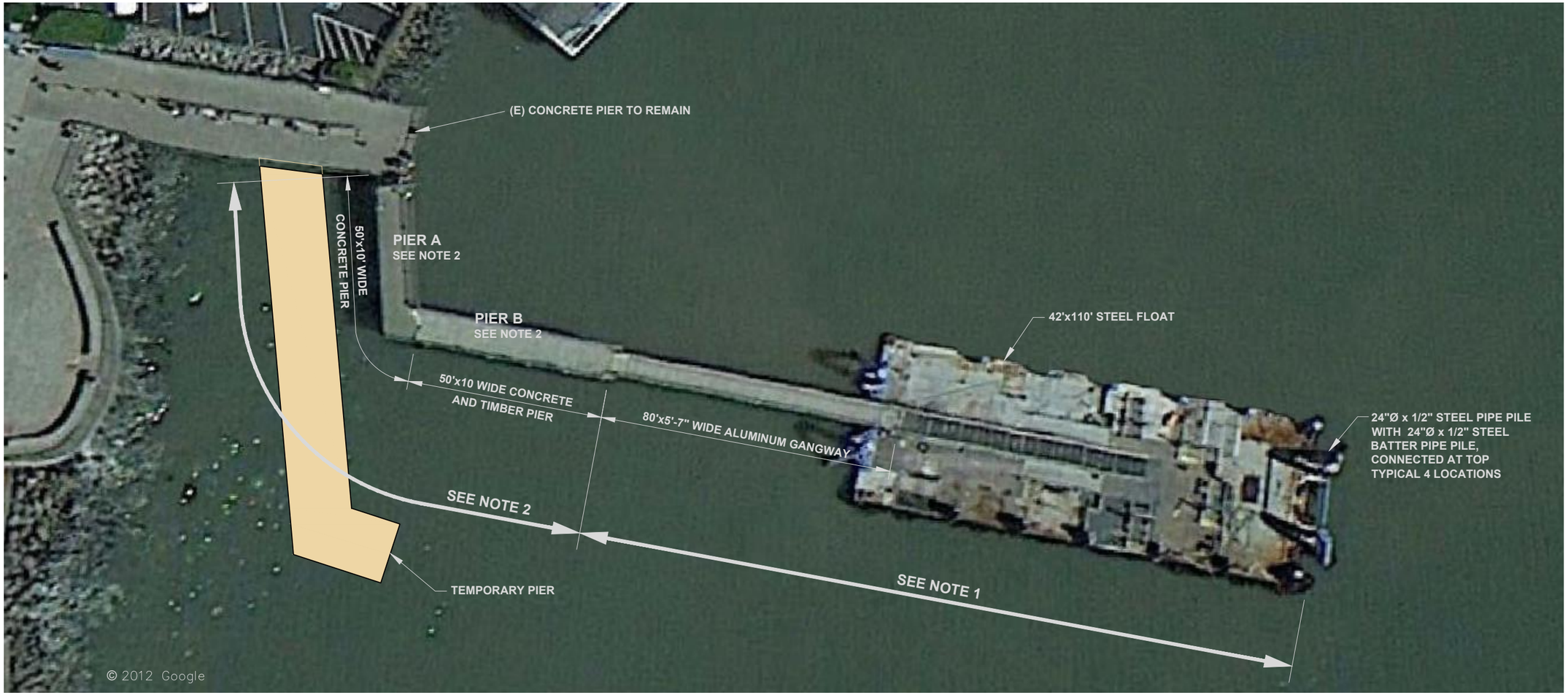

NOTES:

1. EXISTING ALUMINUM GANGWAY, AND STEEL FLOAT, TO BE RELOCATED BY CONTRACTOR. ALL PILES TO BE COMPLETELY REMOVED FOR FULL LENGTH. IF PILE CANNOT BE REMOVED FULL LENGTH, CUT PILE MINIMUM 2 FEET BELOW MUDLINE.
2. DEMOLISH AND REMOVE EXISTING PIER A, AND PIER B. SAW CUT PIER AT EXISTING PIER TO REMAIN AND CAP EXISTING UTILITIES. ALL PILES TO BE REMOVED FULL LENGTH. IF PILE CANNOT BE REMOVED FULL LENGTH, CUT PILE MINIMUM 2 FEET BELOW MUDLINE.
3. REFERENCE DRAWINGS OF THE EXISTING STRUCTURES AND UTILITIES TO BE REMOVED ARE AVAILABLE AND SHALL BE USED BY THE CONTRACTOR FOR SPECIFIC DETAILS REGARDING THESE FACILITIES.

30' 0 30' 60'
SCALE: 1"=30'-0"

DESIGN	BY BJ	CHECKED BJ	BO JENSEN PROJECT MANAGER
DRAWN	BY TE	CHECKED	
QUANTITIES	BY	CHECKED	

ORIGINAL SCALE IN INCHES FOR REDUCED PLANS 0 1 2 3

moffatt & nichol
2185 N. California Blvd., Suite 500
Walnut Creek, CA 94596

REGISTERED CIVIL ENGINEER
07/18/2014
PLANS APPROVAL DATE

NO.	REVISIONS	BY	DATE

CONTRACT NO. 2011-B-2
CADD FILE 703800_C.4.dwg
DRAWING NO. C.4

APPROVED BY
DISTRICT ENGINEER
DATE

PROJECT TITLE
GOLDEN GATE SAUSALITO FERRY TERMINAL IMPROVEMENTS

SHEET TITLE
DEMOLITION PLAN

GOLDEN GATE BRIDGE HIGHWAY & TRANSPORTATION DISTRICT

P:\7038 GGBD Ferry Terminals\500 Cadd\560 Working\SAUSALITO\CADD\703800_C.4.dwg Jul 18, 2014 - 1:45pm

REV. NO.	SHEET NO.	TOTAL SHEETS
----	----	----

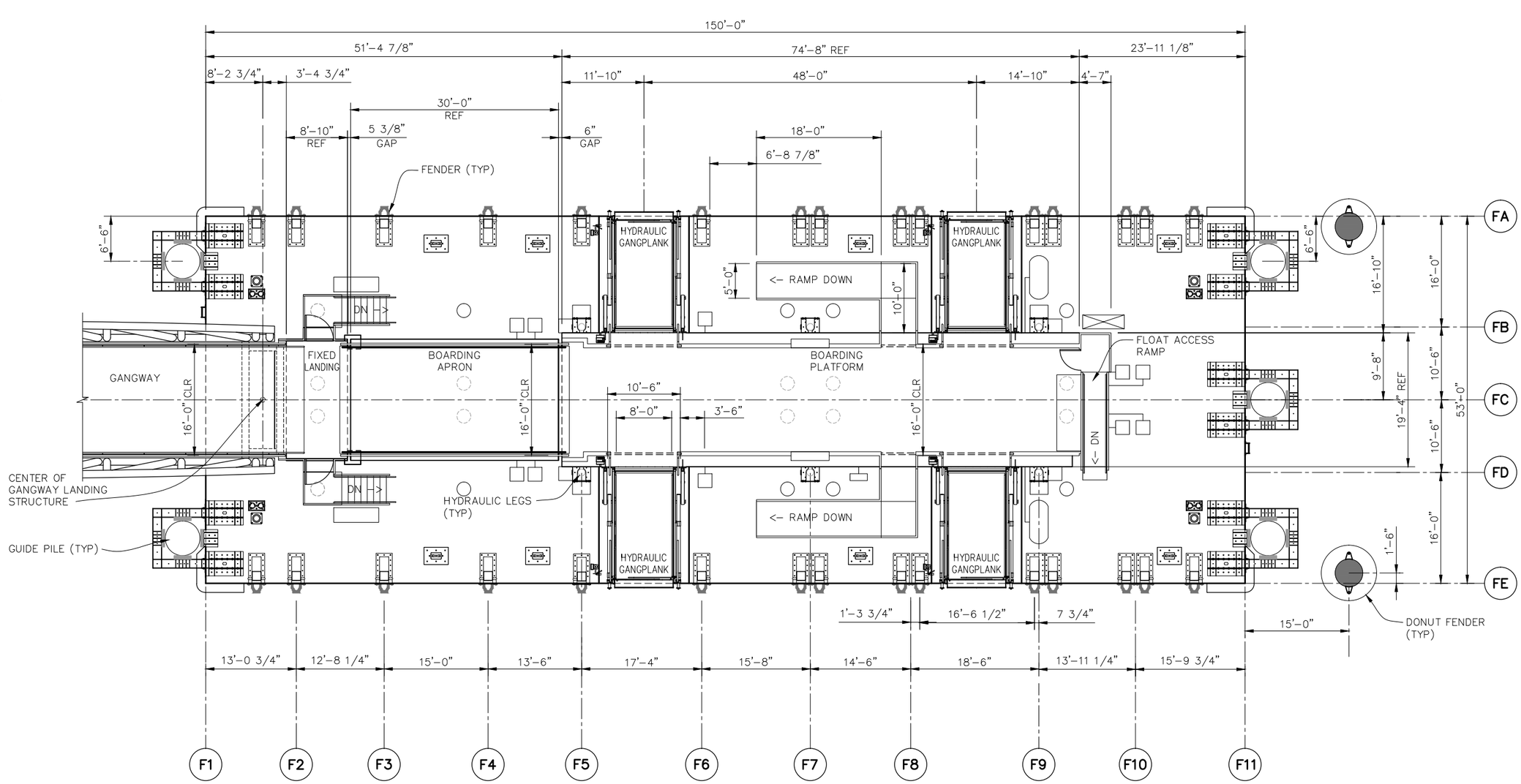

FLOAT DIMENSION PLAN

SCALE: 1/8" = 1'-0"

8'-0" 0'-0" 8'-0" 16'-0"

SCALE: 1/8"=1'-0"

DESIGN	BY MJW	CHECKED BJ	BO JENSEN PROJECT MANAGER
DRAWN	BY TE	CHECKED	
QUANTITIES	BY	CHECKED	

ORIGINAL SCALE IN INCHES FOR REDUCED PLANS 0 1 2 3

moffatt & nichol
2185 N. California Blvd., Suite 500
Walnut Creek, CA 94596

REGISTERED CIVIL ENGINEER
07/18/2014
PLANS APPROVAL DATE

NO.	REVISIONS	BY	DATE

CONTRACT NO. 2011-B-2
CADD FILE 703800_S1.2.dwg
DRAWING NO. S1.2

APPROVED BY
DISTRICT ENGINEER
DATE

PROJECT TITLE
GOLDEN GATE SAUSALITO FERRY TERMINAL IMPROVEMENTS

SHEET TITLE
FLOAT DIMENSION PLAN

GOLDEN GATE BRIDGE HIGHWAY & TRANSPORTATION DISTRICT

P:\7038 GGBD Ferry Terminals\500 Cadd\560 Working\SAUSALITO\CADD\703800_S1.2.dwg Jul 18, 2014 - 1:45pm

REV. NO.	SHEET NO.	TOTAL SHEETS
----	----	----

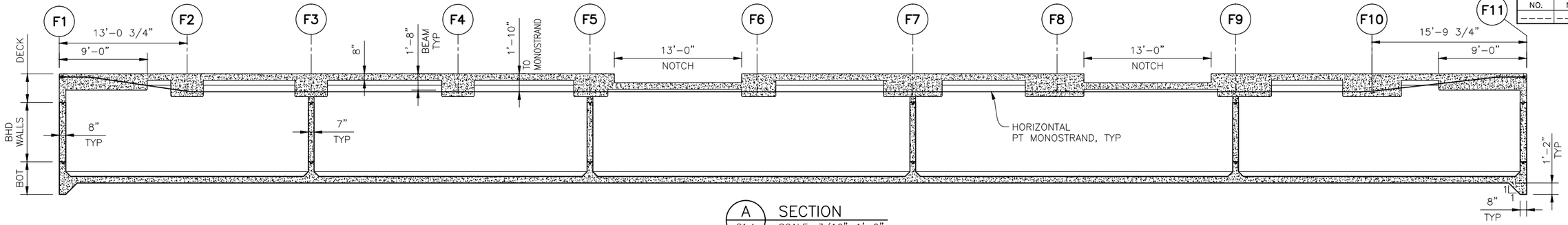

A S1.4 SECTION
SCALE: 3/16"=1'-0"

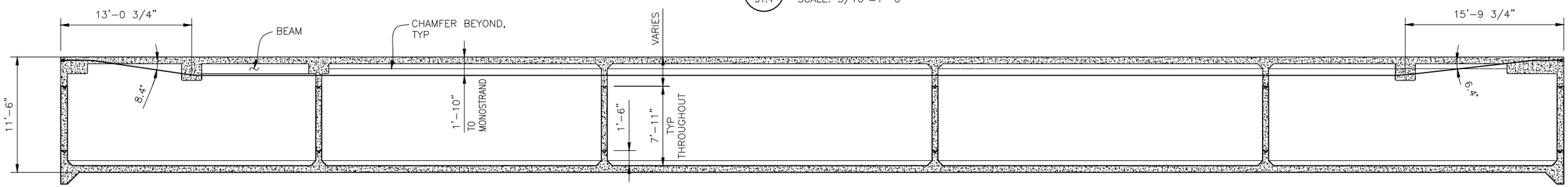

B S1.4 SECTION
SCALE: 3/16"=1'-0"

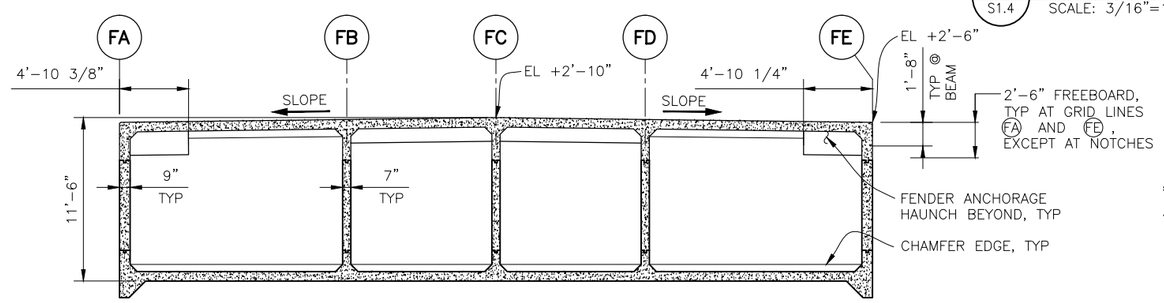

C S1.4 SECTION
SCALE: 3/16"=1'-0"

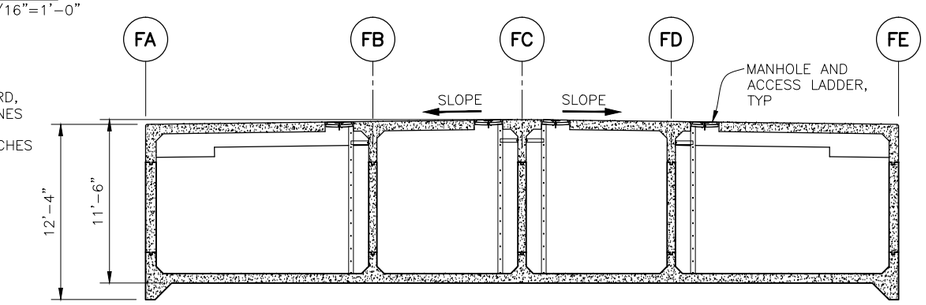

D S1.4 SECTION
SCALE: 3/16"=1'-0"

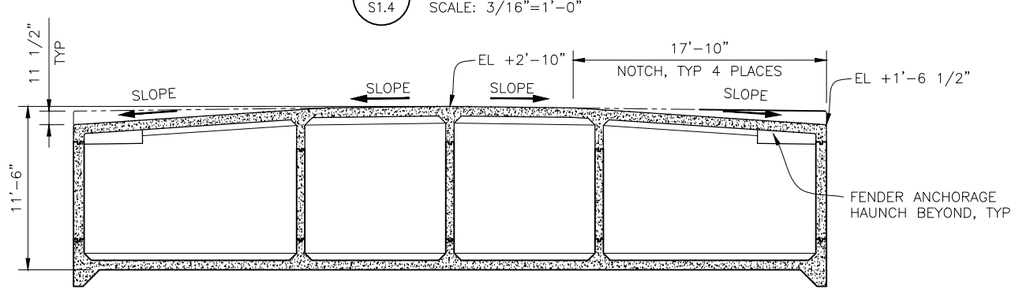

E S1.4 SECTION
SCALE: 3/16"=1'-0"

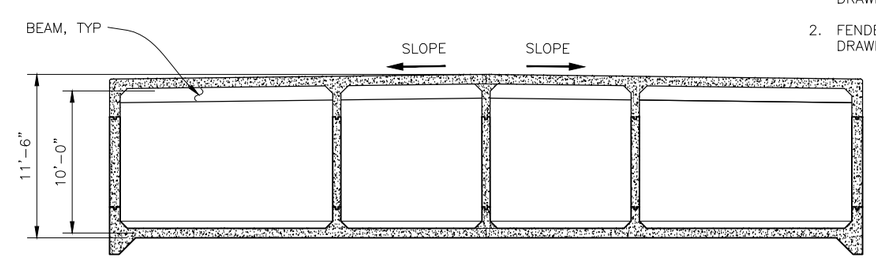

F S1.4 SECTION
SCALE: 3/16"=1'-0"

NOTES:

1. REINFORCING NOT SHOWN; SEE DRAWINGS S1.6 – S1.10.
2. FENDERS NOT SHOWN; SEE DRAWING S1.19 AND S1.20.

8'-0" 0'-0" 4'-0" 8'-0"
SCALE: 3/16"=1'-0"

DESIGN	BY MP	CHECKED BJ	BO JENSEN PROJECT MANAGER
DRAWN	BY TE	CHECKED	
QUANTITIES	BY	CHECKED	

ORIGINAL SCALE IN INCHES FOR REDUCED PLANS 0 1 2 3

moffatt & nichol
2185 N. California Blvd., Suite 500
Walnut Creek, CA 94596

REGISTERED CIVIL ENGINEER
07/18/2014 –
PLANS APPROVAL DATE

NO.	REVISIONS	BY	DATE

CONTRACT NO. 2011–B–2
CADD FILE 703800_S1.5.dwg
DRAWING NO. S1.5

APPROVED BY
DISTRICT ENGINEER
DATE

PROJECT TITLE
GOLDEN GATE SAUSALITO FERRY TERMINAL IMPROVEMENTS

SHEET TITLE
FLOAT LONGITUDINAL & TRANSVERSE SECTIONS

GOLDEN GATE BRIDGE HIGHWAY & TRANSPORTATION DISTRICT

P:\7038 GGBD Ferry Terminals\500 Cadd\560 Working\SAUSALITO\CADD\703800_S1.5.dwg Jul 18, 2014 – 1:45pm

REV. NO.	SHEET NO.	TOTAL SHEETS
----	----	----

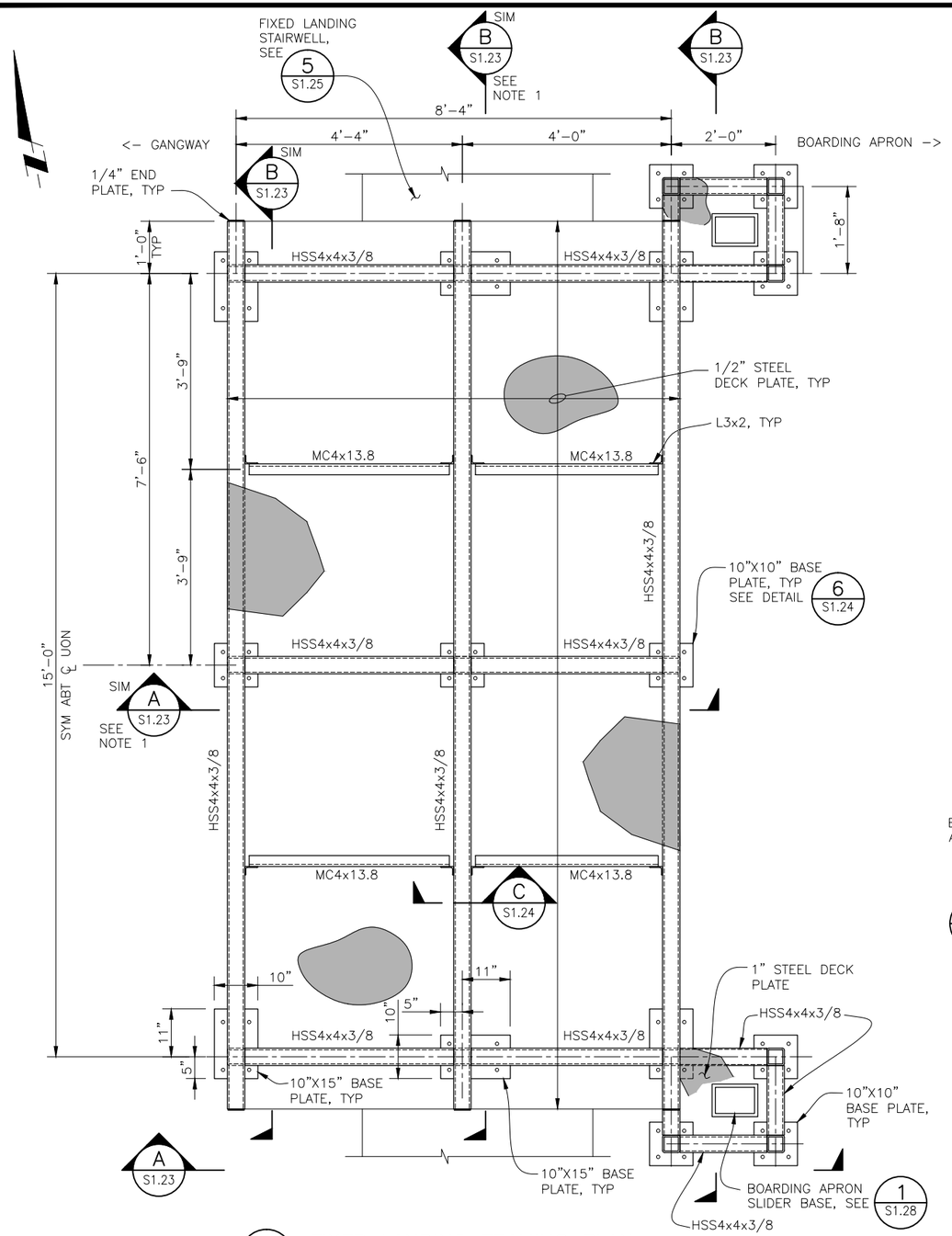

4 S1.1 FIXED LANDING FRAMING PLAN
SCALE: 3/4"=1'-0"

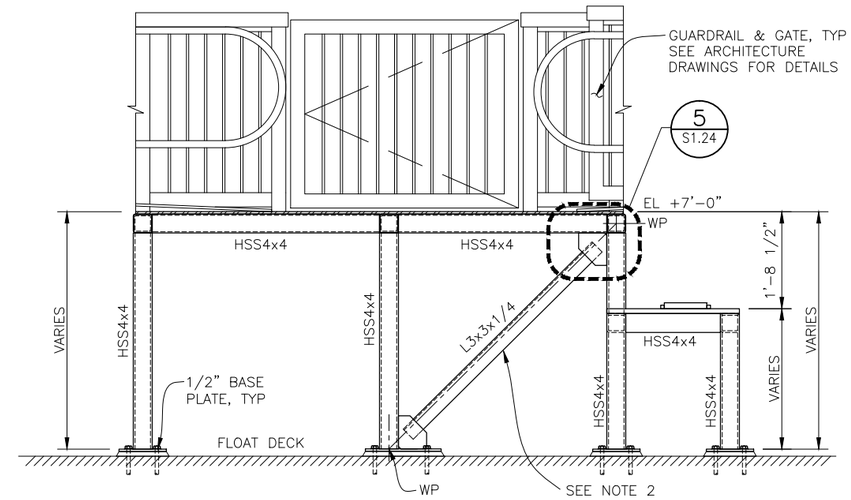

A S1.23 SECTION
SCALE: 3/4"=1'-0"

NOTES:

1. SECTION DOES NOT HAVE A DIAGONAL BRACE.
2. FLANGE OF L3x3x¼ ANGLE SHALL POINT AWAY FROM THE EDGE OF THE FLOAT.

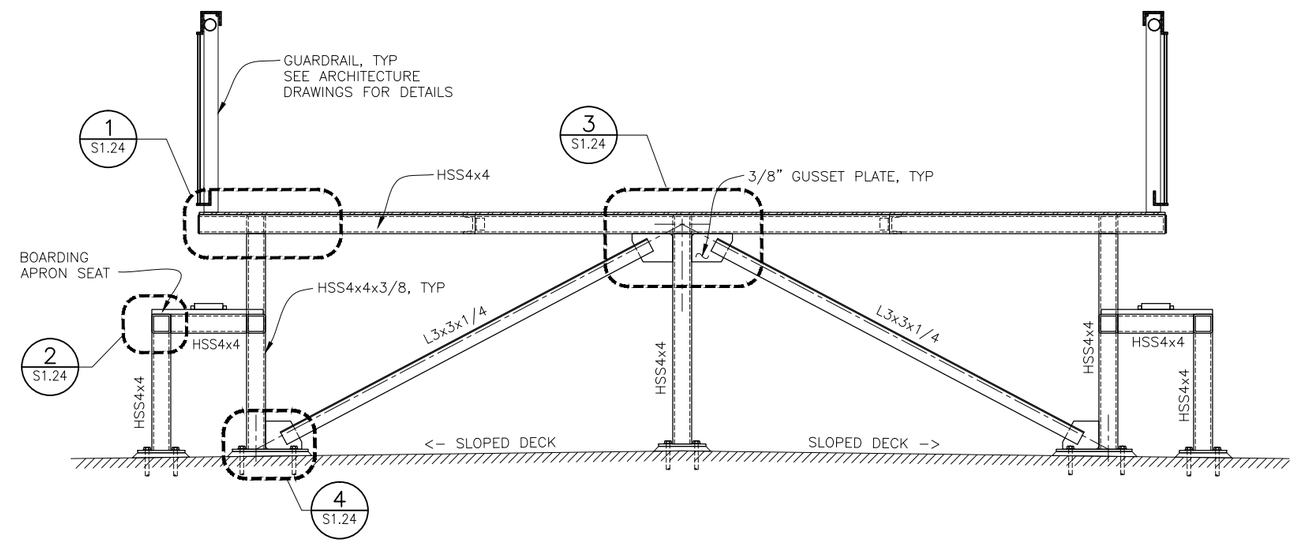

B S1.23 ELEVATION
SCALE: 3/4"=1'-0"

2'-0" 0'-0" 1'-0" 2'-0"
SCALE: 3/4"=1'-0"

ORIGINAL SCALE IN INCHES FOR REDUCED PLANS 0 1 2 3

DESIGN	BY MJW	CHECKED BJ	BO JENSEN PROJECT MANAGER
DRAWN	BY AIB	CHECKED	
QUANTITIES	BY	CHECKED	

moffatt & nichol
2185 N. California Blvd., Suite 500
Walnut Creek, CA 94596

REGISTERED CIVIL ENGINEER
07/18/2014
PLANS APPROVAL DATE

NO.	REVISIONS	BY	DATE

CONTRACT NO. 2011-B-2
CADD FILE 703800_S1.23.dwg
DRAWING NO. S1.23

APPROVED BY
DISTRICT ENGINEER
DATE

PROJECT TITLE
GOLDEN GATE SAUSALITO FERRY TERMINAL IMPROVEMENTS

SHEET TITLE
FLOAT FIXED LANDING PLAN, ELEVATION & SECTION

GOLDEN GATE BRIDGE HIGHWAY & TRANSPORTATION DISTRICT

P:\7038 GGBD Ferry Terminals\500 Cadd\560 Working\SAUSALITO\CADD\703800_S1.23.dwg Jul 18, 2014 - 1:46pm

REV. NO.	SHEET NO.	TOTAL SHEETS
----	----	----

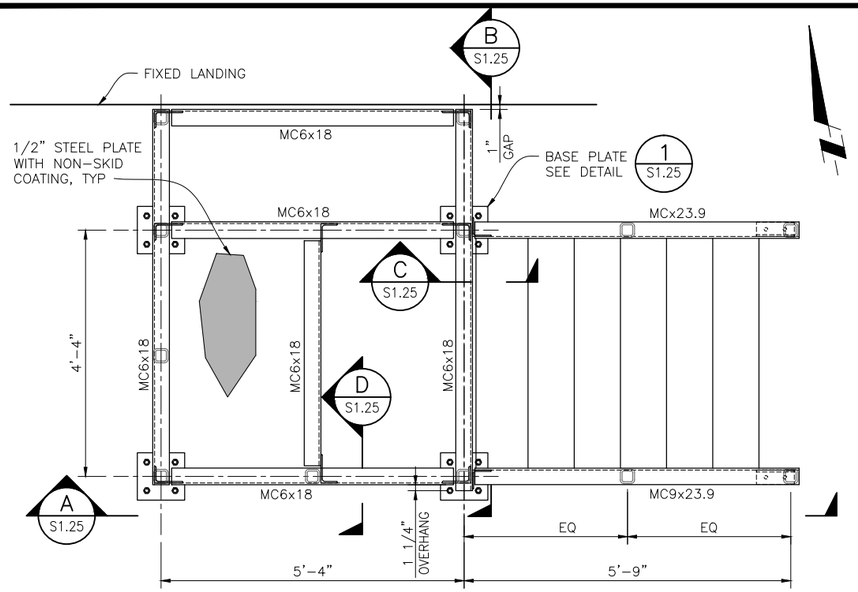

5 S1.1 FIXED LANDING STAIRWELL – PLAN
SCALE: 3/4"=1'-0"

NOTE: KICK PLATE & GUARDRAIL NOT SHOWN FOR CLARITY.

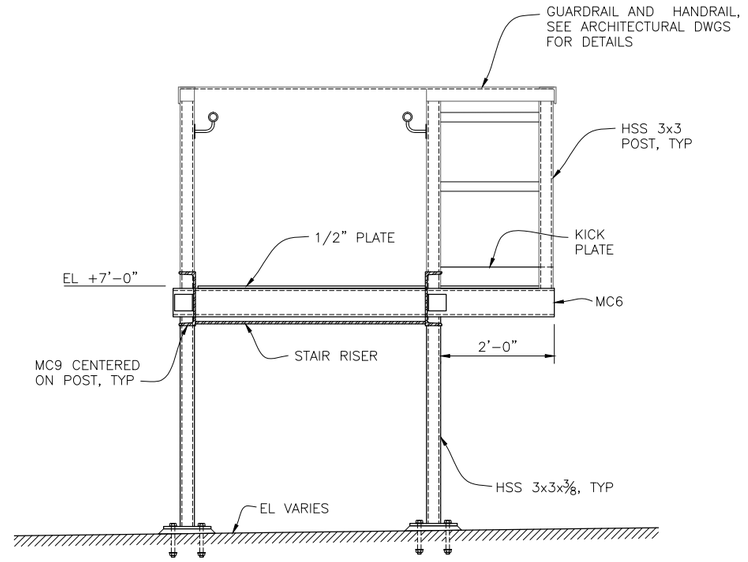

B S1.25 SECTION
SCALE: 3/4"=1'-0"

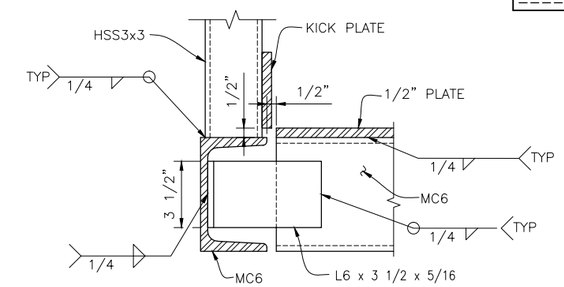

D S1.25 SECTION
SCALE: 3"=1'-0"

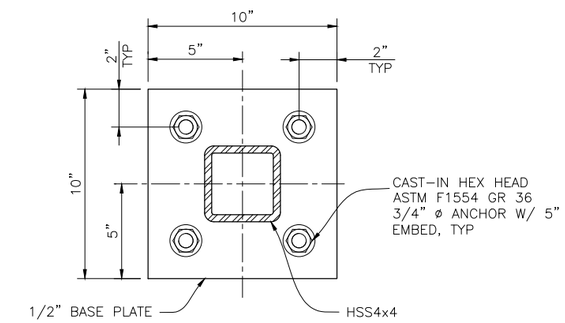

1 S1.25 DETAIL
SCALE: 3"=1'-0"

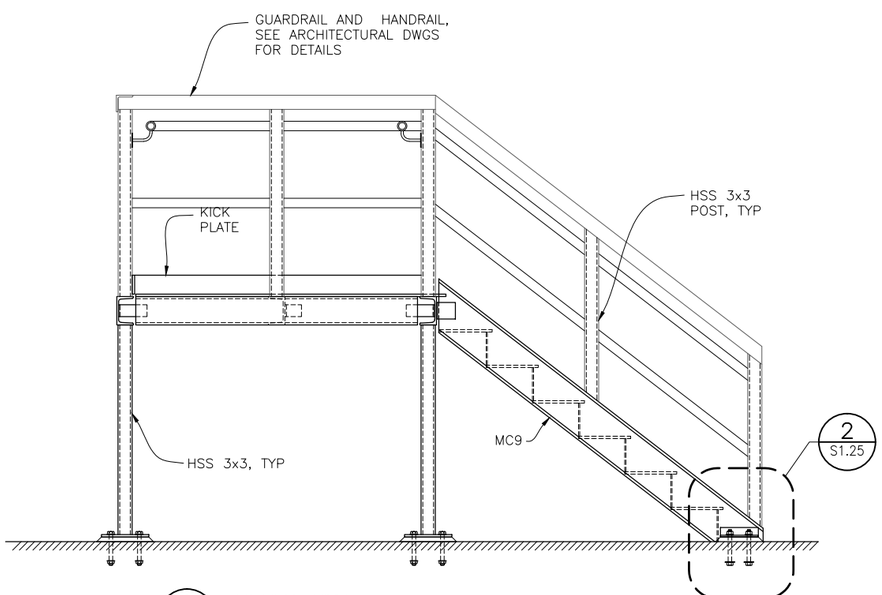

A S1.25 ELEVATION
SCALE: 3/4"=1'-0"

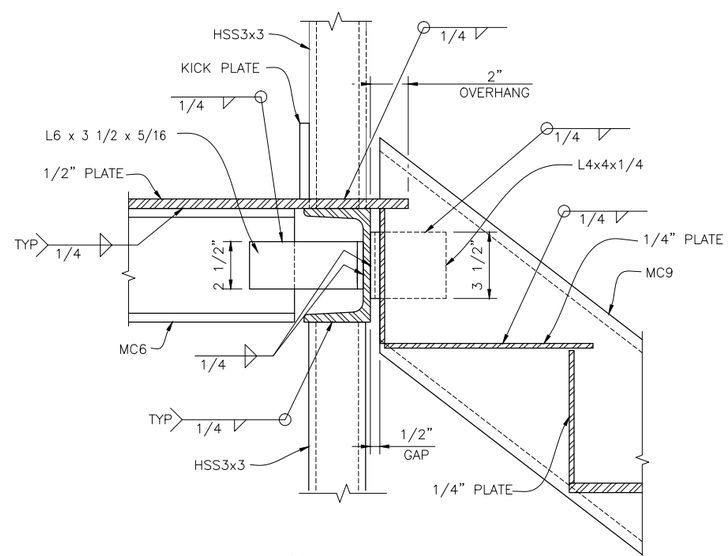

C S1.25 SECTION
SCALE: 3"=1'-0"

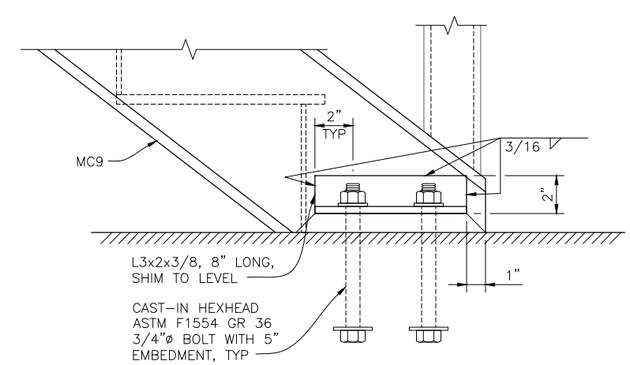

2 S1.25 DETAIL
SCALE: 3"=1'-0"

6" 0'-0" 3" 6"
SCALE: 3"=1'-0"

2'-0" 0'-0" 1'-0" 2'-0"
SCALE: 3/4"=1'-0"

ORIGINAL SCALE IN INCHES FOR REDUCED PLANS 0 1 2 3

NOTES:

1. SEAL WELD ALL CONNECTIONS WITH MIN 3/16" FILLET WELD.

DESIGN	BY MP	CHECKED BJ	BO JENSEN PROJECT MANAGER
DRAWN	BY AIB	CHECKED	
QUANTITIES	BY	CHECKED	

moffatt & nichol
2185 N. California Blvd., Suite 500
Walnut Creek, CA 94596

REGISTERED CIVIL ENGINEER
07/18/2014
PLANS APPROVAL DATE

NO.	REVISIONS	BY	DATE

CONTRACT NO. 2011-B-2
CADD FILE 703800_S1.25.dwg
DRAWING NO. S1.25

APPROVED BY
DISTRICT ENGINEER
DATE

PROJECT TITLE
GOLDEN GATE SAUSALITO FERRY TERMINAL IMPROVEMENTS

SHEET TITLE
FLOAT FIXED LANDING STAIRWAY

GOLDEN GATE BRIDGE HIGHWAY & TRANSPORTATION DISTRICT

P:\7038 GGBD Ferry Terminals\500 Cadd\560 Working\SAUSALITO\CADD\703800_S1.25.dwg Jul 18, 2014 – 1:46pm

REV. NO.	SHEET NO.	TOTAL SHEETS

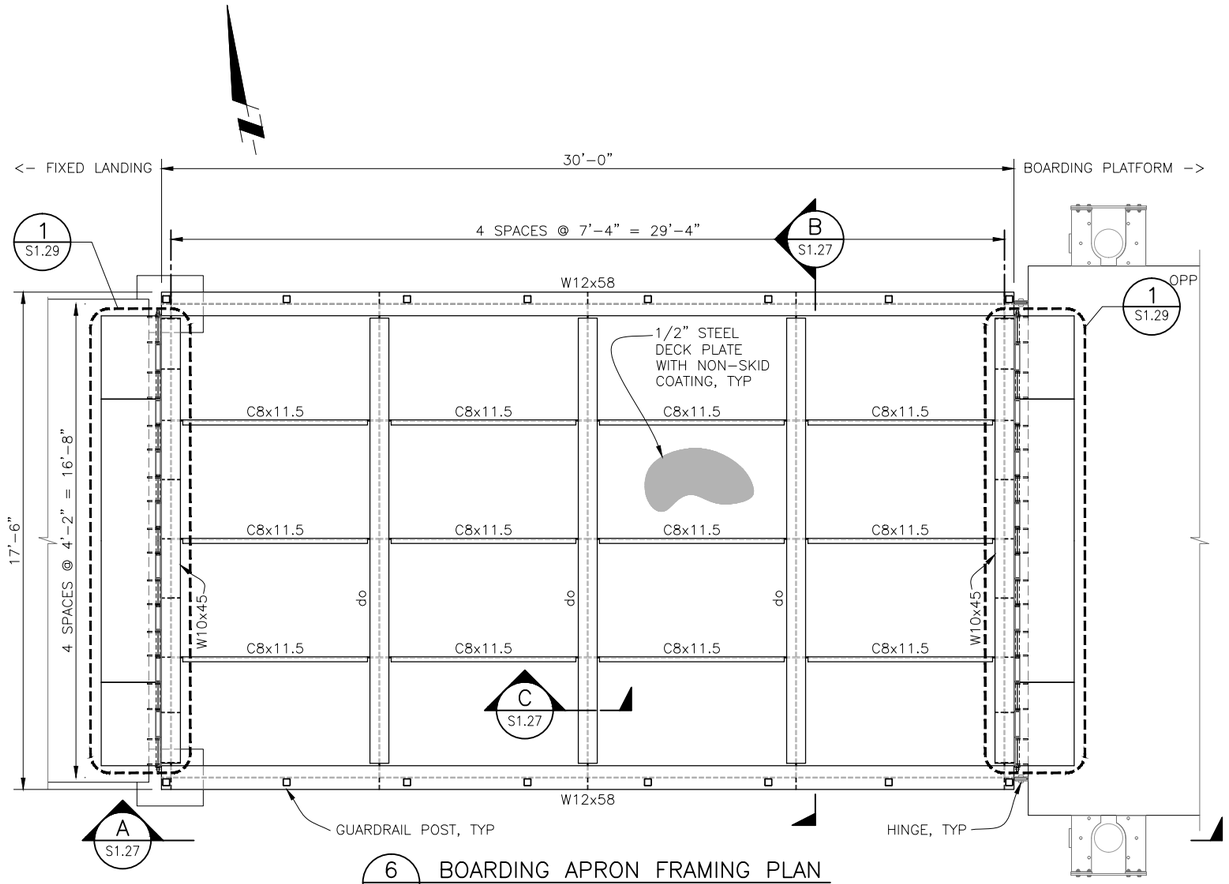

6 S1.1 BOARDING APRON FRAMING PLAN
SCALE: 3/8"=1'–0"

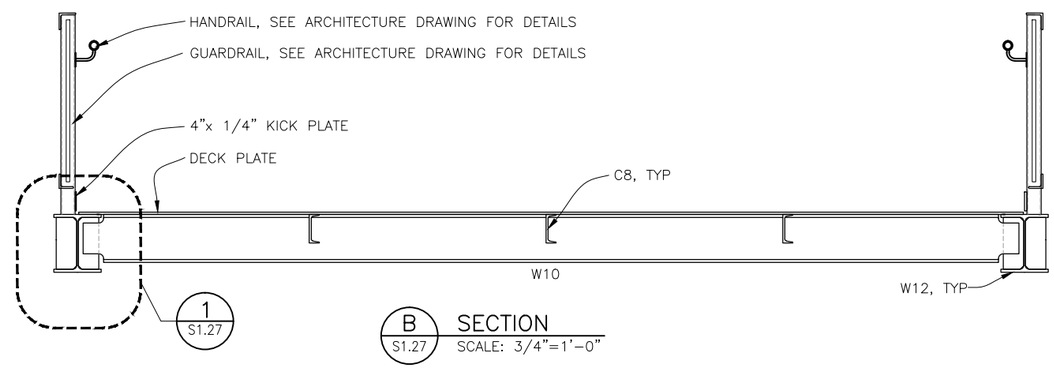

B S1.27 SECTION
SCALE: 3/4"=1'–0"

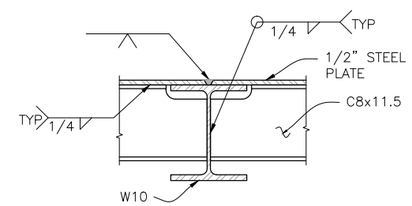

C S1.27 SECTION
SCALE: 1 1/2"=1'–0"

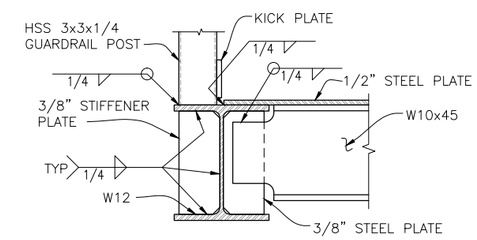

1 S1.27 DETAIL
SCALE: 1 1/2"=1'–0"

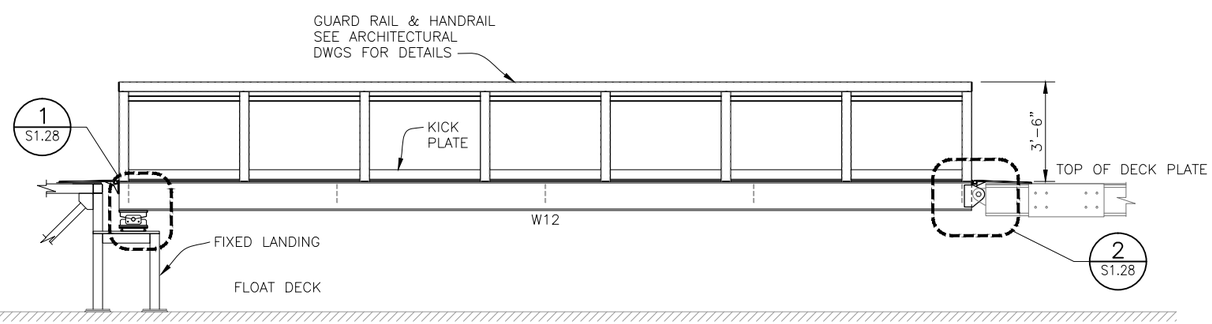

A S1.27 ELEVATION
SCALE: 3/8"=1'–0"

1'–0" 0'–0" 6" 1'–0"
SCALE: 1 1/2"=1'–0"
4'–0" 0'–0" 2'–0" 4'–0"
SCALE: 3/8"=1'–0"

DESIGN	BY MJW	CHECKED BJ	BO JENSEN PROJECT MANAGER
DRAWN	BY AIB	CHECKED	
QUANTITIES	BY	CHECKED	

ORIGINAL SCALE IN INCHES FOR REDUCED PLANS 0 1 2 3

moffatt & nichol
2185 N. California Blvd., Suite 500
Walnut Creek, CA 94596

REGISTERED CIVIL ENGINEER
07/18/2014
PLANS APPROVAL DATE

NO.	REVISIONS	BY	DATE

CONTRACT NO. 2011–B–2
CADD FILE 703800_S1.27.dwg
DRAWING NO. S1.27

APPROVED BY
DISTRICT ENGINEER
DATE

PROJECT TITLE
GOLDEN GATE SAUSALITO FERRY TERMINAL IMPROVEMENTS

SHEET TITLE
FLOAT BOARDING APRON PLAN, ELEVATION & SECTION

GOLDEN GATE BRIDGE HIGHWAY & TRANSPORTATION DISTRICT

P:\7038 GGBD Ferry Terminals\500 Cadd\560 Working\SAUSALITO\CADD\703800_S1.27.dwg Jul 18, 2014 – 1:46pm

REV. NO.	SHEET NO.	TOTAL SHEETS

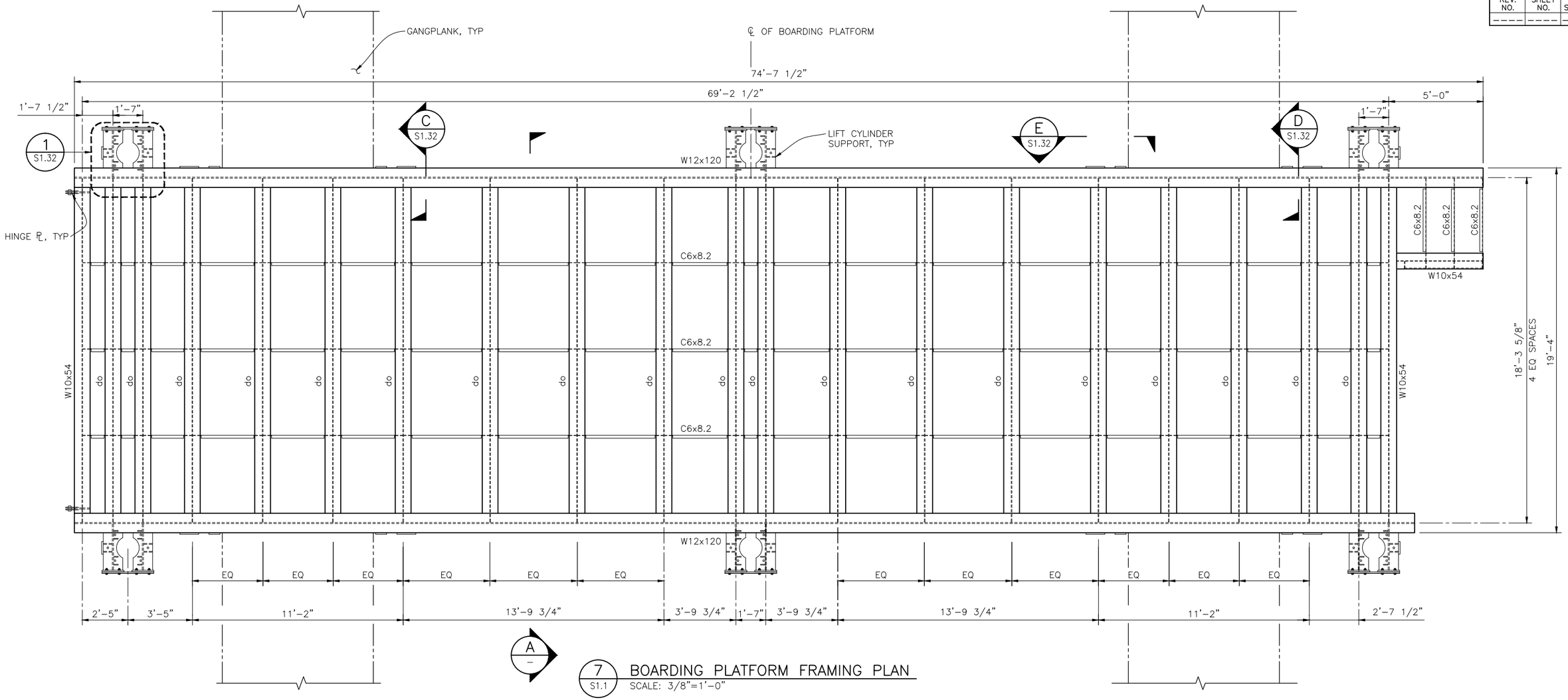

7 S1.1 BOARDING PLATFORM FRAMING PLAN
SCALE: 3/8"=1'-0"

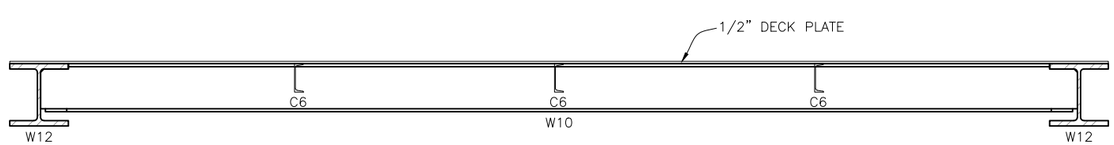

A S1.31 SECTION
SCALE: 3/4"=1'-0"

2'-0" 0'-0" 1'-0" 2'-0"
SCALE: 3/4"=1'-0"

4'-0" 0'-0" 2'-0" 4'-0"
SCALE: 3/8"=1'-0"

DESIGN	BY MJW	CHECKED BJ	BO JENSEN PROJECT MANAGER
DRAWN	BY AIB	CHECKED	
QUANTITIES	BY	CHECKED	

ORIGINAL SCALE IN INCHES FOR REDUCED PLANS 0 1 2 3

moffatt & nichol
2185 N. California Blvd., Suite 500
Walnut Creek, CA 94596

REGISTERED CIVIL ENGINEER
07/18/2014
PLANS APPROVAL DATE

NO.	REVISIONS	BY	DATE

CONTRACT NO. 2011-B-2
CADD FILE 703800_S1.31.dwg
DRAWING NO. S1.31

APPROVED BY
DISTRICT ENGINEER
DATE

PROJECT TITLE
GOLDEN GATE SAUSALITO FERRY TERMINAL IMPROVEMENTS

SHEET TITLE
FLOAT BOARDING PLATFORM PLAN & SECTION

GOLDEN GATE BRIDGE HIGHWAY & TRANSPORTATION DISTRICT

P:\7038 GGBD Ferry Terminals\500 Cadd\560 Working\SAUSALITO\CADD\703800_S1.31.dwg Jul 18, 2014 - 1:46pm

REV. NO.	SHEET NO.	TOTAL SHEETS
----	----	----

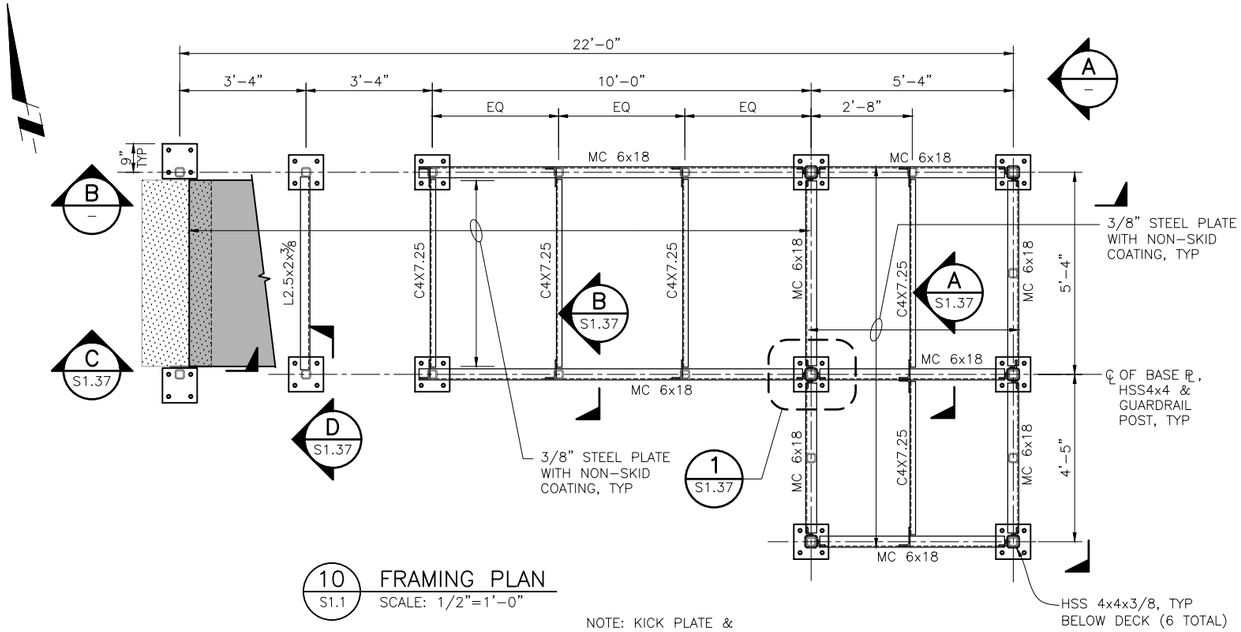

10 S1.1 FRAMING PLAN
SCALE: 1/2"=1'-0"

NOTE: KICK PLATE & GUARDRAIL NOT SHOWN FOR CLARITY.

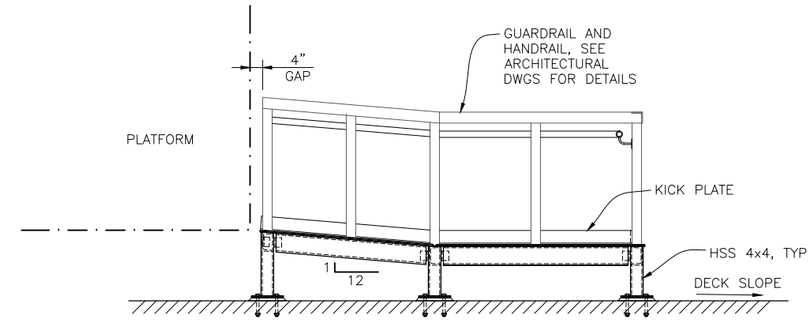

A S1.36 SECTION
SCALE: 1/2"=1'-0"

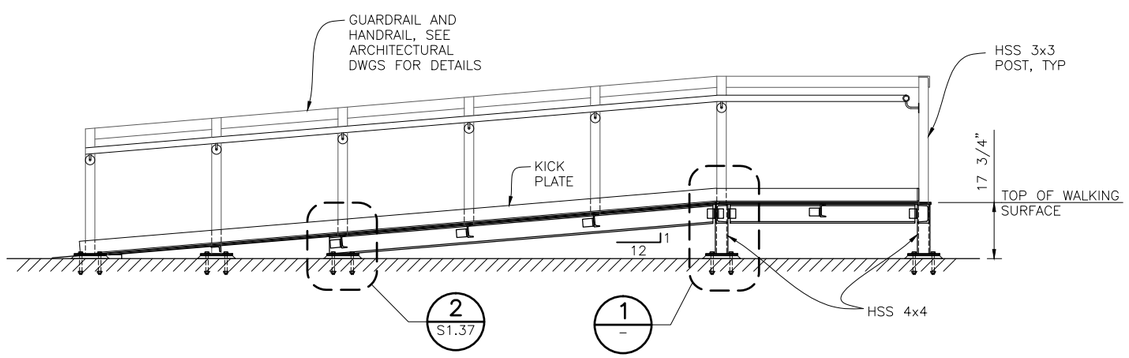

B S1.36 SECTION
SCALE: 1/2"=1'-0"

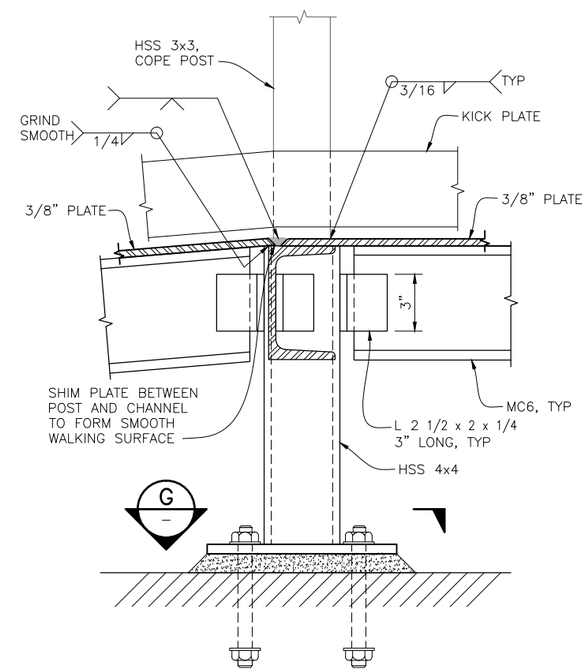

1 - DETAIL
SCALE: 3"=1'-0"

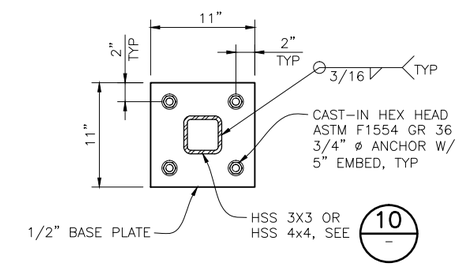

G - TYPICAL SECTION
SCALE: 1 1/2"=1'-0"

2'-0" 0'-0" 2'-0" 4'-0"
SCALE: 1/2"=1'-0"
1'-0" 0'-0" 6" 1'-0"
SCALE: 1 1/2"=1'-0"

ORIGINAL SCALE IN INCHES FOR REDUCED PLANS 0 1 2 3

DESIGN	BY MP	CHECKED BJ	BO JENSEN PROJECT MANAGER
DRAWN	BY AIB	CHECKED	
QUANTITIES	BY	CHECKED	

moffatt & nichol
2185 N. California Blvd., Suite 500
Walnut Creek, CA 94596

REGISTERED CIVIL ENGINEER
07/18/2014
PLANS APPROVAL DATE

NO.	REVISIONS	BY	DATE

CONTRACT NO. 2011-B-2
CADD FILE 703800_S1.36.dwg
DRAWING NO. S1.36

APPROVED BY
DISTRICT ENGINEER
DATE

PROJECT TITLE
GOLDEN GATE SAUSALITO FERRY TERMINAL IMPROVEMENTS

SHEET TITLE
FLOAT FIXED BOARDING RAMP SHEET 1

GOLDEN GATE BRIDGE HIGHWAY & TRANSPORTATION DISTRICT

P:\7038 GGBD Ferry Terminals\500 Cadd\560 Working\SAUSALITO\CADD\703800_S1.36.dwg Jul 18, 2014 - 1:46pm

REV. NO.	SHEET NO.	TOTAL SHEETS
----	----	----

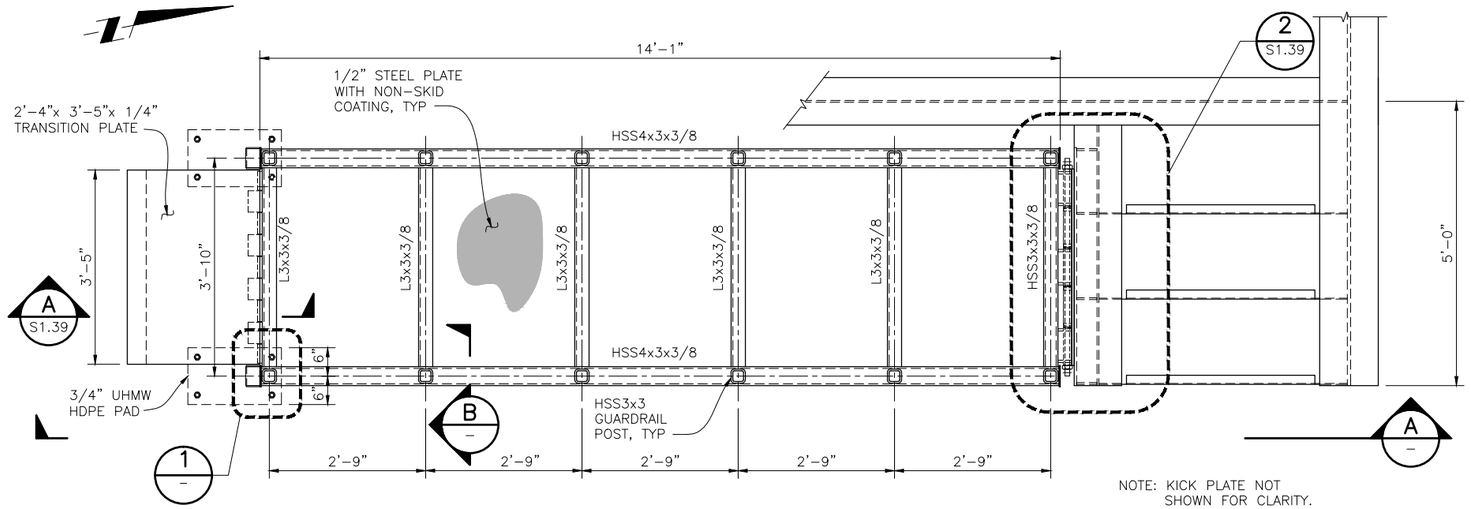

NOTE: KICK PLATE NOT SHOWN FOR CLARITY.

11 / S1.1 FLOAT ACCESS RAMP FRAMING PLAN
SCALE: 3/4"=1'-0"

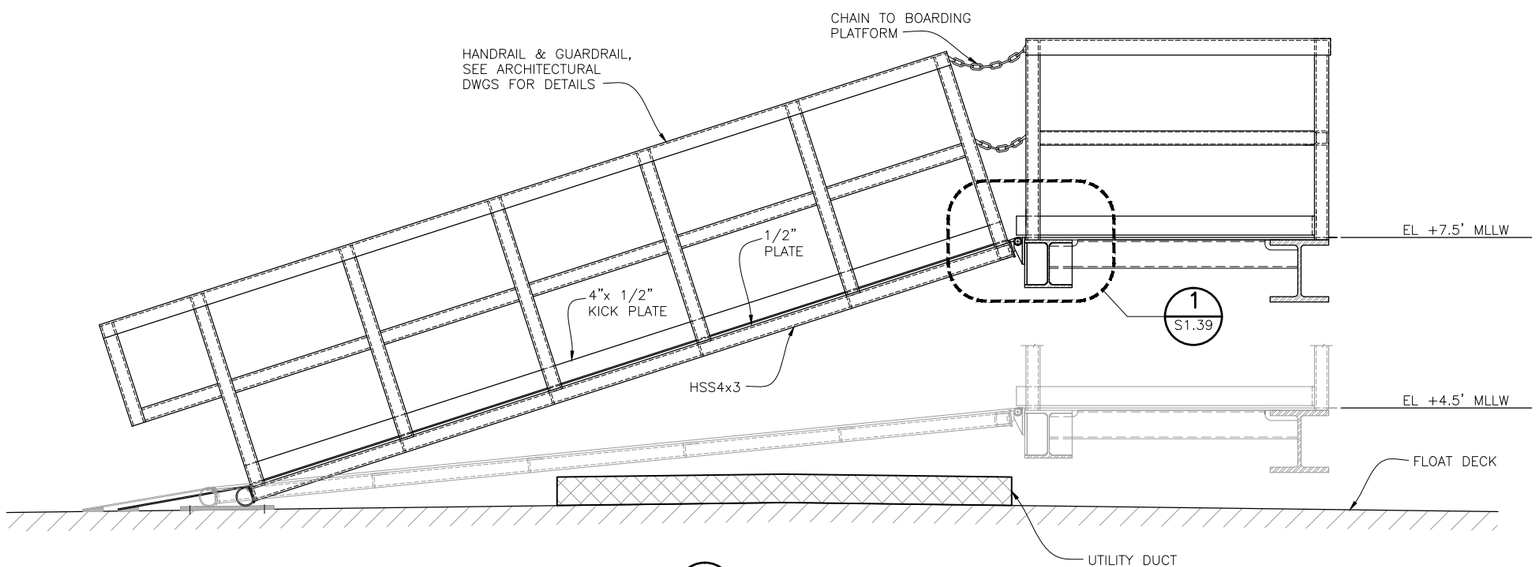

A ELEVATION
SCALE: 3/4"=1'-0"

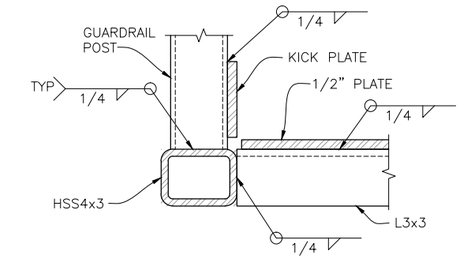

B SECTION
SCALE: 3"=1'-0"

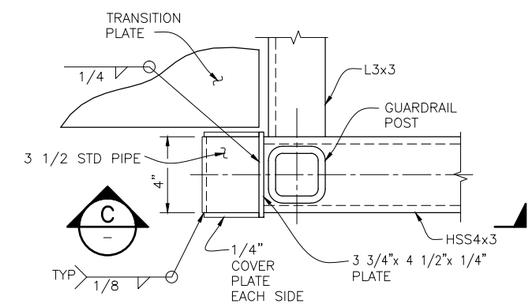

1 DETAIL
SCALE: 3"=1'-0"

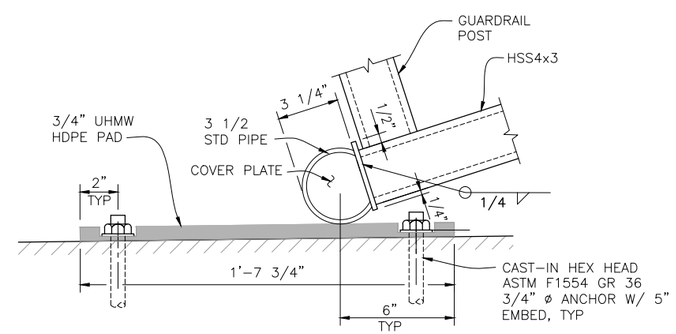

C ELEVATION
SCALE: 3"=1'-0"

2'-0" 0'-0" 1'-0" 2'-0"
SCALE: 3/4"=1'-0"

6" 0'-0" 3" 6"
SCALE: 3"=1'-0"

ORIGINAL SCALE IN INCHES FOR REDUCED PLANS 0 1 2 3

DESIGN	BY MP	CHECKED BJ	BO JENSEN PROJECT MANAGER
DRAWN	BY AIB	CHECKED	
QUANTITIES	BY	CHECKED	

moffatt & nichol
2185 N. California Blvd., Suite 500
Walnut Creek, CA 94596

REGISTERED CIVIL ENGINEER
07/18/2014
PLANS APPROVAL DATE

NO.	REVISIONS	BY	DATE

CONTRACT NO. 2011-B-2
CADD FILE 703800_S1.38.dwg
DRAWING NO. S1.38

APPROVED BY
DISTRICT ENGINEER
DATE

PROJECT TITLE
GOLDEN GATE SAUSALITO FERRY TERMINAL IMPROVEMENTS

SHEET TITLE
FLOAT ACCESS RAMP PLAN DETAILS SHEET 1

GOLDEN GATE BRIDGE HIGHWAY & TRANSPORTATION DISTRICT

P:\7038 GGBD Ferry Terminals\500 Cadd\560 Working\SAUSALITO\CADD\703800_S1.38.dwg Jul 18, 2014 - 1:47pm

REV. NO.	SHEET NO.	TOTAL SHEETS
----	----	----

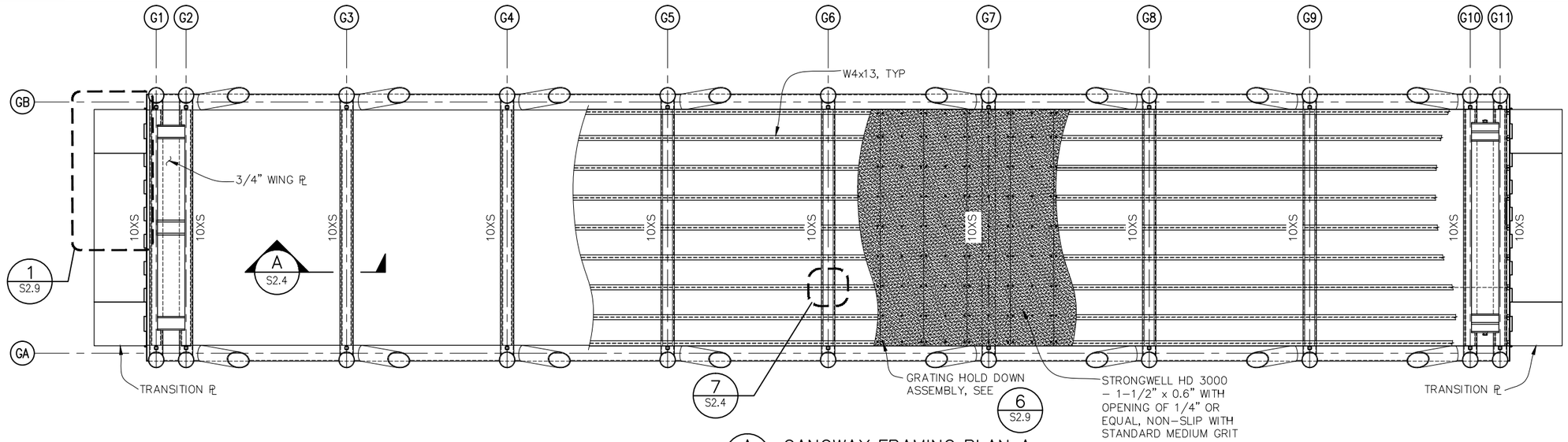

A S1.1 S2.2 GANGWAY FRAMING PLAN A
SCALE: 1/4"=1'–0"

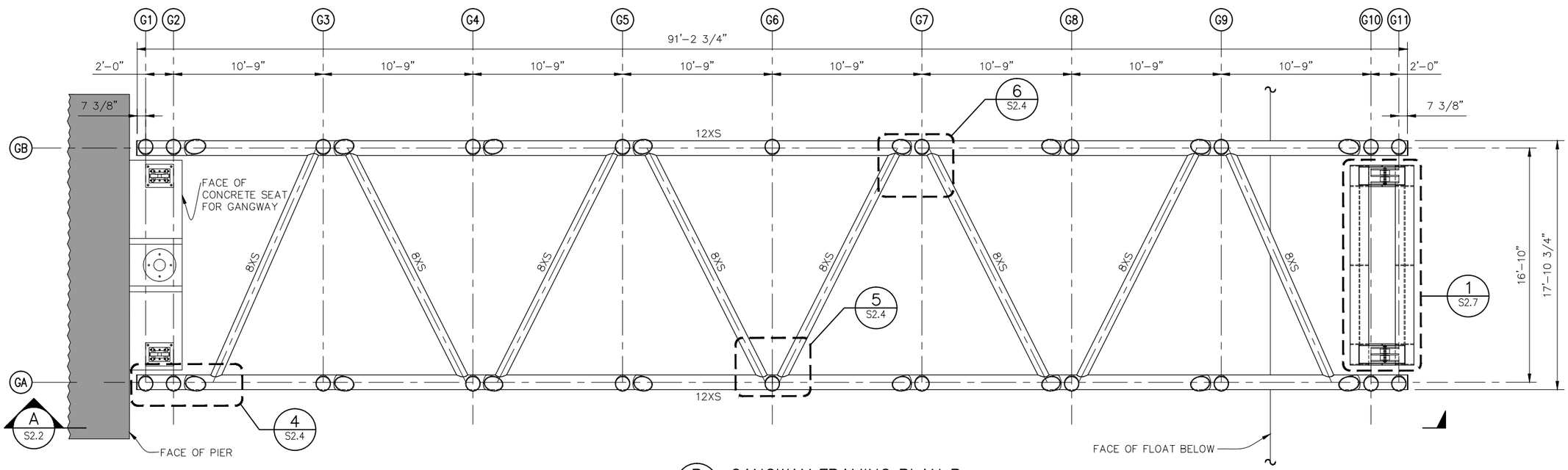

B S2.2 GANGWAY FRAMING PLAN B
SCALE: 1/4"=1'–0"

4'–0" 0'–0" 4'–0" 8'–0"
SCALE: 1/4"=1'–0"

DESIGN	BY AB	CHECKED BJ	BO JENSEN PROJECT MANAGER
DRAWN	BY EBD	CHECKED	
QUANTITIES	BY	CHECKED	

ORIGINAL SCALE IN INCHES FOR REDUCED PLANS 0 1 2 3

moffatt & nichol
2185 N. California Blvd., Suite 500
Walnut Creek, CA 94596

REGISTERED CIVIL ENGINEER
07/18/2014
PLANS APPROVAL DATE

NO.	REVISIONS	BY	DATE

CONTRACT NO. 2011–B–2
CADD FILE 703800_S2.1.dwg
DRAWING NO. S2.1

APPROVED BY
DISTRICT ENGINEER
DATE

PROJECT TITLE
GOLDEN GATE SAUSALITO FERRY TERMINAL IMPROVEMENTS

SHEET TITLE
GANGWAY FRAMING PLAN

GOLDEN GATE BRIDGE HIGHWAY & TRANSPORTATION DISTRICT

P:\7038 GGBD Ferry Terminals\500 Cadd\560 Working\SAUSALITO\CADD\703800_S2.1.dwg Jul 18, 2014 – 1:47pm

REV. NO.	SHEET NO.	TOTAL SHEETS
----	----	----

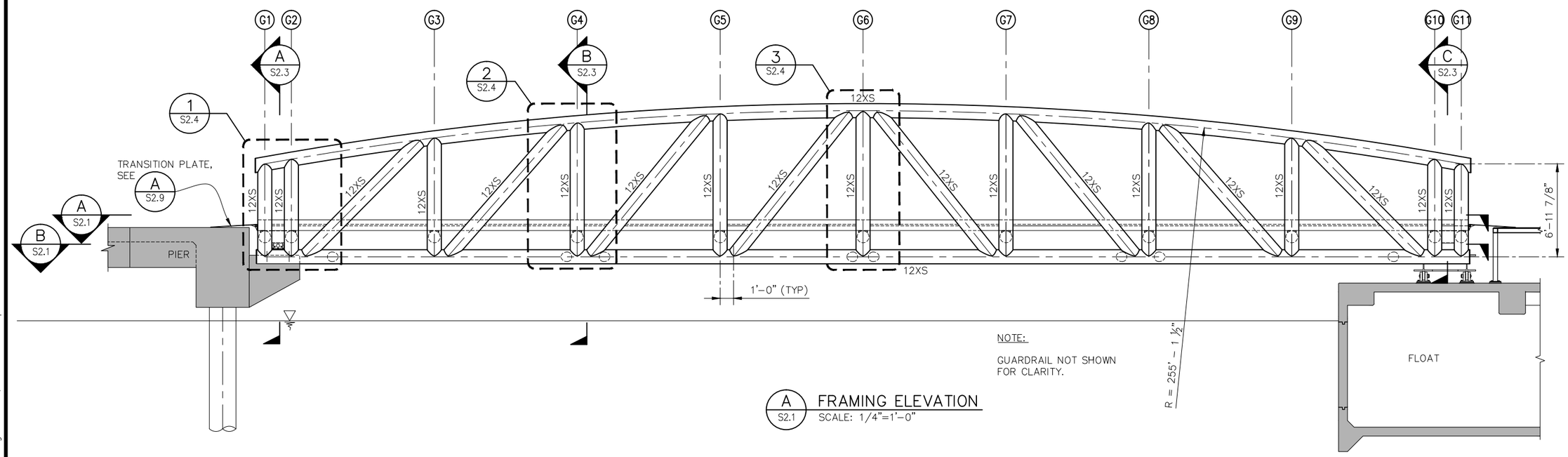

NOTE:

GUARDRAIL NOT SHOWN FOR CLARITY.

A S2.1 FRAMING ELEVATION
SCALE: 1/4"=1'-0"

4'-0" 0'-0" 4'-0" 8'-0"
SCALE: 1/4"=1'-0"

DESIGN	BY EBD	CHECKED BJ	BO JENSEN PROJECT MANAGER
DRAWN	BY TE	CHECKED	
QUANTITIES	BY	CHECKED	

ORIGINAL SCALE IN INCHES FOR REDUCED PLANS 0 1 2 3

moffatt & nichol
2185 N. California Blvd., Suite 500
Walnut Creek, CA 94596

REGISTERED CIVIL ENGINEER
07/18/2014
PLANS APPROVAL DATE

NO.	REVISIONS	BY	DATE

CONTRACT NO. 2011-B-2
CADD FILE 703800_S2.2.dwg
DRAWING NO. S2.2

APPROVED BY
DISTRICT ENGINEER
DATE

PROJECT TITLE
GOLDEN GATE SAUSALITO FERRY TERMINAL IMPROVEMENTS

SHEET TITLE
GANGWAY ELEVATION AND DETAILS

GOLDEN GATE BRIDGE HIGHWAY & TRANSPORTATION DISTRICT

P:\7038 GGBD Ferry Terminals\500 Cadd\560 Working\SAUSALITO\CADD\703800_S2.2.dwg Jul 18, 2014 - 1:47pm

REV. NO.	SHEET NO.	TOTAL SHEETS
----	----	----

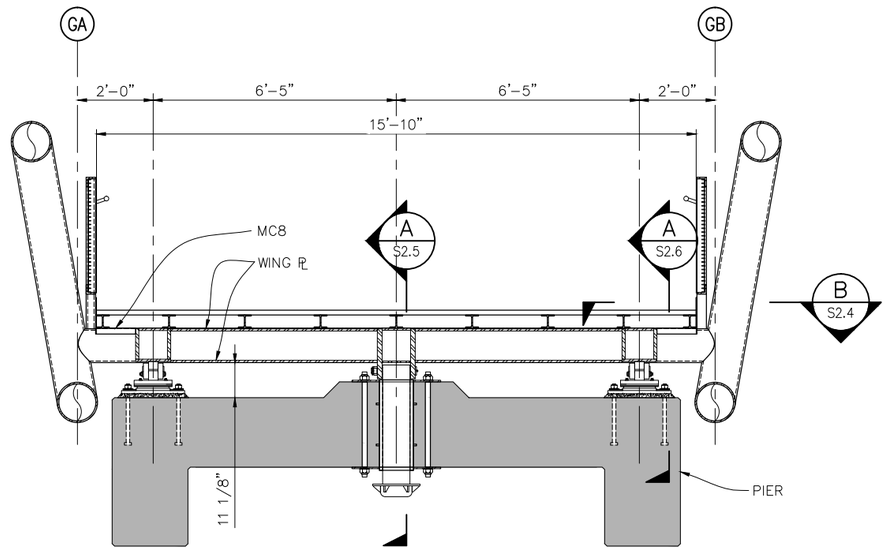

A S2.2 SECTION
SCALE: 1/2"=1'-0"

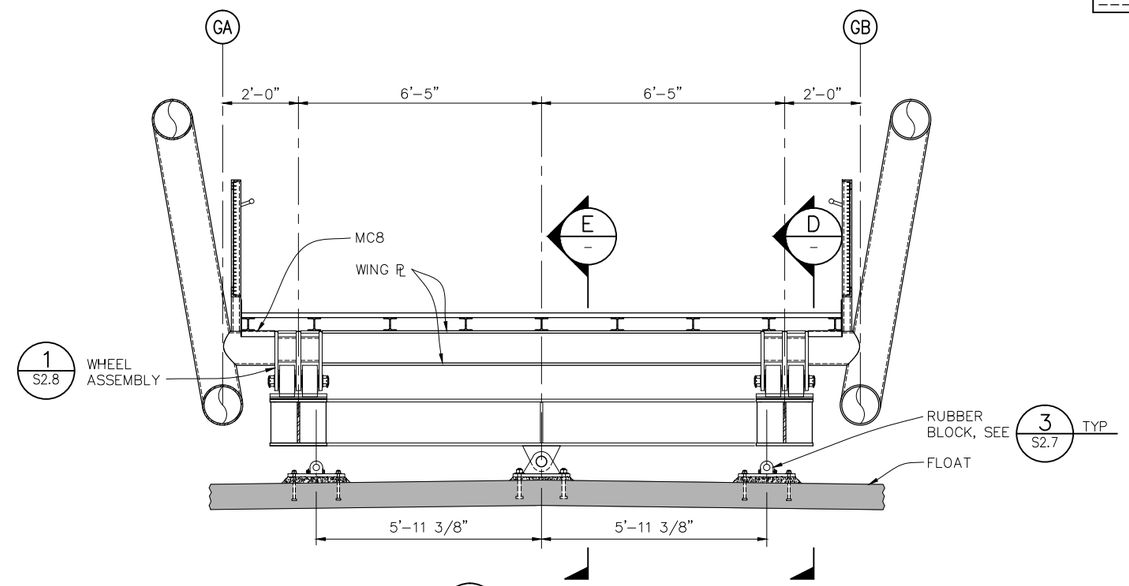

C S2.2 SECTION
SCALE: 1/2"=1'-0"

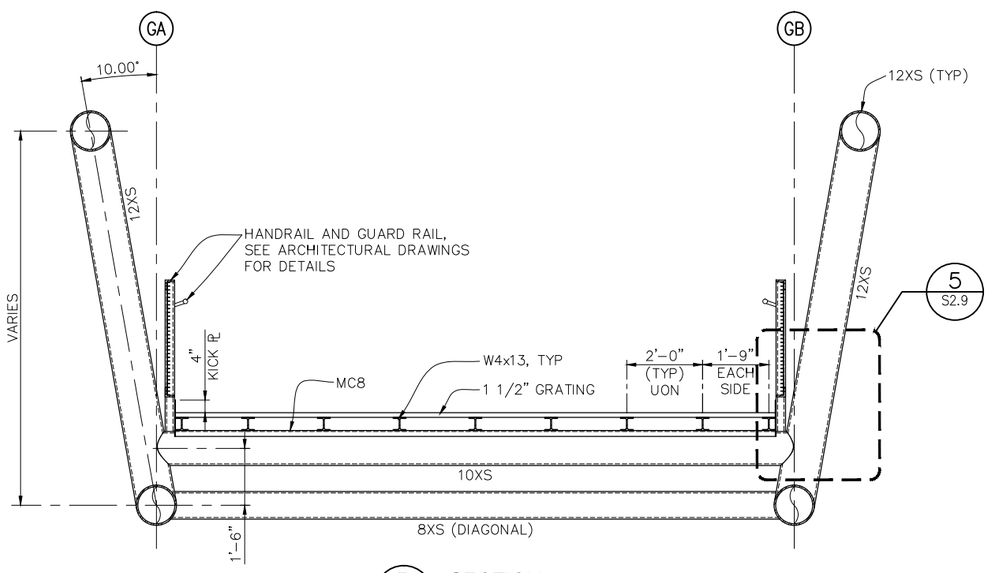

B S2.2 SECTION
SCALE: 1/2"=1'-0"

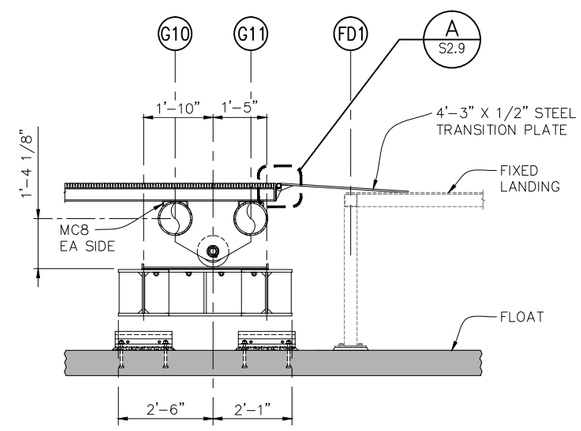

D - SECTION
SCALE: 1/2"=1'-0"

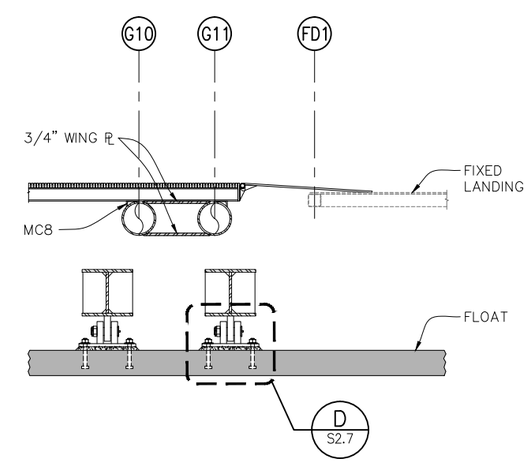

E - SECTION
SCALE: 1/2"=1'-0"

2'-0" 0'-0" 2'-0" 4'-0"
SCALE: 1/2"=1'-0"

P:\7038 GGBD Ferry Terminals\500 Cadd\560 Working\SAUSALITO\CADD\703800_S2.3.dwg Jul 18, 2014 - 1:47pm

DESIGN	BY EBD	CHECKED BJ	BO JENSEN PROJECT MANAGER
DRAWN	BY TE	CHECKED	
QUANTITIES	BY	CHECKED	

ORIGINAL SCALE IN INCHES FOR REDUCED PLANS 0 1 2 3

moffatt & nichol
2185 N. California Blvd., Suite 500
Walnut Creek, CA 94596

REGISTERED CIVIL ENGINEER
07/18/2014
PLANS APPROVAL DATE

NO.	REVISIONS	BY	DATE

CONTRACT NO. 2011-B-2
CADD FILE 703800_S2.3.dwg
DRAWING NO. S2.3

APPROVED BY
DISTRICT ENGINEER
DATE

PROJECT TITLE
GOLDEN GATE SAUSALITO FERRY TERMINAL IMPROVEMENTS

SHEET TITLE
GANGWAY SECTIONS

GOLDEN GATE BRIDGE HIGHWAY & TRANSPORTATION DISTRICT

REV. NO.	SHEET NO.	TOTAL SHEETS
----	----	----

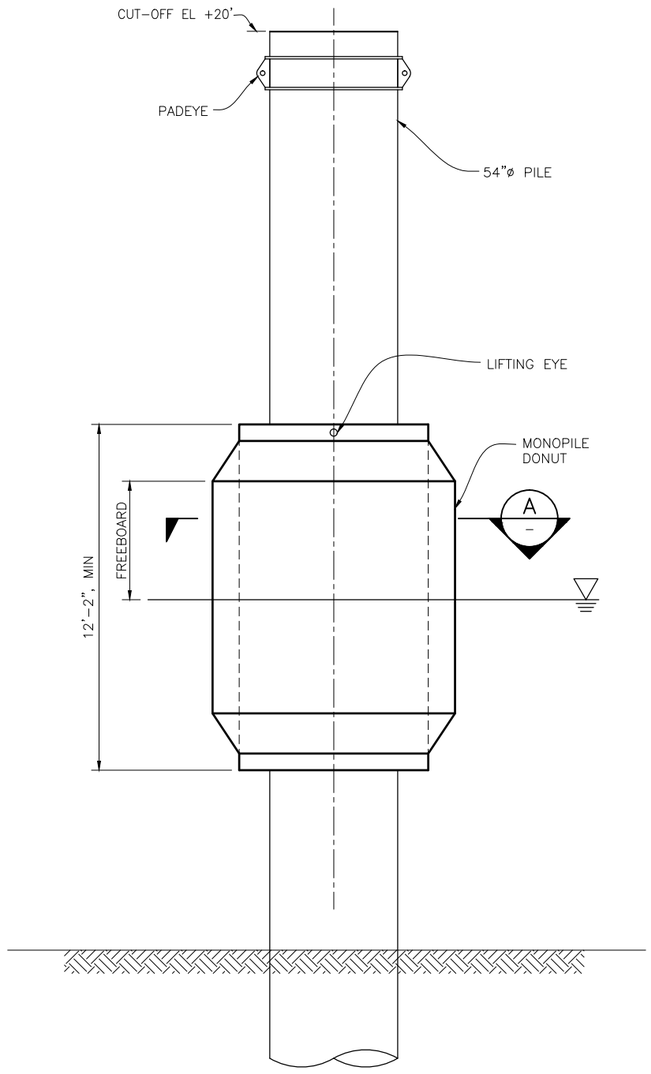

9 / S1.1 DETAIL – DONUT FENDER
SCALE: 3/8"=1'-0"

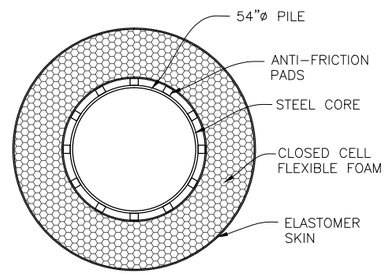

A / – SECTION
SCALE: 3/8"=1'-0"

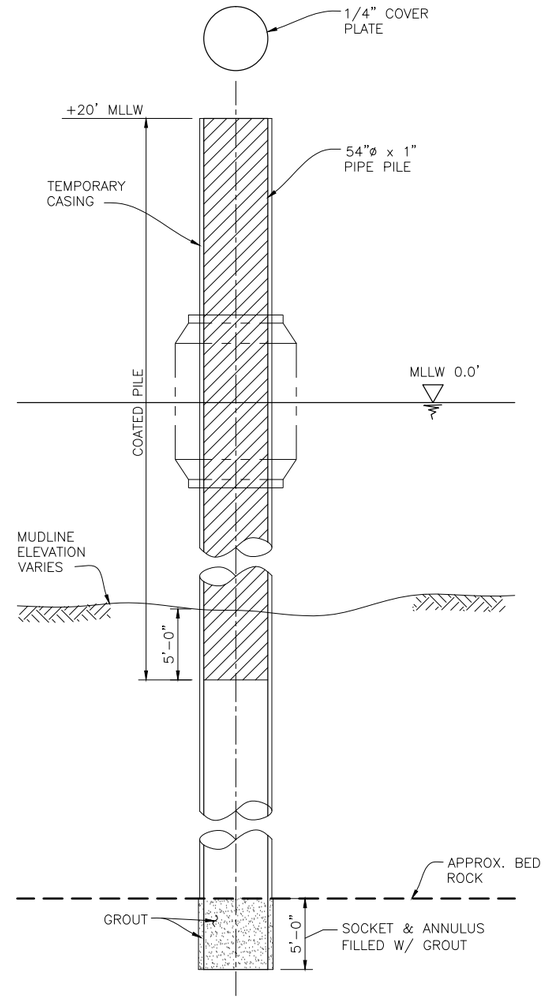

1 / – ELEVATION – DONUT FENDER PILE
SCALE: 3/16"=1'-0"

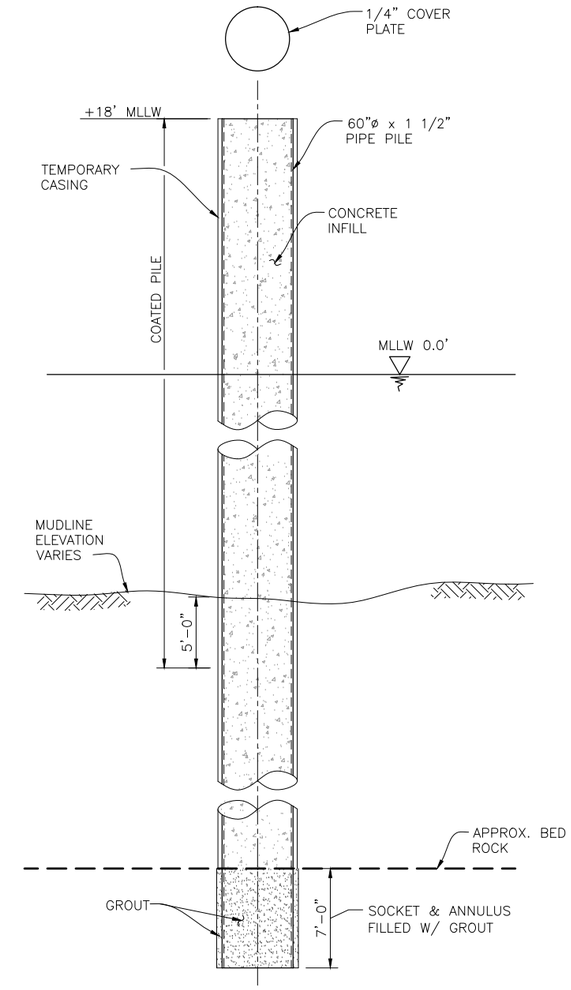

2 / – ELEVATION – GUIDE PILE
SCALE: 3/16"=1'-0"

4'-0" 0'-0" 2'-0" 4'-0"
SCALE: 3/8"=1'-0"

8'-0" 0'-0" 4'-0" 8'-0"
SCALE: 3/16"=1'-0"

DESIGN	BY AB	CHECKED BJ	BO JENSEN PROJECT MANAGER
DRAWN	BY AIB	CHECKED	
QUANTITIES	BY	CHECKED	

ORIGINAL SCALE IN INCHES FOR REDUCED PLANS 0 1 2 3

moffatt & nichol
2185 N. California Blvd., Suite 500
Walnut Creek, CA 94596

REGISTERED CIVIL ENGINEER
07/18/2014
PLANS APPROVAL DATE

NO.	REVISIONS	BY	DATE

CONTRACT NO. 2011-B-2
CADD FILE 703800_S3.2.dwg
DRAWING NO. S3.2

APPROVED BY
DISTRICT ENGINEER
DATE

PROJECT TITLE
GOLDEN GATE SAUSALITO FERRY TERMINAL IMPROVEMENTS

SHEET TITLE
GUIDE PILE & DONUT FENDER

GOLDEN GATE BRIDGE HIGHWAY & TRANSPORTATION DISTRICT

P:\7038 GGBD Ferry Terminals\500 Cadd\560 Working\SAUSALITO\CADD\703800_S3.2.dwg Jul 18, 2014 – 1:47pm

REV. NO.	SHEET NO.	TOTAL SHEETS
----	----	----

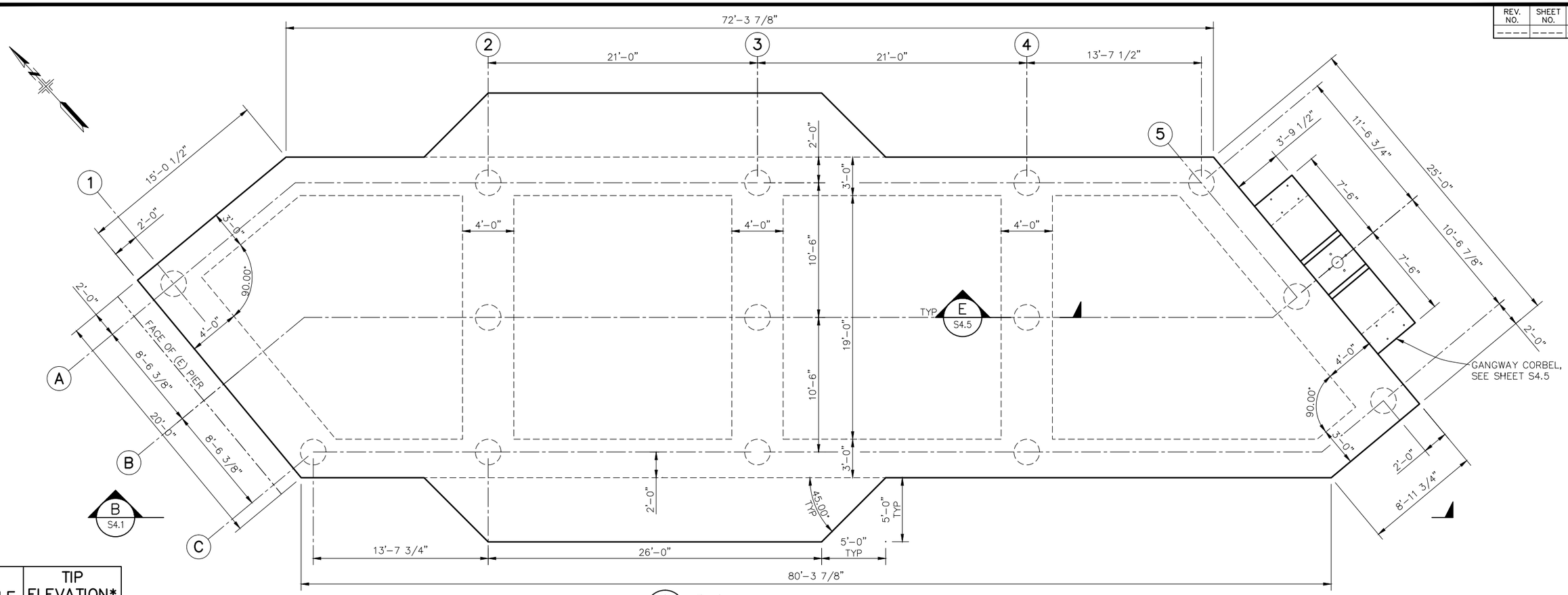

A S4.1 PLAN
SCALE: 1/4"=1'-0"

PILE	TIP ELEVATION* (ft)
1A	-65.00
1C	-65.00
2A	-65.00
2B	-65.00
2C	-65.00
3A	-65.00
3B	-65.00
3C	-65.00
4A	-65.00
4B	-65.00
4C	-65.00
5A	-65.00
5B	-65.00
5C	-65.00

*DRIVE PILES TO THE TOP OF BEDROCK. BEDROCK ELEVATION TO BE FIELD VERIFIED.

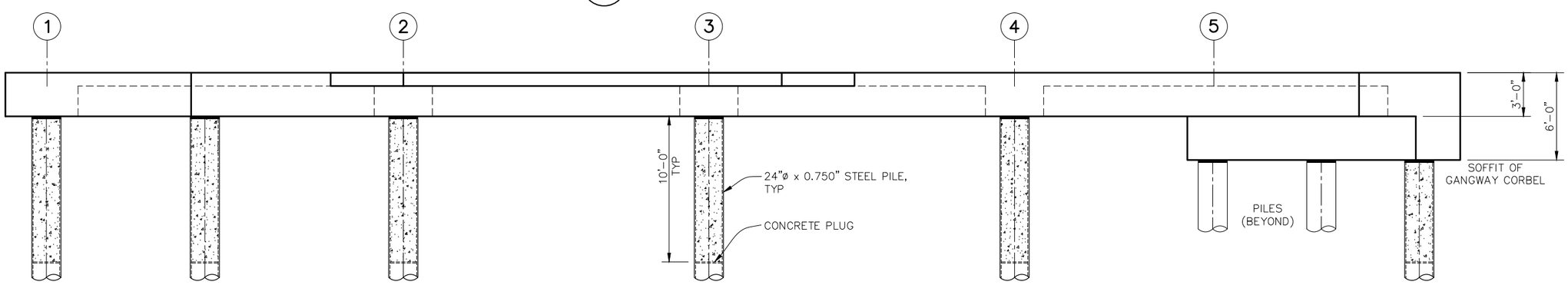

B S4.1 ELEVATION
SCALE: 1/4"=1'-0"

4'-0" 0'-0" 4'-0" 8'-0"
SCALE: 1/4"=1'-0"

DESIGN	BY GD	CHECKED BJ	BO JENSEN PROJECT MANAGER
DRAWN	BY TE	CHECKED	
QUANTITIES	BY	CHECKED	

ORIGINAL SCALE IN INCHES FOR REDUCED PLANS 0 1 2 3

moffatt & nichol
2185 N. California Blvd., Suite 500
Walnut Creek, CA 94596

REGISTERED CIVIL ENGINEER
07/18/2014
PLANS APPROVAL DATE

NO.	REVISIONS	BY	DATE

CONTRACT NO. 2011-B-2
CADD FILE 703800_S4.1.dwg
DRAWING NO. S4.1

APPROVED BY
DISTRICT ENGINEER
DATE

PROJECT TITLE
GOLDEN GATE SAUSALITO FERRY TERMINAL IMPROVEMENTS

SHEET TITLE
PIER EXTENSION PLAN & ELEVATION

GOLDEN GATE BRIDGE HIGHWAY & TRANSPORTATION DISTRICT

P:\7038 GGBD Ferry Terminals\500 Cadd\560 Working\SAUSALITO\CADD\703800_S4.1.dwg Jul 18, 2014 - 1:47pm

REV. NO.	SHEET NO.	TOTAL SHEETS
-----	-----	-----

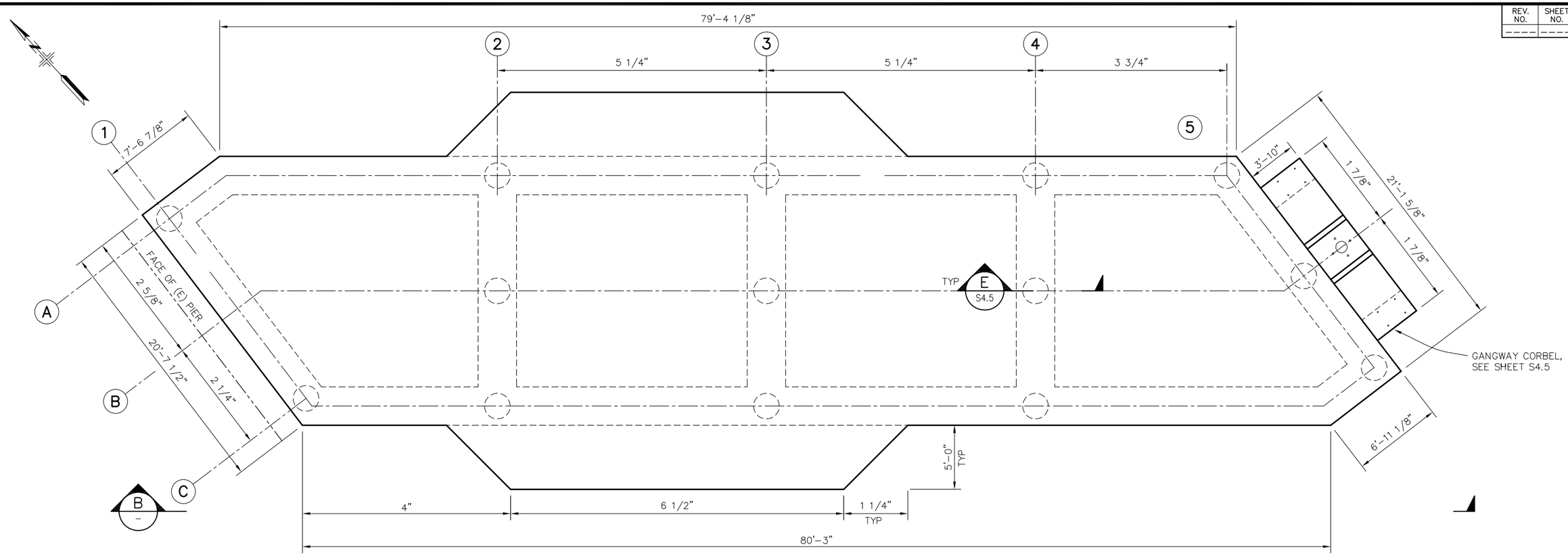

PILE	TIP ELEVATION* (ft)
1A	-65.00
1C	-65.00
2A	-65.00
2B	-65.00
2C	-65.00
3A	-65.00
3B	-65.00
3C	-65.00
4A	-65.00
4B	-65.00
4C	-65.00
5A	-65.00
5B	-65.00
5C	-65.00

*DRIVE PILES TO THE TOP OF BEDROCK. BEDROCK ELEVATION TO BE FIELD VERIFIED.

A / - PLAN
SCALE: 1/4"=1'-0"

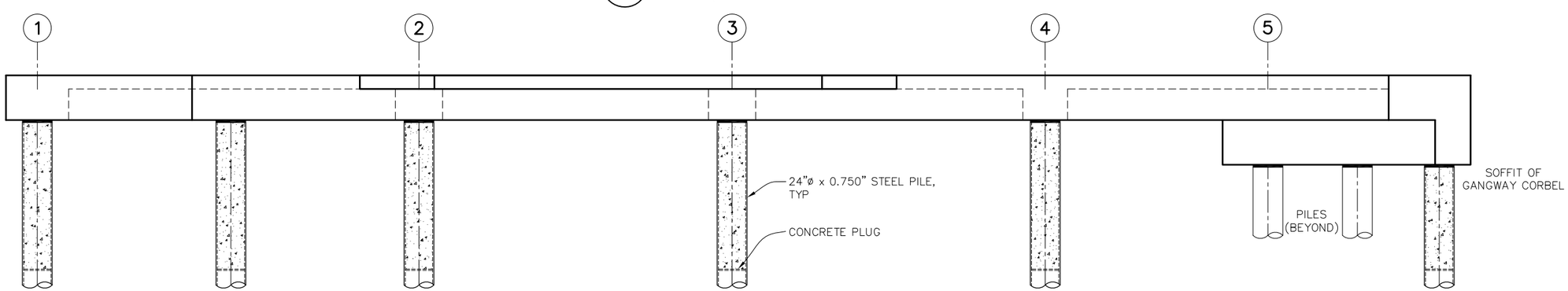

B / - ELEVATION
SCALE: 1/4"=1'-0"

4'-0" 0'-0" 4'-0" 8'-0"
SCALE: 1/4"=1'-0"

DESIGN	BY GD	CHECKED BJ	BO JENSEN PROJECT MANAGER
DRAWN	BY TE	CHECKED	
QUANTITIES	BY	CHECKED	

ORIGINAL SCALE IN INCHES FOR REDUCED PLANS 0 1 2 3

moffatt & nichol
2185 N. California Blvd., Suite 500
Walnut Creek, CA 94596

REGISTERED CIVIL ENGINEER
07/18/2014
PLANS APPROVAL DATE

NO.	REVISIONS	BY	DATE

CONTRACT NO. 2011-B-2
CADD FILE 703800_S4.10.dwg
DRAWING NO. S4.10

APPROVED BY
DISTRICT ENGINEER
DATE

PROJECT TITLE
GOLDEN GATE SAUSALITO FERRY TERMINAL IMPROVEMENTS

SHEET TITLE
PIER EXTENSION PLAN & ELEVATION

GOLDEN GATE BRIDGE HIGHWAY & TRANSPORTATION DISTRICT

P:\7038 GGBD Ferry Terminals\500 Cadd\560 Working\SAUSALITO\CADD\703800_S4.10.dwg Feb 25, 2015 - 11:17am

REV. NO.	SHEET NO.	TOTAL SHEETS
----	----	----

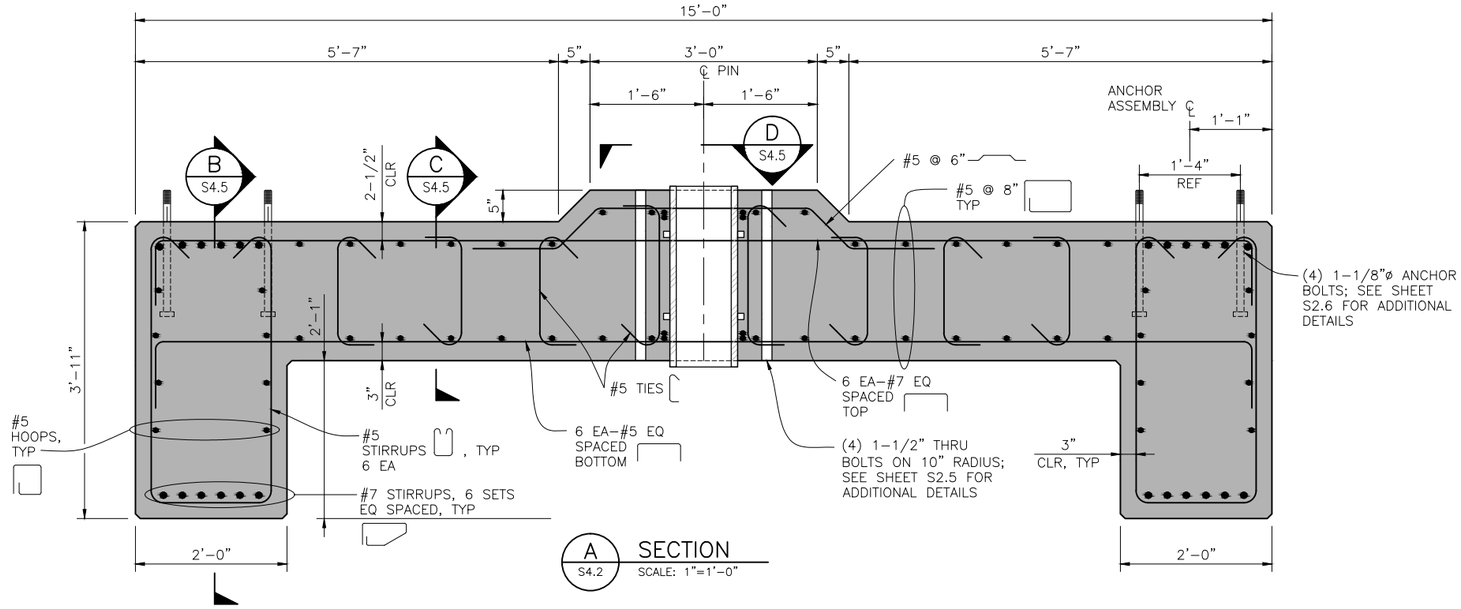

A S4.2 SECTION
SCALE: 1"=1'-0"

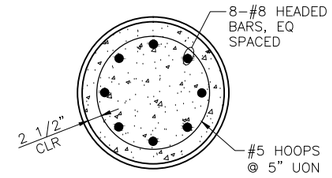

F S4.5 SECTION
SCALE: 1"=1'-0"

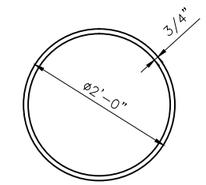

G S4.5 SECTION
SCALE: 1"=1'-0"

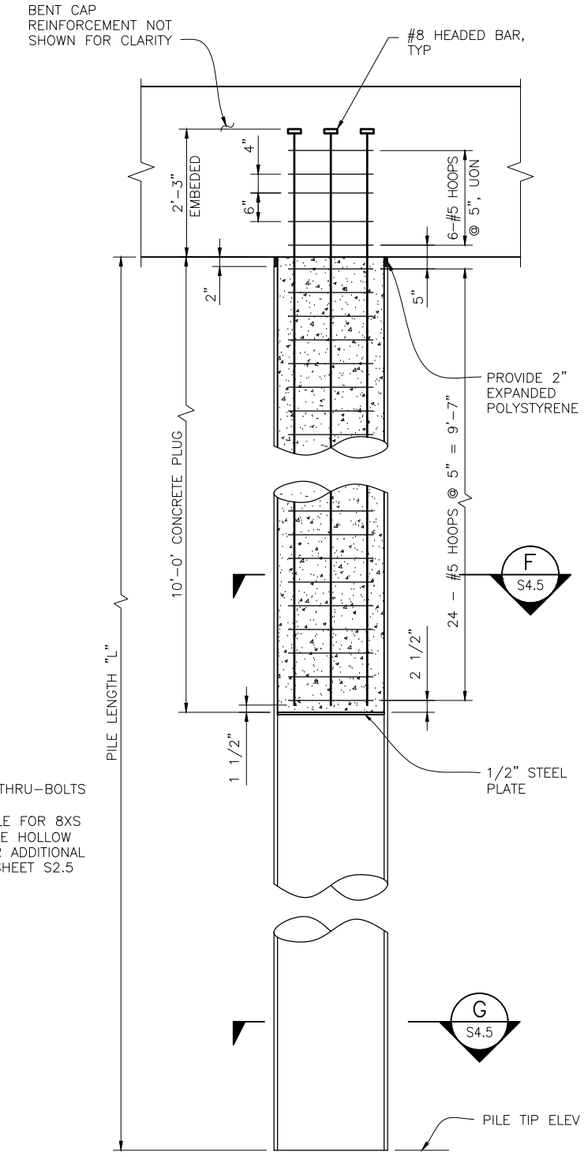

E S4.1 SECTION
SCALE: 3/4"=1'-0"

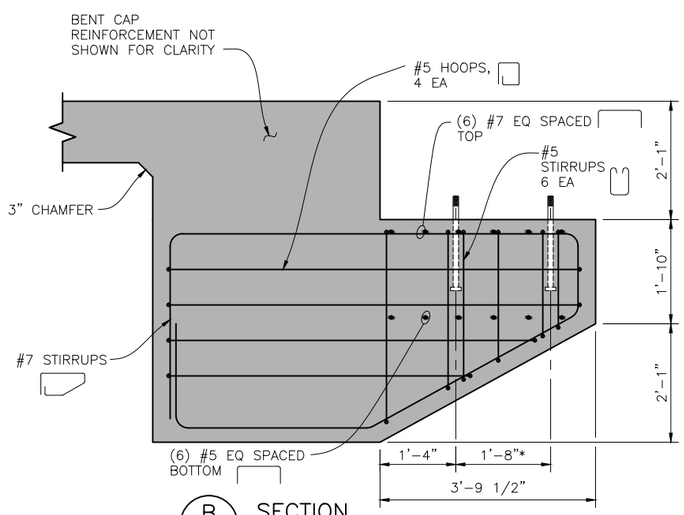

B S4.5 SECTION
SCALE: 3/4"=1'-0"

*NOTE: (4) 1-1/8"ø x 20" LONG ASTM F1554 GR 105 ANCHOR BOLTS (MIN 15" EMBEDMENT)

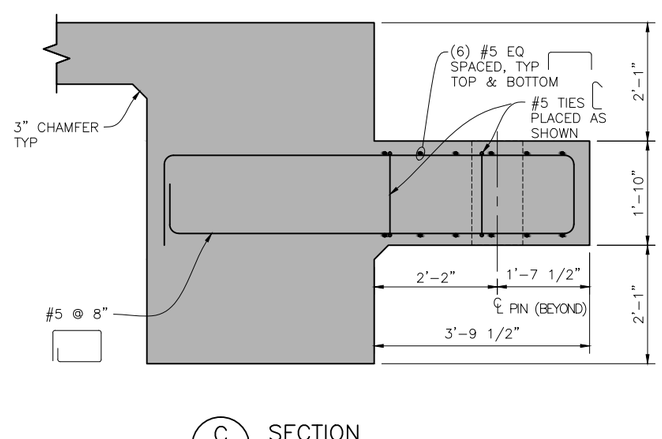

C S4.5 SECTION
SCALE: 3/4"=1'-0"

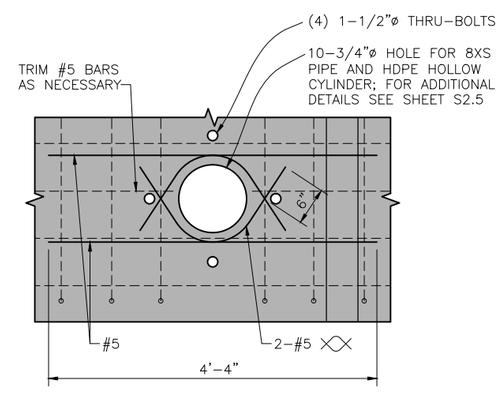

D S4.5 SECTION
SCALE: 1"=1'-0"

1'-0" 0'-0" 1'-0" 2'-0"
SCALE: 1"=1'-0"

2'-0" 0'-0" 1'-0" 2'-0"
SCALE: 3/4"=1'-0"

DESIGN	BY GD	CHECKED BJ	BO JENSEN PROJECT MANAGER
DRAWN	BY AIB/TE	CHECKED	
QUANTITIES	BY	CHECKED	

ORIGINAL SCALE IN INCHES FOR REDUCED PLANS 0 1 2 3

moffatt & nichol
2185 N. California Blvd., Suite 500
Walnut Creek, CA 94596

REGISTERED CIVIL ENGINEER
07/18/2014
PLANS APPROVAL DATE

NO.	REVISIONS	BY	DATE

CONTRACT NO. 2011-B-2
CADD FILE 703800_S4.5.dwg
DRAWING NO. S4.5

APPROVED BY
DISTRICT ENGINEER
DATE

PROJECT TITLE
GOLDEN GATE SAUSALITO FERRY TERMINAL IMPROVEMENTS

SHEET TITLE
PIER EXTENSION CORBEL REINFORCEMENT & PILE DETAILS

GOLDEN GATE BRIDGE HIGHWAY & TRANSPORTATION DISTRICT

P:\7038 GGBD Ferry Terminals\500 Cadd\560 Working\SAUSALITO\CADD\703800_S4.5.dwg Jul 18, 2014 - 1:47pm

REV. NO.	SHEET NO.	TOTAL SHEETS

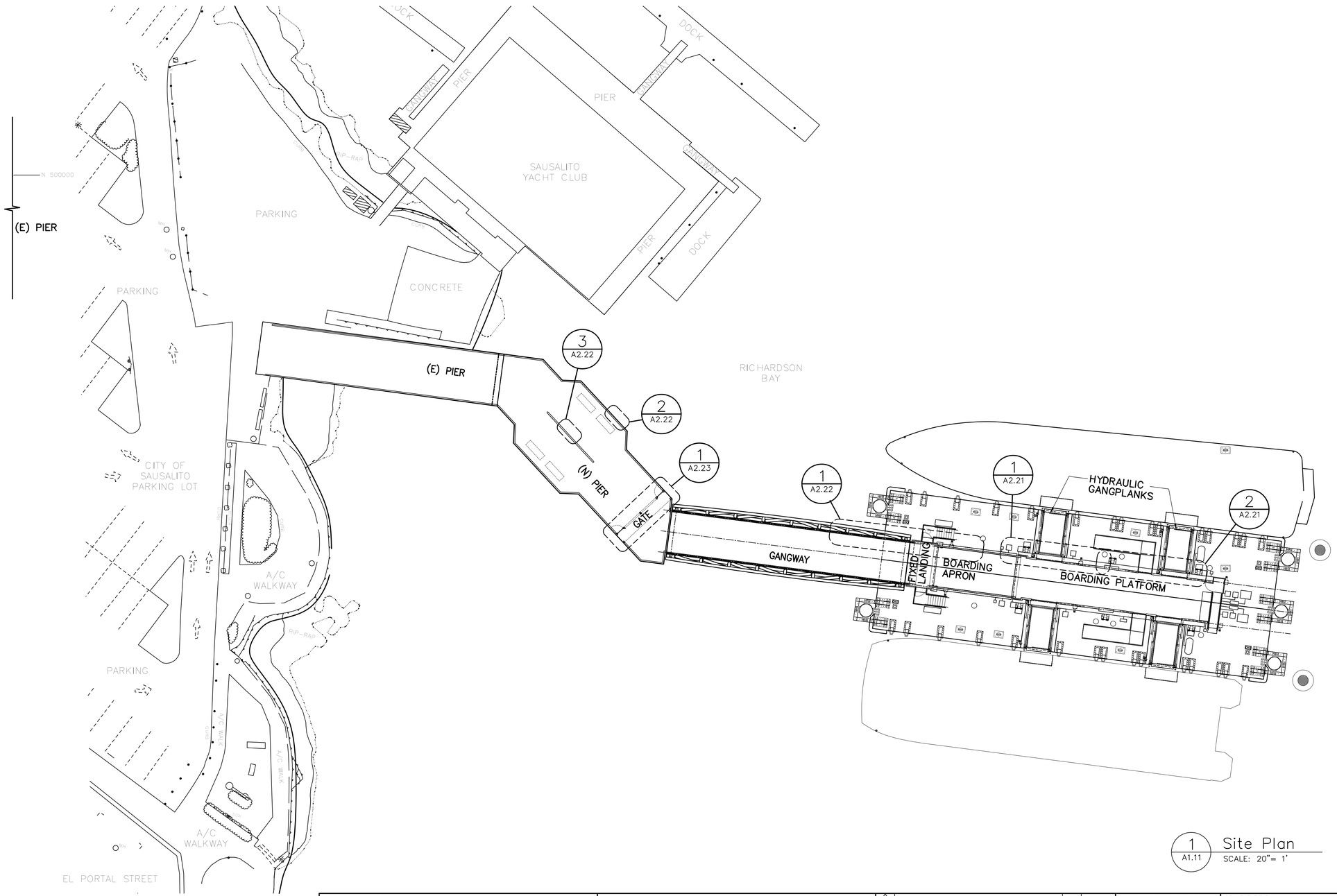

1 A1.11 Site Plan
SCALE: 20"= 1'

20'-0" 0'-0" 20'-0" 40'-0"
SCALE: 1"=20'

T:\090900 (GGFerry)\00 Drawings & Specifications\Drawings\00 Current\A1.11.dwg Jul 17, 2014 – 3:22pm

DESIGN	BY	CHECKED	ROBERT JANSEN PROJECT MANAGER
DETAILS	BY	CHECKED	
QUANTITIES	BY	CHECKED	

ORIGINAL SCALE IN INCHES FOR REDUCED PLANS 0 1 2 3

KH KwanHenmi
456 Montgomery st. Suite 300
San Francisco, CA 94104

REGISTERED ARCHITECT

PLANS APPROVAL DATE

moffatt & nichol
2185 N. California Blvd., Suite 500
Walnut Creek, CA 94596

REGISTERED CIVIL ENGINEER

PLANS APPROVAL DATE

NO.	REVISIONS	BY	DATE

CONTRACT NO. 2011-B-2
CADD FILE
DRAWING NO. A1.11

APPROVED BY

DISTRICT ENGINEER

DATE

PROJECT TITLE
GOLDEN GATE SAUSALITO FERRY TERMINAL IMPROVEMENTS

SHEET TITLE
SITE PLAN

GOLDEN GATE BRIDGE HIGHWAY & TRANSPORTATION DISTRICT

REV. NO.	SHEET NO.	TOTAL SHEETS

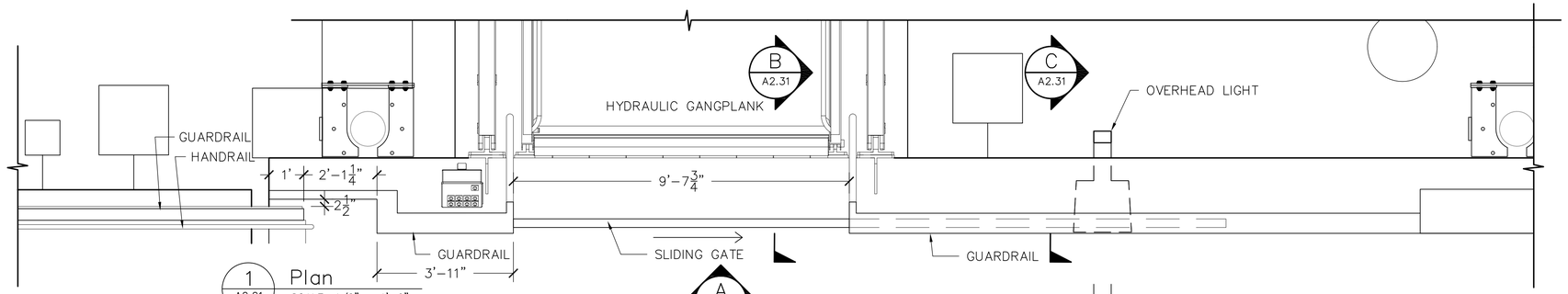

1 A2.21 Plan
SCALE: 1/2" = 1'-0"

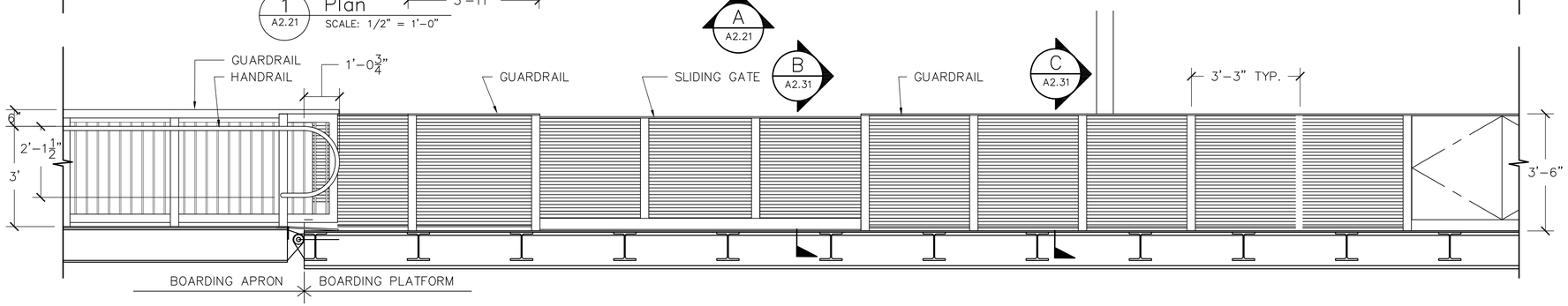

A A2.21 Elevation
SCALE: 1/2" = 1'-0"

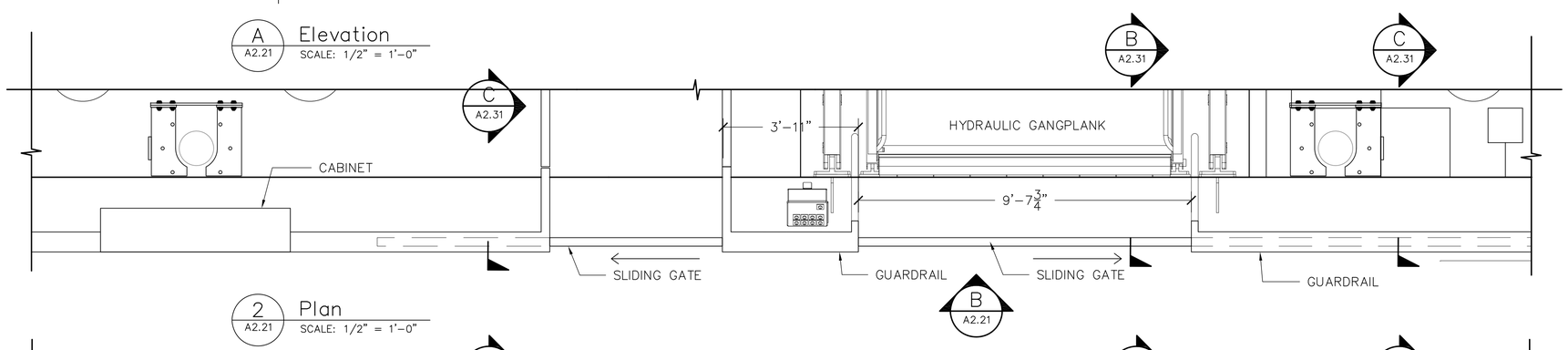

2 A2.21 Plan
SCALE: 1/2" = 1'-0"

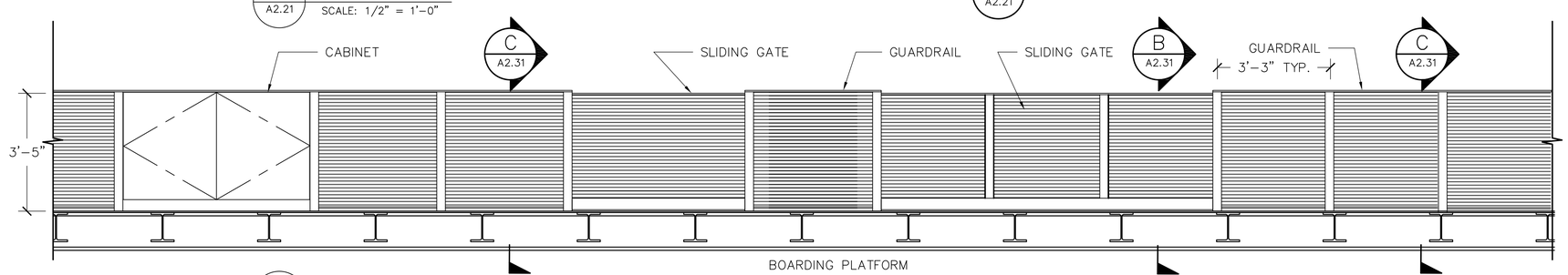

B A2.21 Elevation
SCALE: 1/2" = 1'-0"

2'-0" 0'-0" 2'-0" 4'-0"
SCALE: 1/2"=1'-0"

DESIGN	BY	CHECKED	ROBERT JANSEN PROJECT MANAGER
DETAILS	BY	CHECKED	
QUANTITIES	BY	CHECKED	

ORIGINAL SCALE IN INCHES FOR REDUCED PLANS 0 1 2 3

KwanHenmi
456 Montgomery st. Suite 300
San Francisco, CA 94104
REGISTERED ARCHITECT
PLANS APPROVAL DATE

moffatt & nichol
2185 N. California Blvd., Suite 500
Walnut Creek, CA 94596
REGISTERED CIVIL ENGINEER
PLANS APPROVAL DATE

NO.	REVISIONS	BY	DATE

CONTRACT NO. 2011-B-2
CADD FILE
DRAWING NO. A2.21

APPROVED BY
DISTRICT ENGINEER
DATE

PROJECT TITLE
GOLDEN GATE SAUSALITO FERRY TERMINAL IMPROVEMENTS

SHEET TITLE
GUARDRAILS
ENLARGED ELEVATIONS/PLANS

GOLDEN GATE BRIDGE
HIGHWAY & TRANSPORTATION DISTRICT

T:\090900 (GGFerry)\00 Drawings & Specifications\Drawings\00 Current\A2.21-22.dwg Jul 17, 2014 - 3:32pm

REV. NO.	SHEET NO.	TOTAL SHEETS

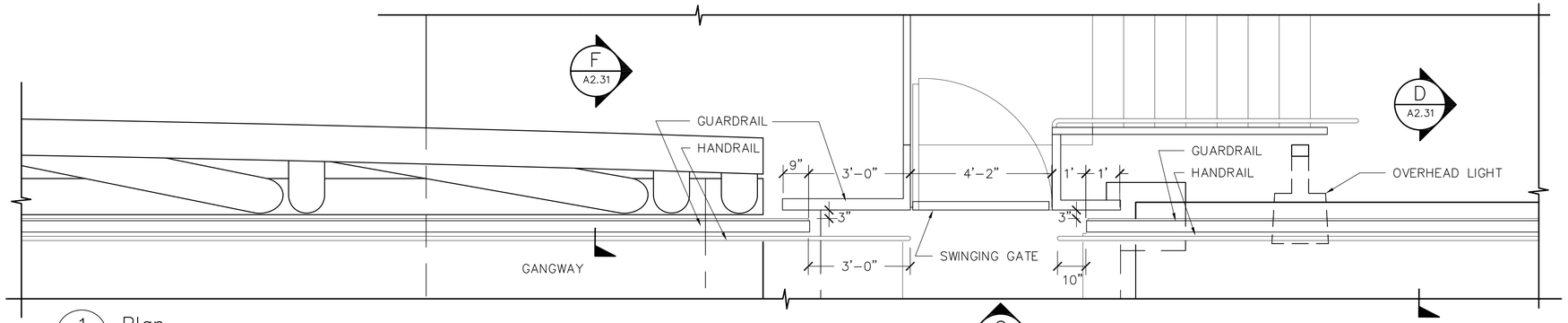

1 A2.22 Plan
SCALE: 1/2" = 1'-0"

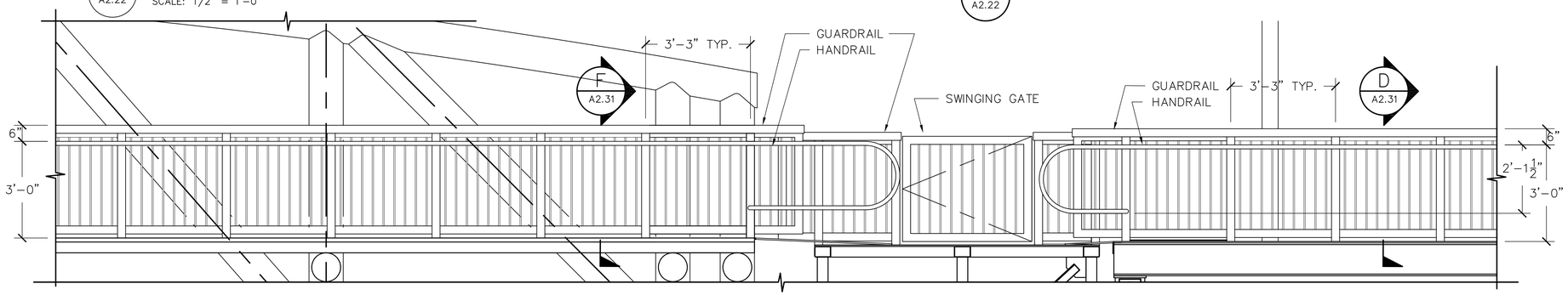

A A2.22 Elevation
SCALE: 1/2" = 1'-0"

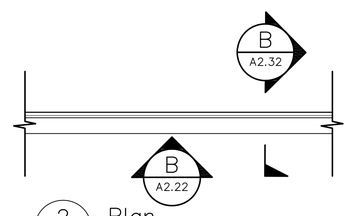

2 A2.22 Plan
SCALE: 1/2" = 1'-0"

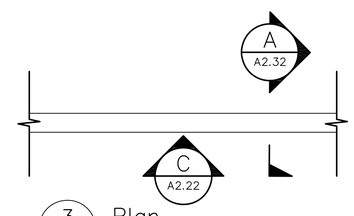

3 A2.22 Plan
SCALE: 1/2" = 1'-0"

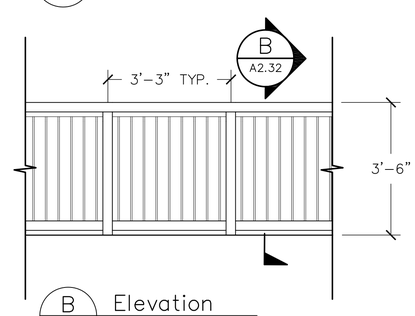

B A2.22 Elevation
SCALE: 1/2" = 1'-0"

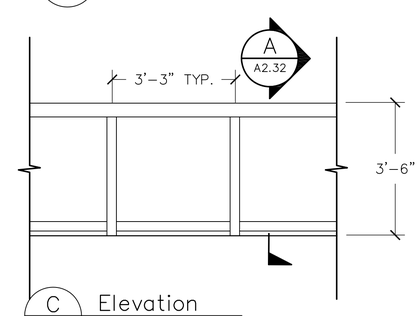

C A2.22 Elevation
SCALE: 1/2" = 1'-0"

2'-0" 0'-0" 2'-0" 4'-0"
SCALE: 1/2"=1'-0"

DESIGN	BY	CHECKED	ROBERT JANSEN PROJECT MANAGER
DETAILS	BY	CHECKED	
QUANTITIES	BY	CHECKED	

ORIGINAL SCALE IN INCHES FOR REDUCED PLANS 0 1 2 3

KwanHenmi
456 Montgomery st. Suite 300
San Francisco, CA 94104

REGISTERED ARCHITECT

PLANS APPROVAL DATE

moffatt & nichol
2185 N. California Blvd., Suite 500
Walnut Creek, CA 94596

REGISTERED CIVIL ENGINEER

PLANS APPROVAL DATE

NO.	REVISIONS	BY	DATE

CONTRACT NO. 2011-B-2
CADD FILE
DRAWING NO. A2.22

APPROVED BY
DISTRICT ENGINEER
DATE

PROJECT TITLE
GOLDEN GATE SAUSALITO FERRY TERMINAL IMPROVEMENTS

SHEET TITLE
GUARDRAILS
ENLARGED ELEVATIONS/PLANS

GOLDEN GATE BRIDGE
HIGHWAY & TRANSPORTATION DISTRICT

T:\090900 (GGFerry)\00 Drawings & Specifications\Drawings\00 Current\A2.21-22.dwg Jul 17, 2014 - 3:32pm

REV. NO.	SHEET NO.	TOTAL SHEETS

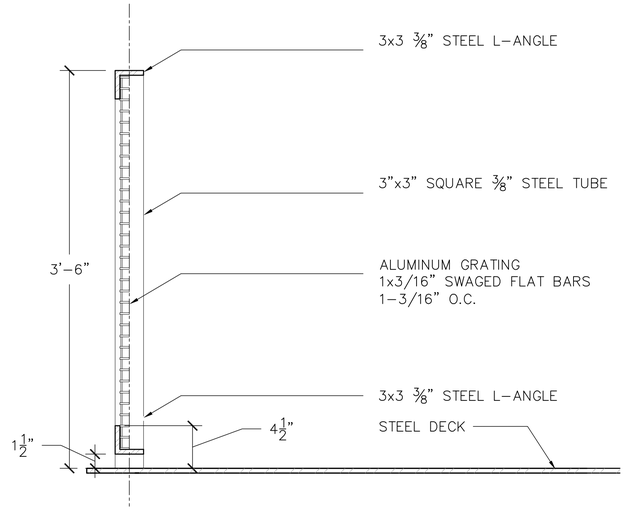

A / A2.31 Boarding Platform Section Detail
SCALE: 1-1/2" = 1'-0"

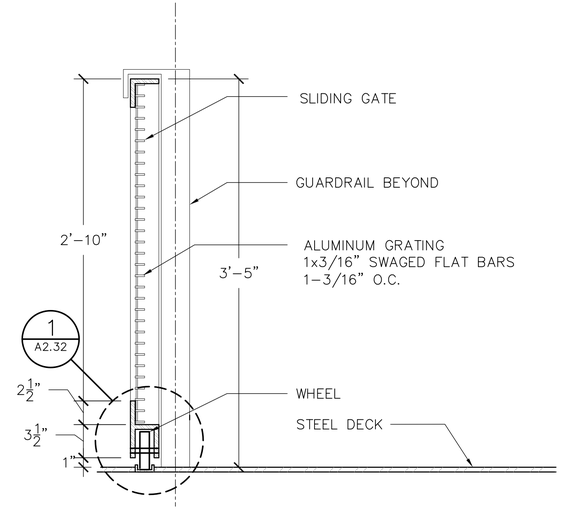

B / A2.31 Boarding Platform Section Detail at Sliding Gate
SCALE: 1-1/2" = 1'-0"

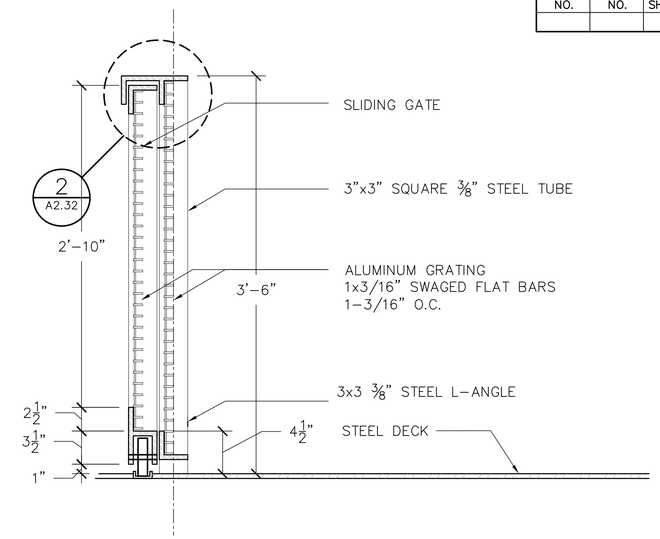

C / A2.31 Composite Boarding Platform Section Detail
SCALE: 1-1/2" = 1'-0"

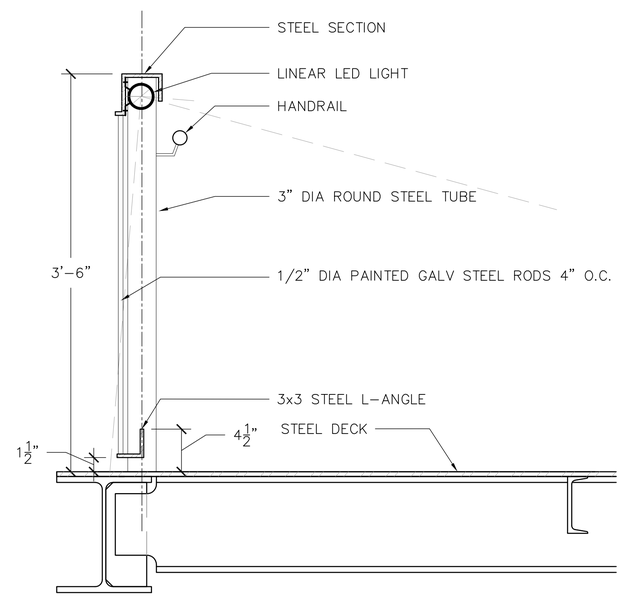

D / A2.31 Boarding Apron Section Detail
SCALE: 1-1/2" = 1'-0"

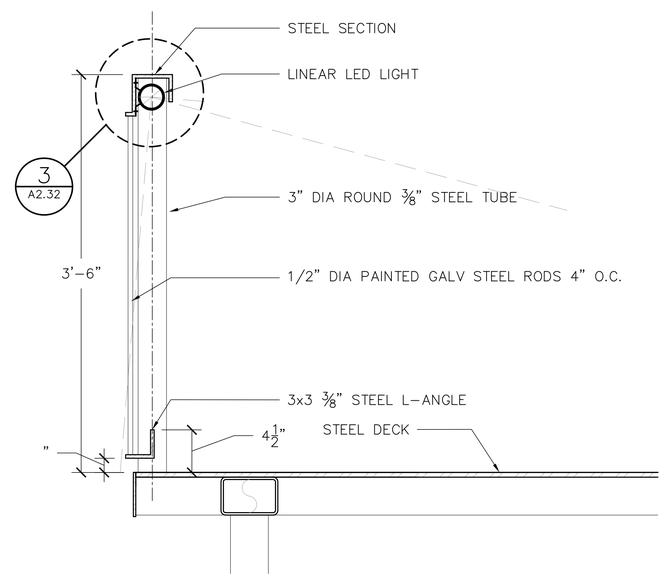

E / A2.31 Fixed Landing Section Detail
SCALE: 1-1/2" = 1'-0"

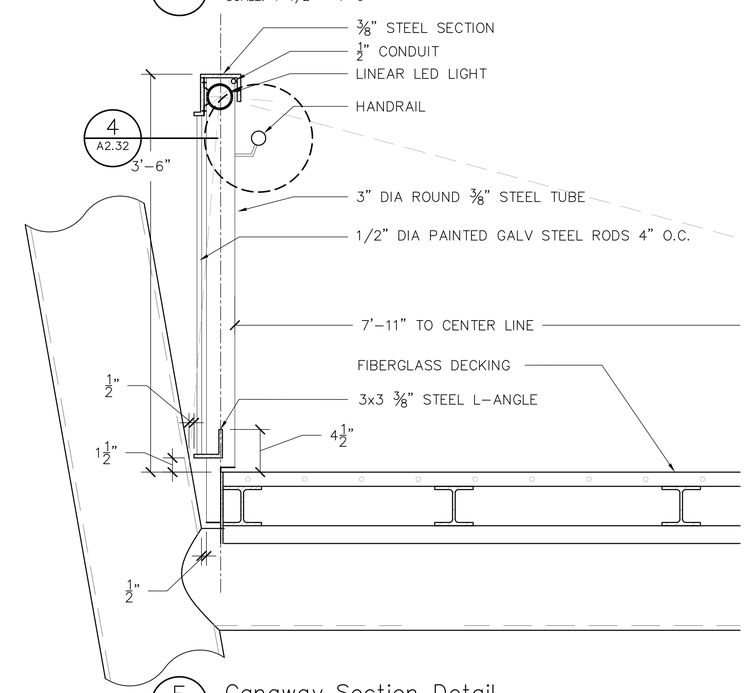

F / A2.31 Gangway Section Detail
SCALE: 1-1/2" = 1'-0"

T:\090900 (GGFerry)\00 Drawings & Specifications\Drawings\00 Current\A2.31-32.dwg Jul 17, 2014 - 3:38pm

DESIGN	BY	CHECKED	ROBERT JANSEN PROJECT MANAGER
DETAILS	BY	CHECKED	
QUANTITIES	BY	CHECKED	

ORIGINAL SCALE IN INCHES FOR REDUCED PLANS 0 1 2 3

KwanHenmi
456 Montgomery st. Suite 300
San Francisco, CA 94104

REGISTERED ARCHITECT

PLANS APPROVAL DATE

moffatt & nichol
2185 N. California Blvd., Suite 500
Walnut Creek, CA 94596

REGISTERED CIVIL ENGINEER

PLANS APPROVAL DATE

NO.	REVISIONS	BY	DATE

CONTRACT NO. 2011-B-2
CADD FILE
DRAWING NO. A2.31

APPROVED BY

DISTRICT ENGINEER

DATE

PROJECT TITLE
GOLDEN GATE SAUSALITO FERRY TERMINAL IMPROVEMENTS

SHEET TITLE
GUARDRAILS SECTIONS

GOLDEN GATE BRIDGE
HIGHWAY & TRANSPORTATION DISTRICT

REV. NO.	SHEET NO.	TOTAL SHEETS

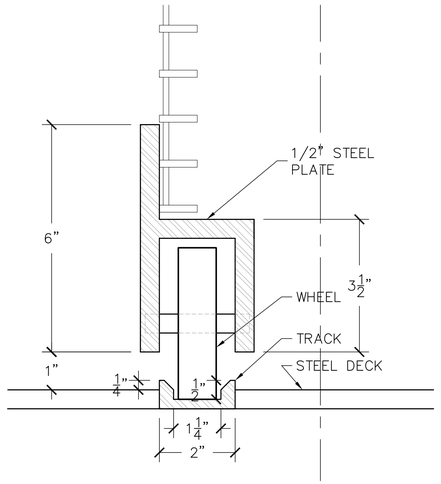

1 A2.32 Section Detail
SCALE: 6" = 1'-0"

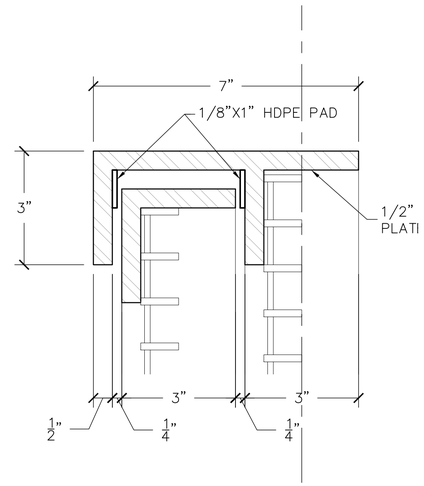

2 A2.32 Boarding Platform Section Detail at Sliding Gate
SCALE: 6" = 1'-0"

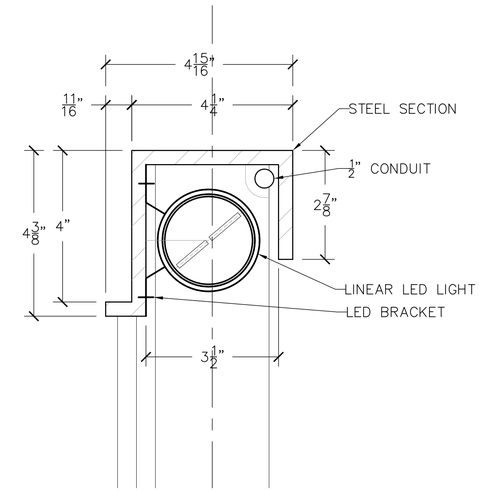

3 A2.32 LED & Rail Cap
SCALE: 6" = 1'-0"

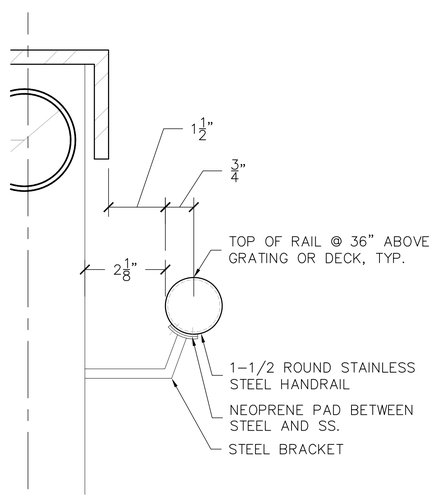

4 A2.32 Handrail Detail
SCALE: 6" = 1'-0"

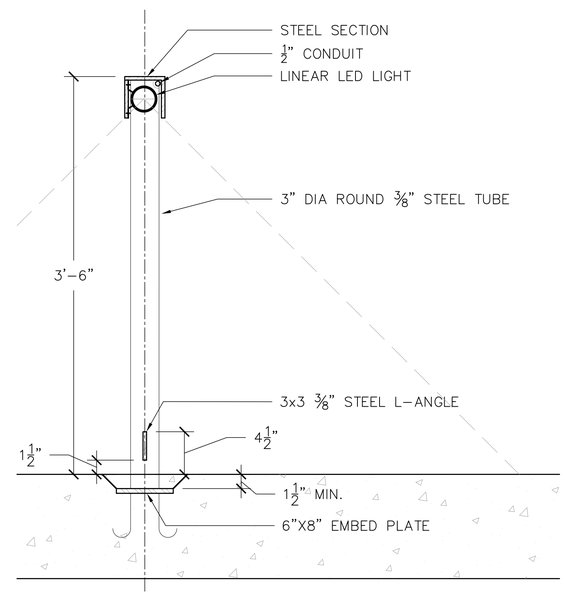

A A2.32 Pier Extension Mid Section Detail
SCALE: 1-1/2" = 1'-0"

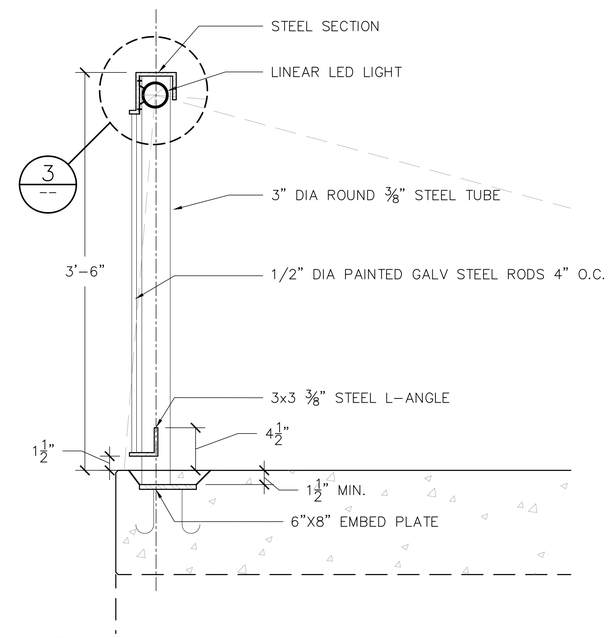

B A2.32 Pier Extension Edge Section Detail
SCALE: 1-1/2" = 1'-0"

T:\090900 (GGFerry)\00 Drawings & Specifications\Drawings\00 Current\A2.31-32.dwg Jul 17, 2014 - 3:38pm

DESIGN	BY	CHECKED	ROBERT JANSEN PROJECT MANAGER
DETAILS	BY	CHECKED	
QUANTITIES	BY	CHECKED	

ORIGINAL SCALE IN INCHES FOR REDUCED PLANS 0 1 2 3

KwanHenmi
456 Montgomery st. Suite 300
San Francisco, CA 94104
REGISTERED ARCHITECT
PLANS APPROVAL DATE

moffatt & nichol
2185 N. California Blvd., Suite 500
Walnut Creek, CA 94596
REGISTERED CIVIL ENGINEER
PLANS APPROVAL DATE

NO.	REVISIONS	BY	DATE

CONTRACT NO. 2011-B-2
CADD FILE
DRAWING NO. A2.32

APPROVED BY
DISTRICT ENGINEER
DATE

PROJECT TITLE
GOLDEN GATE SAUSALITO FERRY TERMINAL IMPROVEMENTS

SHEET TITLE
GUARDRAILS SECTIONS

GOLDEN GATE BRIDGE HIGHWAY & TRANSPORTATION DISTRICT

REV. NO.	SHEET NO.	TOTAL SHEETS

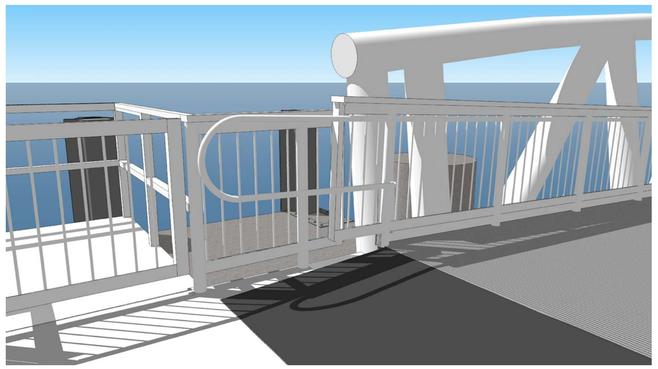

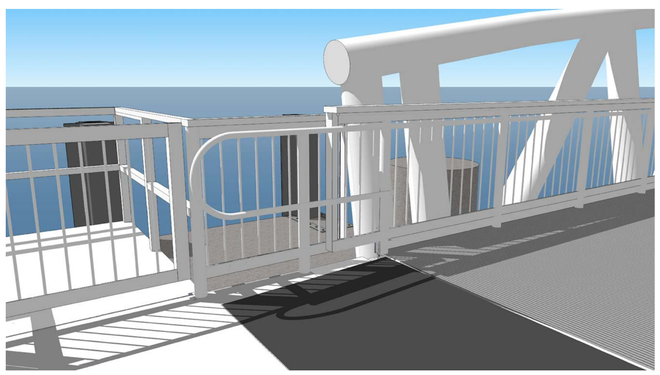

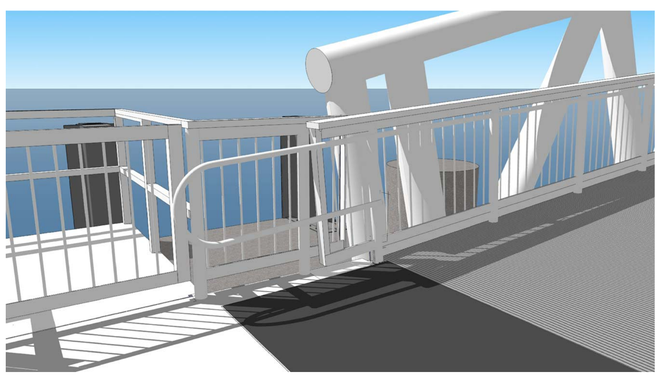

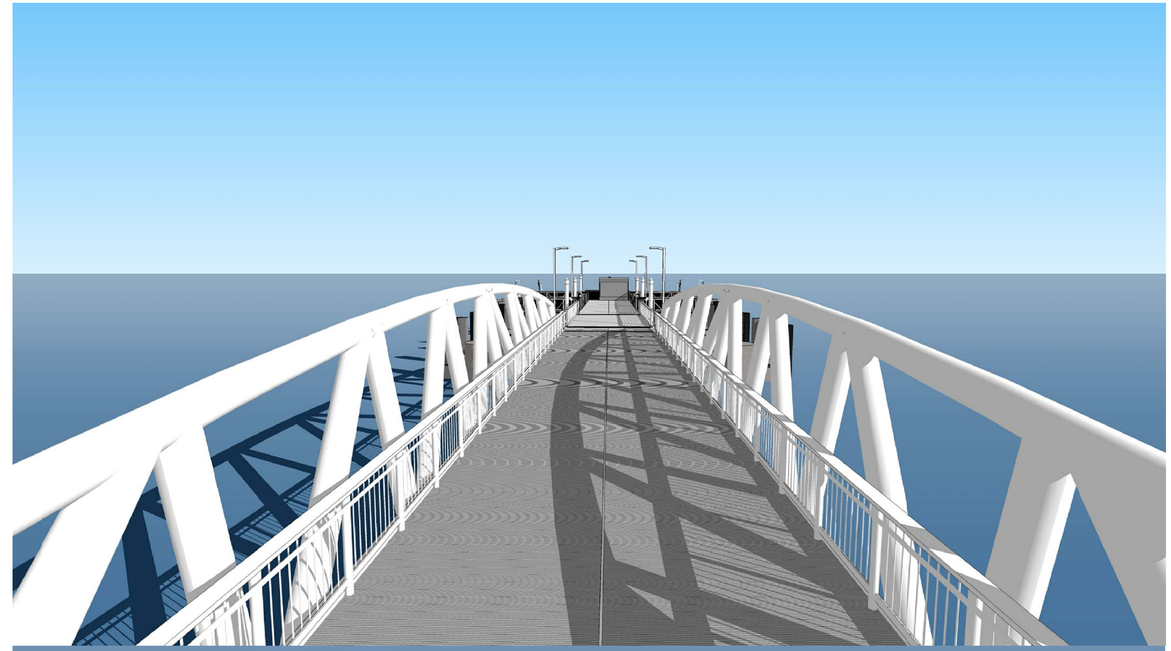

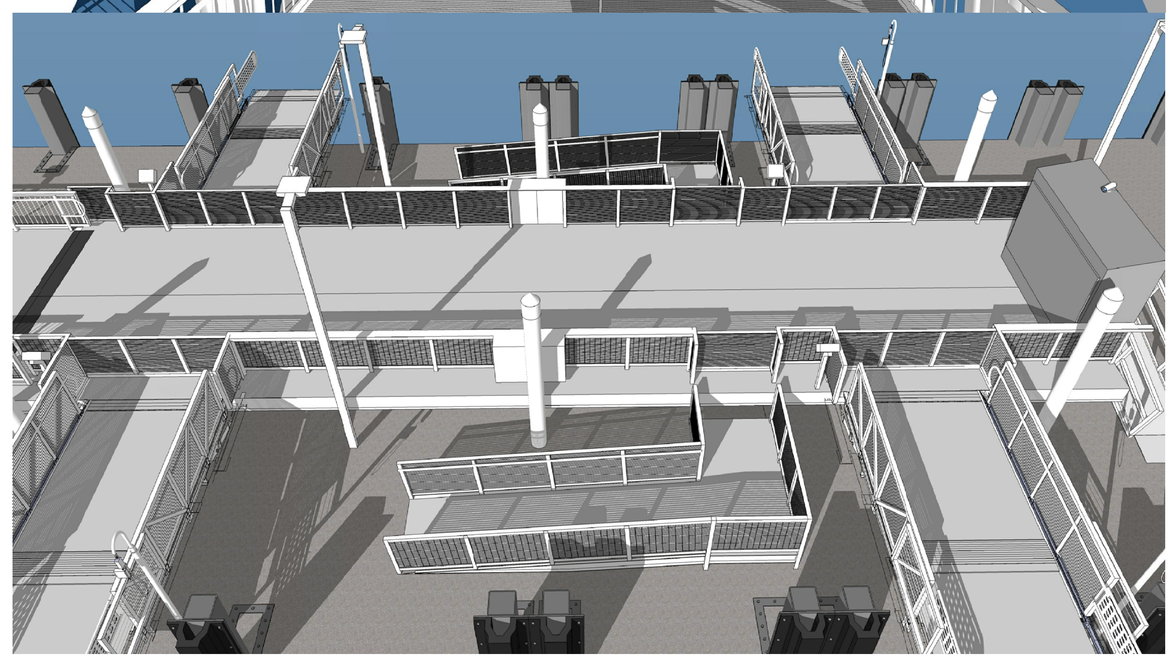

T:\090900 (GGFerry)\00 Drawings & Specifications\Drawings\00 Current\A3.11.dwg Jul 17, 2014 – 3:42pm

DESIGN	BY	CHECKED	ROBERT JANSEN PROJECT MANAGER
DETAILS	BY	CHECKED	
QUANTITIES	BY	CHECKED	

ORIGINAL SCALE IN INCHES FOR REDUCED PLANS 0 1 2 3

KH KwanHenmi
456 Montgomery st. Suite 300
San Francisco, CA 94104

REGISTERED ARCHITECT

PLANS APPROVAL DATE

moffatt & nichol
2185 N. California Blvd., Suite 500
Walnut Creek, CA 94596

REGISTERED CIVIL ENGINEER

PLANS APPROVAL DATE

NO.	REVISIONS	BY	DATE

CONTRACT NO. 2011–B–2
CADD FILE
DRAWING NO. A3.11

APPROVED BY

DISTRICT ENGINEER

DATE

PROJECT TITLE
GOLDEN GATE SAUSALITO FERRY TERMINAL IMPROVEMENTS

SHEET TITLE
GUARDRAILS
3D RENDERINGS

GOLDEN GATE BRIDGE
HIGHWAY & TRANSPORTATION DISTRICT

REV. NO.	SHEET NO.	TOTAL SHEETS

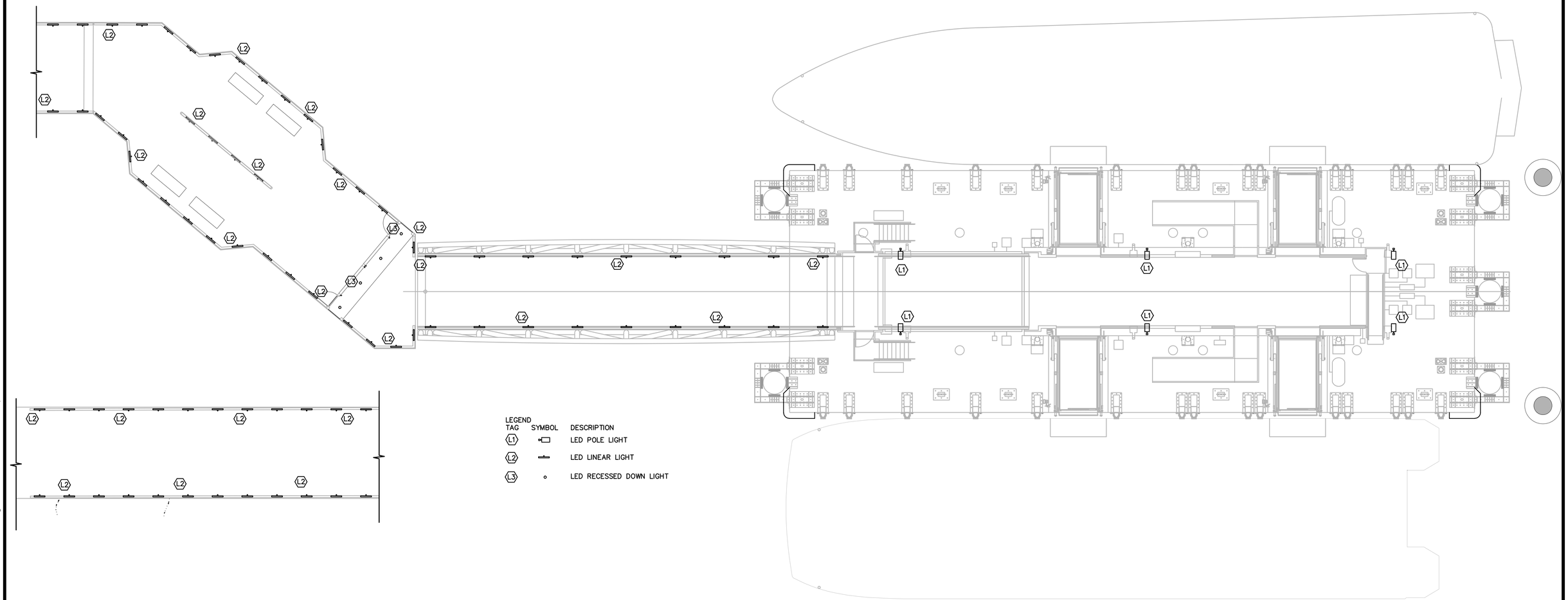

LEGEND

TAG	SYMBOL	DESCRIPTION
L1		LED POLE LIGHT
L2		LED LINEAR LIGHT
L3		LED RECESSED DOWN LIGHT

8'–0" 0'–0" 8'–0" 16'–0"

SCALE: 3/32"=1'–0"

DESIGN	BY	CHECKED	ROBERT JANSEN PROJECT MANAGER
DETAILS	BY	CHECKED	
QUANTITIES	BY	CHECKED	

ORIGINAL SCALE IN INCHES FOR REDUCED PLANS 0 1 2 3

LUMENWORKS DESIGN WITH LIGHT

3410 Lakeshore Ave
Suite 201
Oakland, CA 94610
510-835-7600

moffatt & nichol

2185 N. California Blvd., Suite 500
Walnut Creek, CA 94596

REGISTERED CIVIL ENGINEER

PLANS APPROVAL DATE

NO.	REVISIONS	BY	DATE

CONTRACT NO. 2011–B–2

CADD FILE

DRAWING NO. LT.01

APPROVED BY

DISTRICT ENGINEER

DATE

PROJECT TITLE

GOLDEN GATE SAUSALITO FERRY TERMINAL IMPROVEMENTS

SHEET TITLE

LIGHTING DESIGN LAYOUT

GOLDEN GATE BRIDGE HIGHWAY & TRANSPORTATION DISTRICT

I:\CAD\Golden Gate Ferry\Incoming\LW_Golden Gate_LT.01_071714_2.dwg Jul 17, 2014 – 4:53pm

REV. NO.	SHEET NO.	TOTAL SHEETS

GENERAL NOTES

1. ALL CONDUITS SHALL BE PVC COATED RGS.
2. ALL FLEX. CONDUITS SHALL BE LIQUID TIGHT PVC COATED METAL.
3. ALL JB OR PULL BOXES ARE STAINLESS STEEL 316 NEMA 4X.

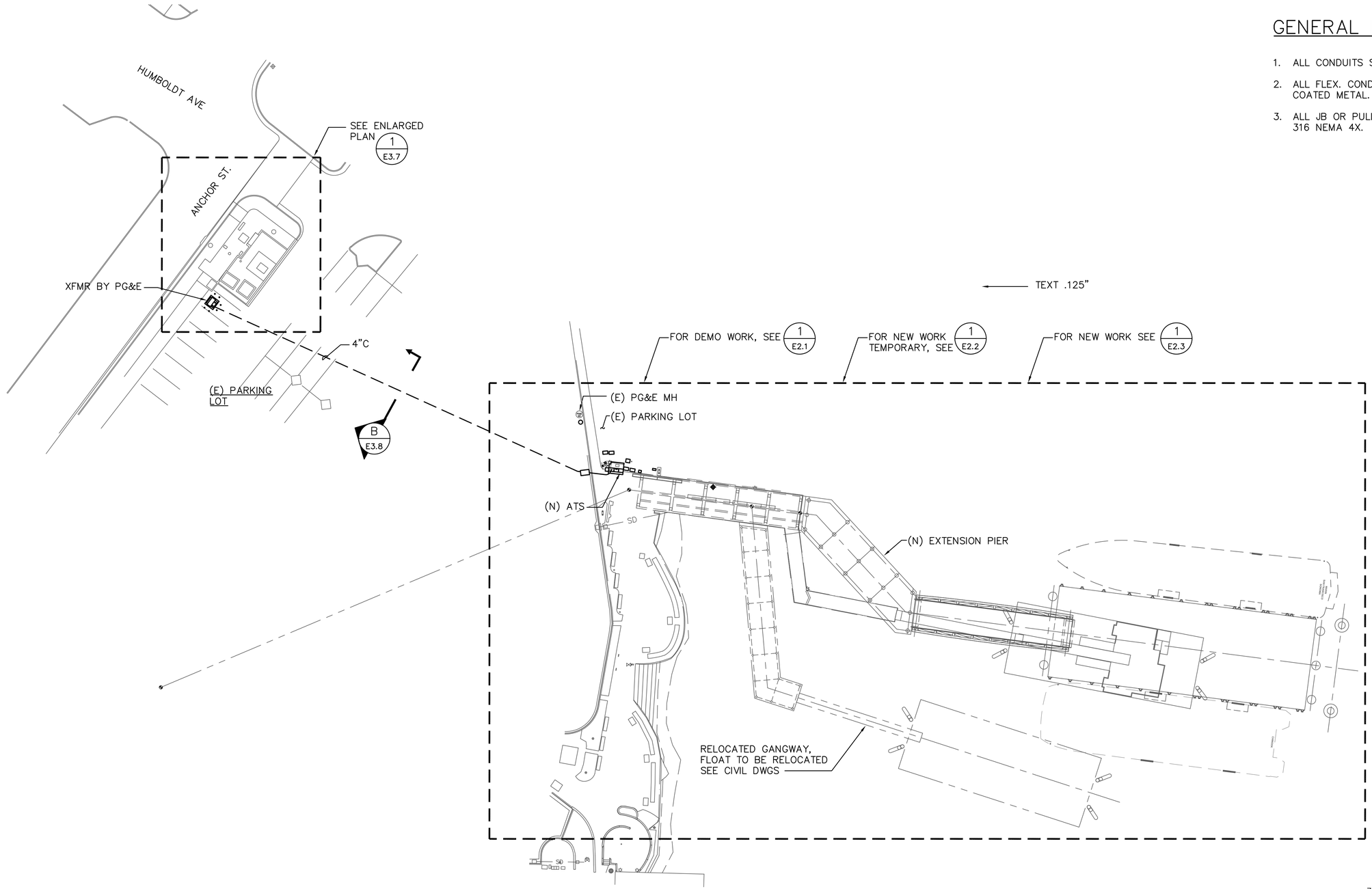

1 E2.0 SITE PLAN
SCALE: 1"=30'-0"

30' 0' 30' 60'
SCALE: 1"=30'-0"

F:\Drawings\2009\0947\Sausalito\703800_E2.0.dwg Jul 17, 2014 - 4:44pm

	BY	CHECKED	
DESIGN	S. HO	B.YEE	BO JENSEN PROJECT MANAGER
DETAILS	S. HO	G. CHEUNG	
QUANTITIES	BY	CHECKED	

ORIGINAL SCALE IN INCHES FOR REDUCED PLANS 0 1 2 3

YEI ENGINEERS, INC.
7700 Edgewater Drive, Suite 128, Oakland, CA 94621
Phone: (510) 383-1050 Fax: (510) 383-1057
www.yeiengineers.com

REGISTERED ELECTRICAL ENGINEER

PLANS APPROVAL DATE

moffatt & nichol
2185 N. California Blvd., Suite 500
Walnut Creek, CA 94596

REGISTERED CIVIL ENGINEER

PLANS APPROVAL DATE

NO.	REVISIONS	BY	DATE

CONTRACT NO. 2011-B-2
CADD FILE 703800_E2.0.dwg
DRAWING NO. E2.0

APPROVED BY

DISTRICT ENGINEER
07/11/14
DATE

PROJECT TITLE
GOLDEN GATE SAUSALITO FERRY TERMINAL IMPROVEMENTS

SHEET TITLE
ELECTRICAL SITE PLAN

GOLDEN GATE BRIDGE HIGHWAY & TRANSPORTATION DISTRICT

REV. NO.	SHEET NO.	TOTAL SHEETS

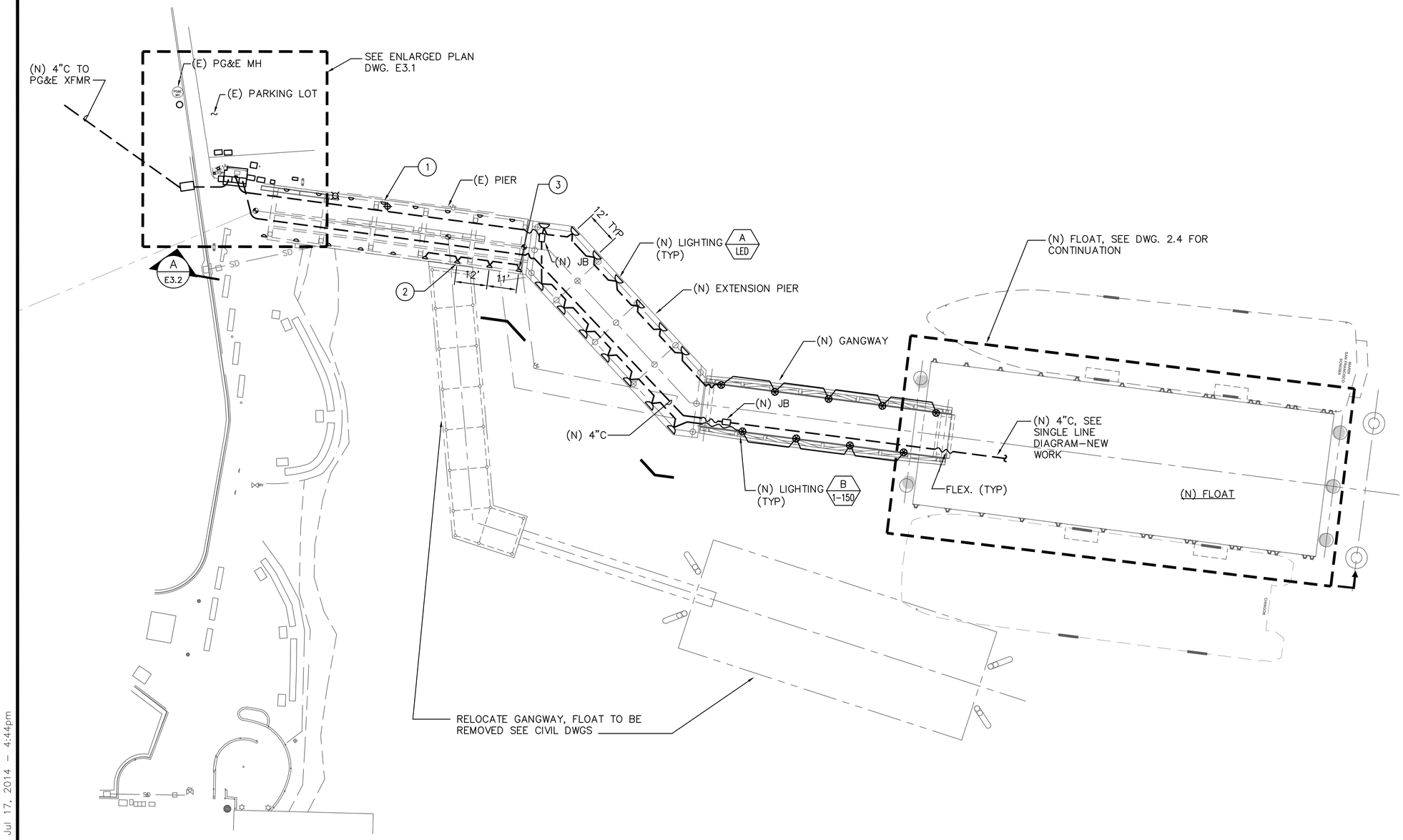

GENERAL NOTES

1. ALL CONDUITS SHALL BE PVC COATED RGS.
2. ALL FLEX. CONDUITS SHALL BE LIQUID TIGHT PVC COATED METAL.
3. ALL JB OR PULL BOXES ARE STAINLESS STEEL 316 NEMA 4X.

SHEET NOTES

1. REPLACE (E) LIGHTING WITH (N).
2. REINSTALL (N) LIGHT, AFTER TEMPORARY PIER REMOVED.
3. ADD (N) LIGHT.

1 / E2.3 GANGWAY FRAMING PLAN – NEW POWER
SCALE: 1"=20'-0"

20'-0" 0'-0" 20'-0" 40'-0"
SCALE: 1"=20'-0"

F:\Drawings\2009\0947\Sausalito\703800_E2.3.dwg Jul 17, 2014 - 4:44pm

	BY	CHECKED	
DESIGN	S. HO	B. YEE	BO JENSEN PROJECT MANAGER
DETAILS	S. HO	G. CHEUNG	
QUANTITIES			

ORIGINAL SCALE IN INCHES FOR REDUCED PLANS 0 1 2 3

YEI ENGINEERS, INC.
7700 Edgewater Drive, Suite 128, Oakland, CA 94621
Phone: (510) 383-1050 Fax: (510) 383-1057
www.yeiengineers.com

REGISTERED ELECTRICAL ENGINEER

PLANS APPROVAL DATE

moffatt & nichol
2185 N. California Blvd., Suite 500
Walnut Creek, CA 94596

REGISTERED CIVIL ENGINEER

PLANS APPROVAL DATE

NO.	REVISIONS	BY	DATE

CONTRACT NO. 2011-B-2
CADD FILE 703800_E2.3.dwg
DRAWING NO. E2.3

APPROVED BY

DISTRICT ENGINEER
07/11/14
DATE

PROJECT TITLE
GOLDEN GATE SAUSALITO FERRY TERMINAL IMPROVEMENTS

SHEET TITLE
ELECTRICAL
NEW WORK

GOLDEN GATE BRIDGE HIGHWAY & TRANSPORTATION DISTRICT

REV. NO.	SHEET NO.	TOTAL SHEETS

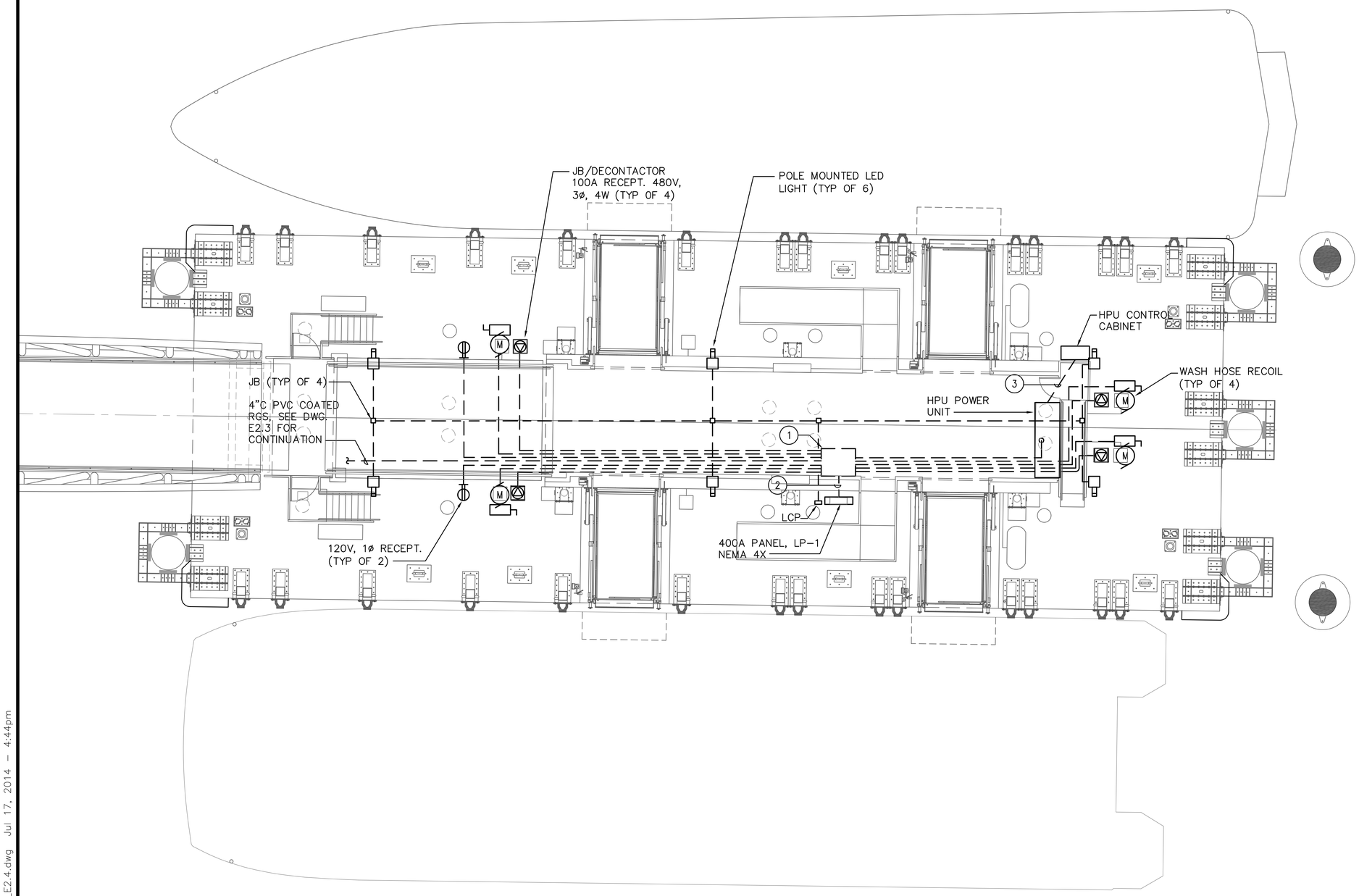

NOTES

1. PROVIDE PULL BOX STAINLESS STEEL TYPE 316, 30"X24"X8"H NEMA 4X. INCLOSURE.
2. 2-4"C, PVC COATED RGS.
3. CONDUIT & WIRES BY OTHERS.

8' 0' 8' 16'
SCALE: 1/8"=1'-0"

1 / E2.4 ELECTRICAL FLOAT DECK PLAN
SCALE: 1/8"=1'-0"

F:\Drawings\2009\0947\Sausalito\703800_E2.4.dwg Jul 17, 2014 - 4:44pm

	BY	CHECKED	
DESIGN	S. HO	B. YEE	BO JENSEN PROJECT MANAGER
DETAILS	S. HO	G. CHEUNG	
QUANTITIES			

ORIGINAL SCALE IN INCHES FOR REDUCED PLANS 0 1 2 3

YEI ENGINEERS, INC.
7700 Edgewater Drive, Suite 128, Oakland, CA 94621
Phone: (510) 383-1050 Fax: (510) 383-1057
www.yeiengineers.com

REGISTERED ELECTRICAL ENGINEER

PLANS APPROVAL DATE

moffatt & nichol
2185 N. California Blvd., Suite 500
Walnut Creek, CA 94596

REGISTERED CIVIL ENGINEER

PLANS APPROVAL DATE

NO.	REVISIONS	BY	DATE

CONTRACT NO. 2011-B-2
CADD FILE 703800_E2.4.dwg
DRAWING NO. E2.4

APPROVED BY

DISTRICT ENGINEER

07/11/14
DATE

PROJECT TITLE
GOLDEN GATE SAUSALITO FERRY TERMINAL IMPROVEMENTS

SHEET TITLE
ELECTRICAL
FLOAT DECK PLAN

GOLDEN GATE BRIDGE
HIGHWAY & TRANSPORTATION DISTRICT

REV. NO.	SHEET NO.	TOTAL SHEETS

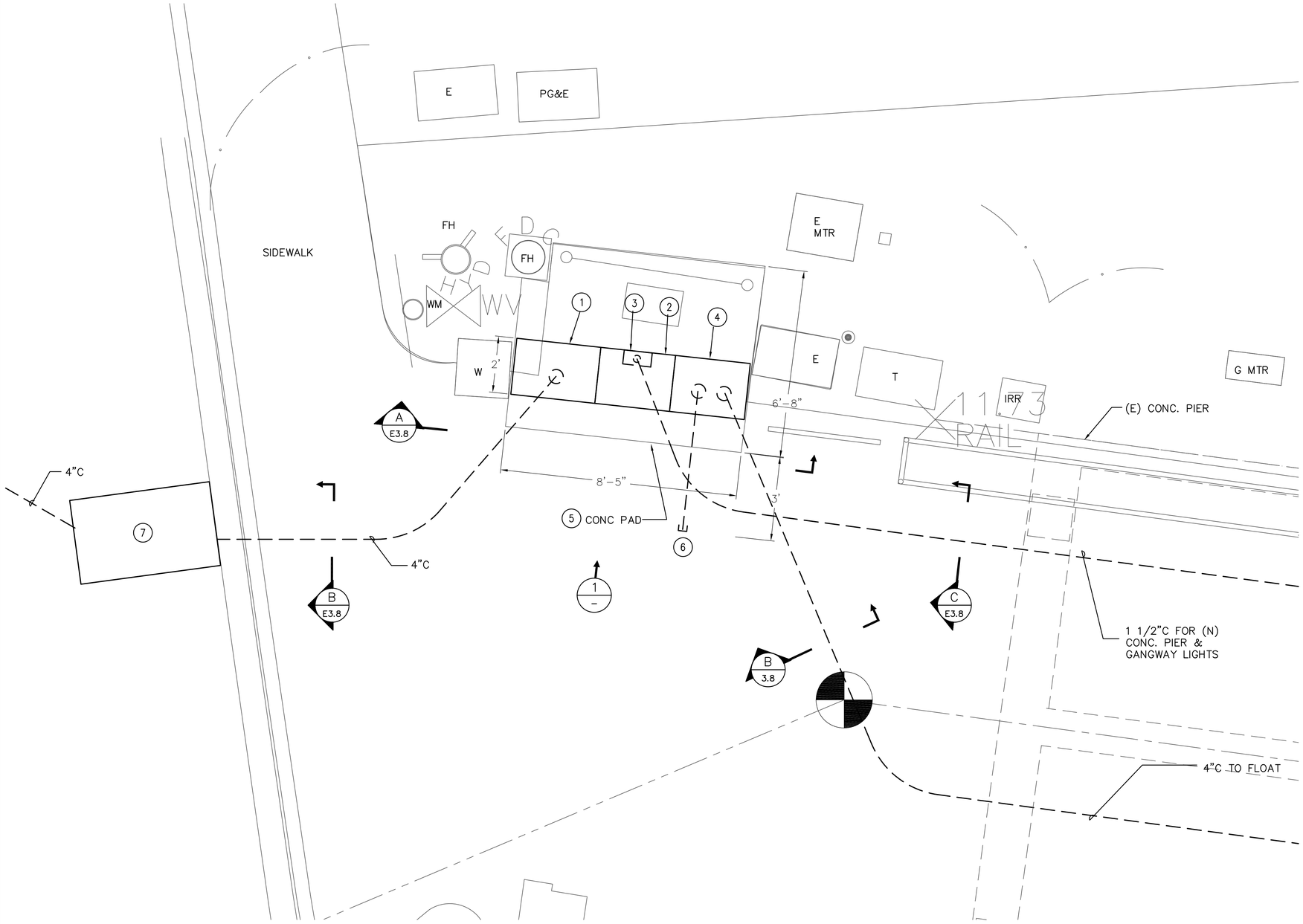

1 / E3.1 ENLARGED PLAN
SCALE: 1/2"=1'-0"

1 / – PURCHASE TICKETS MACHINE
NIS (DEMOLISH BY OTHERS)

SHEET NOTES

1. 480V, 3ø, 3W METER SECTION.
2. DP 480/277V 400A, 3ø, 3W.
3. PROVIDE (N) GR1400 BLUE BOX LCP, ENCLOSURE SURFACE MOUNTED NEMA 4 S.S. 316, 277V PROGRAMMING, COMPACT SIZE (12"X18"X6"D) OR EQUAL.
4. ATS 480V, 400A, 3ø, 3W.
5. REMOVE (E) TICKETS MACHINES & FARE TICKETS BOARD, DISCONNECT & REMOVED ASSOCIATED CONDUITS, WIRES TO SOURCE PB OR PANELS. BU OTHERS.
6. CAP 3"C FOR FUTURE.
7. PROVIDE 3'X5' PULL BOX.

	BY	CHECKED	
DESIGN	S. HO	B. YEE	BO JENSEN PROJECT MANAGER
DETAILS	S. HO	G. CHEUNG	
QUANTITIES			

ORIGINAL SCALE IN INCHES FOR REDUCED PLANS 0 1 2 3

YEI ENGINEERS, INC.
7700 Edgewater Drive, Suite 128, Oakland, CA 94621
Phone: (510) 383-1050 Fax: (510) 383-1057
www.yeiengineers.com

REGISTERED ELECTRICAL ENGINEER

PLANS APPROVAL DATE

moffatt & nichol
2185 N. California Blvd., Suite 500
Walnut Creek, CA 94596

REGISTERED CIVIL ENGINEER

PLANS APPROVAL DATE

NO.	REVISIONS	BY	DATE

CONTRACT NO. 2011-B-2
CADD FILE 703800_E3.1.dwg
DRAWING NO. E3.1

APPROVED BY

DISTRICT ENGINEER 07/11/14
DATE

PROJECT TITLE
GOLDEN GATE SAUSALITO FERRY TERMINAL IMPROVEMENTS

SHEET TITLE
ELECTRICAL
ENLARGED PLAN

GOLDEN GATE BRIDGE
HIGHWAY & TRANSPORTATION DISTRICT

F:\Drawings\2009\0947\Sausalito\703800_E3.1.dwg Jul 17, 2014 - 4:44pm

REV. NO.	SHEET NO.	TOTAL SHEETS

GENERAL NOTES

1. ALL CONDUITS SHALL BE PVC COATED RGS CONDUIT.
2. ALL FLEXIBLE LIQUID TIGHT STEEL CONDUIT SHALL BE PVC COATED.
3. ALL STRAPS, SCREWS, BOLTS, NUTS & WASHERS SHALL BE STAINLESS STEEL 316.

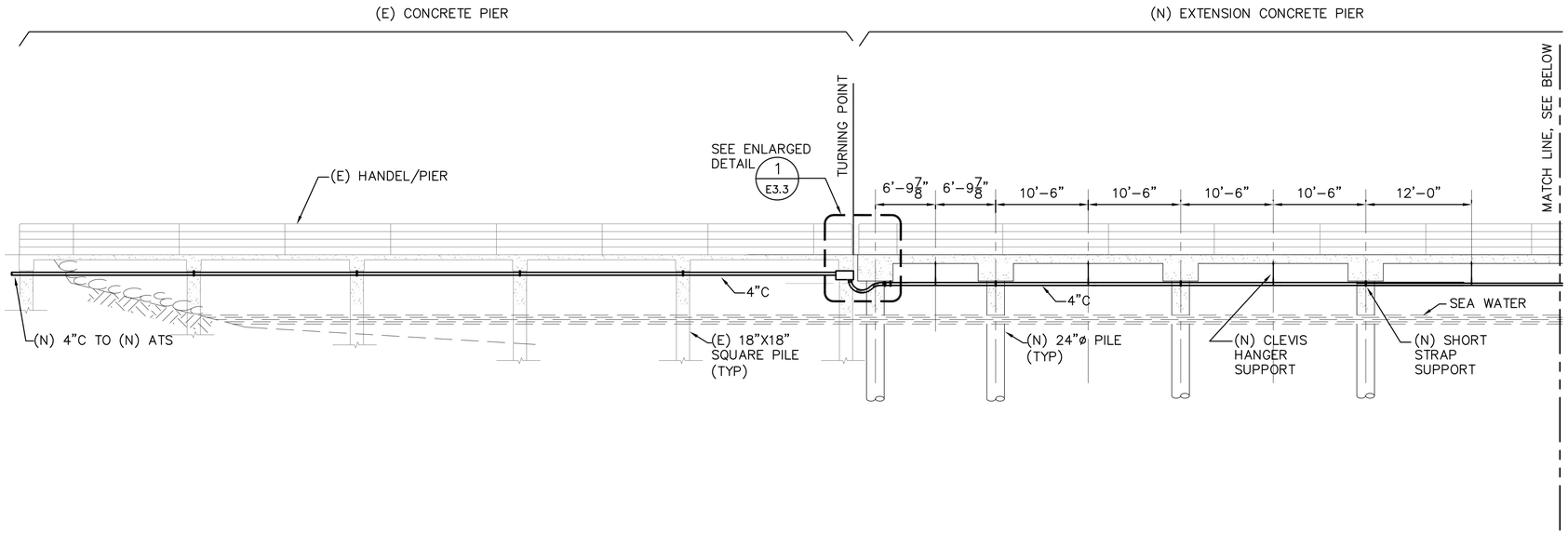

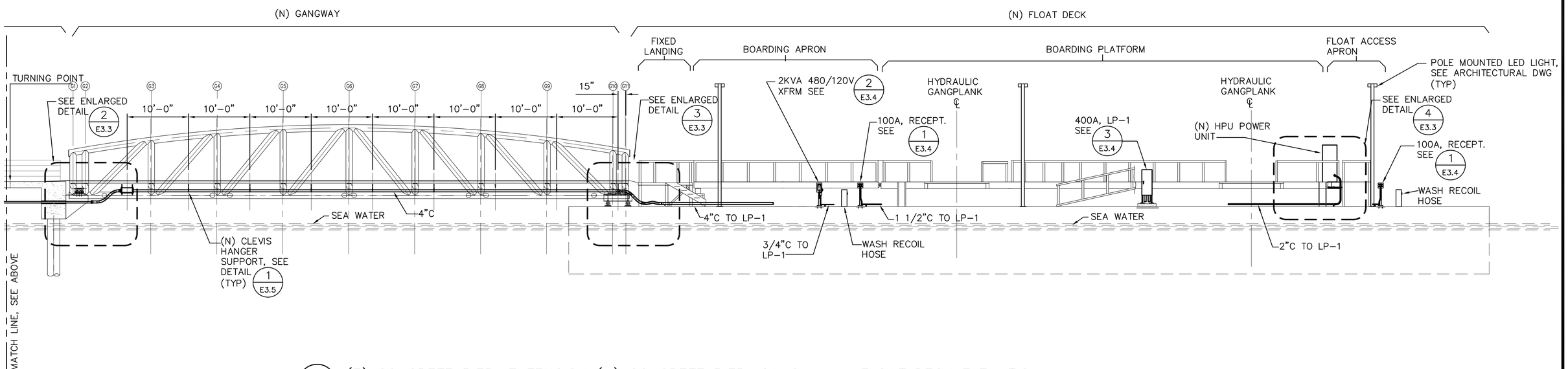

1 / E3.2 (E) CONCRETE PIER, EXTENSION (N) CONCRETE PIER, GANGWAY & FLOAT DECK ELEVATION

SCALE: 1/8"=1'-0"

8' 0' 8' 16'

SCALE: 1/8"=1'-0"

F:\Drawings\2009\0947\Sausalito\703800_E3.2.dwg Jul 17, 2014 - 4:44pm

DESIGN	BY S. HO	CHECKED B.YEE	BO JENSEN PROJECT MANAGER
DETAILS	BY S. HO	CHECKED G. CHEUNG	
QUANTITIES	BY	CHECKED	

ORIGINAL SCALE IN INCHES FOR REDUCED PLANS 0 1 2 3

YEI ENGINEERS, INC.
7700 Edgewater Drive, Suite 128, Oakland, CA 94621
Phone: (510) 383-1050 Fax: (510) 383-1057
www.yeiengineers.com

REGISTERED ELECTRICAL ENGINEER

PLANS APPROVAL DATE

moffatt & nichol
2185 N. California Blvd., Suite 500
Walnut Creek, CA 94596

REGISTERED CIVIL ENGINEER

PLANS APPROVAL DATE

NO.	REVISIONS	BY	DATE

CONTRACT NO. 2011-B-2

CADD FILE 703800_E3.2.dwg

DRAWING NO. E3.2

APPROVED BY

DISTRICT ENGINEER

07/11/14

DATE

PROJECT TITLE

GOLDEN GATE SAUSALITO FERRY TERMINAL IMPROVEMENTS

SHEET TITLE

ELECTRICAL PIER ELEVATION

GOLDEN GATE BRIDGE HIGHWAY & TRANSPORTATION DISTRICT

REV. NO.	SHEET NO.	TOTAL SHEETS

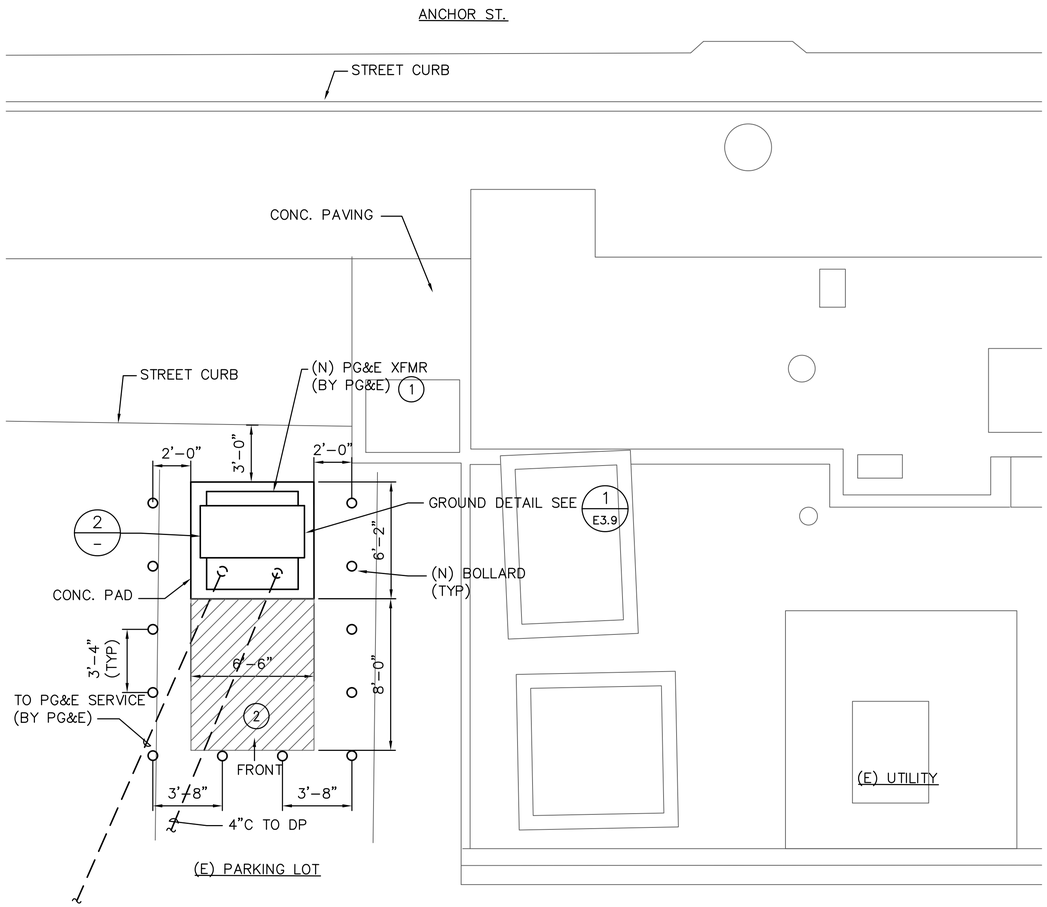

1 E-3.7 ENLARGED PLAN
SCALE: 1/4"=1'-0"

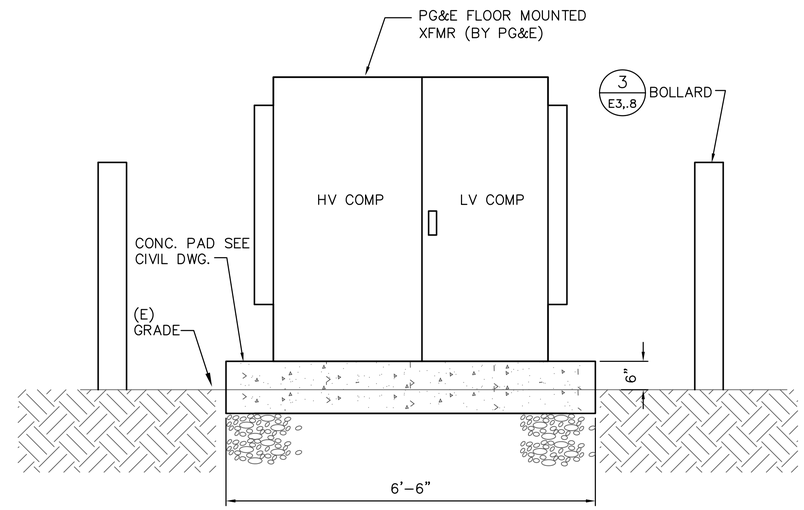

FRONT ELEVATION

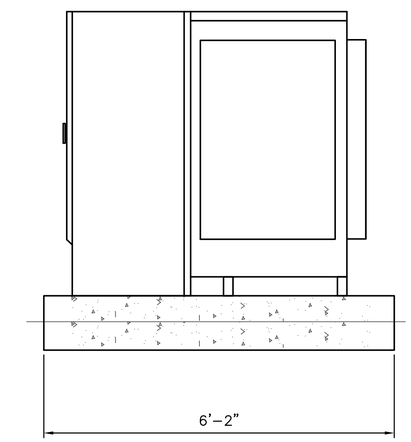

SIDE VIEW

2 - XFMR DETAIL
SCALE: 3/8"=1'-0"

GENERAL NOTES

1. ALL CONDUITS SHALL BE PVC COATED RGS.
2. ALL FLEX. CONDUITS SHALL BE LIQUID TIGHT PVC COATED METAL.
3. ALL JB OR PULL BOXES ARE STAINLESS STEEL 316 NEMA 4X.

SHEET NOTES

1. PROVIDE TRANSFORMER BY PG&E.
2. KEEP 8-FOOT MIN. IN FRONT OF XRMR.

20'-0" 0'-0" 20'-0" 40'-0"
SCALE: 1"=20'-0"

DESIGN	BY S. HO	CHECKED B. YEE	BO JENSEN PROJECT MANAGER
DETAILS	BY S. HO	CHECKED G. CHEUNG	
QUANTITIES	BY	CHECKED	

ORIGINAL SCALE IN INCHES FOR REDUCED PLANS 0 1 2 3

YEI ENGINEERS, INC.
7700 Edgewater Drive, Suite 128, Oakland, CA 94621
Phone: (510) 383-1050 Fax: (510) 383-1057
www.yeiengineers.com

REGISTERED ELECTRICAL ENGINEER

PLANS APPROVAL DATE

moffatt & nichol
2185 N. California Blvd., Suite 500
Walnut Creek, CA 94596

REGISTERED CIVIL ENGINEER

PLANS APPROVAL DATE

NO.	REVISIONS	BY	DATE

CONTRACT NO. 2011-B-2
CADD FILE 703800_E3.7.dwg
DRAWING NO. E3.7

APPROVED BY

DISTRICT ENGINEER
07/11/14
DATE

PROJECT TITLE
GOLDEN GATE SAUSALITO FERRY TERMINAL IMPROVEMENTS

SHEET TITLE
ELECTRICAL
NEW PIER
XFMR PLAN SECTION & DETAIL

GOLDEN GATE BRIDGE HIGHWAY & TRANSPORTATION DISTRICT

F:\Drawings\2009\0947\Sausalito\703800_E3.7.dwg Jul 17, 2014 - 4:44pm