STAFF REPORT
SAUSALITO PLANNING COMMISSION/ HISTORIC LANDMARKS BOARD

Project:	**Levin Residence (Tanglewood) – 168 Harrison Avenue** **Design Review Permit** **DR 13-322**
Meeting Date:	January 22, 2014
Staff:	Steve Padovan, Contract Planner SP

REQUESTS

Approval of a **Design Review Permit** to allow for the replacement of an existing property fence with a six-foot high, vertical rail, ornamental black metal fence around the perimeter of the property at 168 Harrison Avenue which is on the Local Historic Register.

PROJECT INFORMATION

Applicant	Asriel and Carmela Levin
Owner	Levin Family Trust
Location/Parcel Size	168 Harrison Avenue; APN 065-091-10 42,600 square feet (see **Exhibit B** for vicinity map)
General Plan	Medium-Low Density Residential Land Use Designation (Residential density up to 7.3 dwelling units per acre)
Zoning	Single-Family Residential (R-1-6) Zoning District (6,000 square foot minimum lot size)
Authority	Any modification to a property listed on the Local Historic Register is subject to design review as specified by Section 10.46.060 (Procedures for demolition, addition or modifications to a property on the Local Historic Register) and joint Planning Commission and Historic Landmarks Board review is required.
CEQA	The project consists of the replacement of an existing non-historic fence with a new perimeter fence. The project is determined to be categorically exempt pursuant to Section 15303 (New construction of accessory structures) of the State CEQA Guidelines which specifically provides an exemption for new accessory structures at existing private facilities.

ROLE OF THE HISTORIC LANDMARKS BOARD AND PLANNING COMMISSION

The review process involves a Design Review Permit for the proposed fence. Since the property is located on the Local Historic Register, the Design Review Permit is under the authority of both the Planning Commission and the Historic Landmarks Board (HLB), and a joint hearing is required to review and act upon the permit. Both the Planning Commission and the HLB must favorably make the findings listed in Sections 10.54.050 (Design Review Permits) and 10.46.060 (Modifications to property on Local Historic Register) to approve the Design Review Permit.

PROJECT DESCRIPTION

BACKGROUND

The subject property, known as the Tanglewood Residence, was constructed in 1873 and is listed on the City of Sausalito's Local Historic Register. The Historical Landmark designation was granted by the City Council through Resolution No. 4024 (**Exhibit E**) on February 19, 1991. This historic designation was granted based on the finding that the structure is a unique example of British Colonial Bungalow architecture. The Council also found that the gardens have equal merit for historical recognition because the original owner planted many rare and exotic plants that can only survive in the local microclimate. Therefore, the designation includes the structure and all the surrounding grounds and landscaping. The owner at the time, William Stephen Allen, secured the historic designation in anticipation of his future donation of the property to the University of California.

The University of California Regents obtained ownership of the property on July 20, 1992. Being that the University is a state agency, it was not subject to local regulations with regard to its use or management of the property for its own purposes. However, in the past, the UC Regents would submit projects to the HLB for courtesy review. In 2004, the University made several changes to the residence including the removal of two bathroom additions, removal of the dining room extension, removal of the triangular deck addition and garden storage area, the addition of a new concrete foundation, a re-roof and new exterior paint. The property was sold by the UC Regents in April 2013 to the current owners, Asriel and Carmela Levin. Recently, the City received complaints from surrounding neighbors that the landscaping and grounds were not being properly maintained. The Levins have begun to regularly maintain the grounds and landscaping and are in the process of determining how best to protect the plants from deer and other wildlife.

The existing property line fencing is a mixture of metal cyclone wire fencing (with barbed wire in several locations), deer fencing, and a metal picket fence along Harrison Avenue varying between four and five feet in overall height which appears to have been constructed from the 1960s to the present. Ivy has grown over large portions of the fence causing a dense barrier in many areas along the north property line and along the Bulkley frontage. The entry gate on Harrison Avenue consists of cemented stone pillars with decorative wrought iron and appears to be the only portion of the existing perimeter fence with any historic significance.

PROJECT DESCRIPTION

The Levins have submitted a Design Review Permit to install a six-foot tall, ornamental black metal fence around the entire perimeter of the property (see **Exhibit C** for the proposal and photographs and **Exhibit D** for plans). The new six-foot high metal fencing comes in 8-foot prefabricated panels

that are installed between metal posts anchored in concrete. The fence design involves a horizontal rail at the base and two parallel horizontal rails at about the five-foot height level with vertical rails every four inches topped with a flattened spade. The portion of the fence along Harrison will be the only portion with a variable spade height and was chosen because that portion is the most visible and it provides an improved aesthetic. The primary reason for the fence is to protect the gardens from deer, improve the aesthetics of the property and to reduce potential risk to persons or animals by removing the barbed wire.

PROJECT ANALYSIS

General Plan and Zoning Ordinance Consistency

To approve the proposed project, the Planning Commission and the HLB must determine that the project is consistent with all applicable General Plan policies and the Zoning Ordinance. The following General Plan policy is relevant to the proposed project:

> *Policy CD-7.1 Historic Character: Continue the City's effort to retain and enhance its historical legacy in the review of proposed projects in historic districts and of individual structures and sites with historic significance as shown on General Plan map GP-9.*

In addition, Zoning Code Section 10.46.060 outlines the procedures to follow for modifications to a historic designated site. The policy and regulations were developed in order to ensure that historic sites go through a thorough review by the Historic Landmarks Board and Planning Commission prior to any modifications being approved and constructed. The fence proposal does require a Design Review Permit and has been reviewed by Mark Hulbert, of Preservation Architecture, who has determined that the existing fencing was not identified in the historic record and is not historically significant (see **Exhibit F**). He also has concluded that the new fencing is neutral in character and would not have a potential detrimental effect on the property.

Zoning District Consistency

Section 10.44.020.D, *Accessory uses and structures – Walls Fences and Railings*, of the Zoning Ordinance allows for a six-foot high fence on all property lines in the Residential Zone Districts as long as the fence is constructed in a manner that does not unreasonably obstruct a view from an adjacent property or unreasonably obstruct sunlight from reaching an adjacent property. The proposed fence design does not exceed six feet in height and its open rail design does not unreasonably obstruct views or sunlight substantially beyond that which the existing fence and landscaping already obstruct. Therefore, staff concludes that the project is consistent with the purpose and intent of the Zoning Ordinance as described in the findings listed in the Resolution (see **Exhibit A**).

Historic Landmarks Board Review

The Historic Landmarks Board (HLB) did a preliminary review of the proposed fence application on January 8, 2014 (see HLB memo under **Exhibit G**). At that meeting, the HLB members discussed the proposed fence designs indicating that they preferred one style be used throughout, asked for clarification on the type of fence/gate proposed for the Bulkley frontage and stated that they do not support the removal of the gate on Harrison Avenue. The applicant's representative discussed the requested changes with the owner and in response, the owner has agreed to retain and not modify the entry gate on Harrison. The owner also clarified that the fence will include the use of a variable height picket fence along Harrison and the level picket fence on all remaining property lines. The reasoning for the two different styles is that the portion along Harrison is the most visible and the variable height provides an improved aesthetic. The other portions of the fence are not readily visible and the other fencing will be used. Based on the HLB's comments at the preliminary hearing, staff has included a

condition indicating that one style of fencing be used and that a gate design be submitted for review and approval by staff prior to construction of the fence.

Design Review Permit
In order to approve or conditionally approve the Design Review Permit, the Planning Commission and HLB must determine that the project is in conformance with the findings listed in Section 10.54.050 (Design Review Findings) of the Zoning Ordinance, which includes the Historic Design Guidelines, and the findings listed in Section 10.46.060F.

The Historic Design Guidelines is an advisory document with the purpose of providing guidance to ensure that the changes to the historic built environment will be sensitive to the community's historical legacy. In Chapter 2 of the Historic Design Guidelines, Treatment of Historic Structures, the section under ***Landscape Features*** is most applicable to this project. Section 2.89 states that a replacement fence or gate should be in character with those seen historically (**see Exhibit H**). Fences are usually lower in height, transparent in nature and contemporary interpretations of traditional fences may be considered. The applicant is removing the existing cyclone fencing and other non-historical fencing and replacing it with metal fencing that is more in keeping with the wrought iron fencing that was typical of estate properties in the past. The historic gate and columns on Harrison are also being retained. Therefore, the proposed design appears to meet the criteria listed above.

As stated previously, the applicant's historic consultant, Mark Hulbert, has reviewed the proposed fence and determined that the existing fencing is not historically significant (except for the Harrison gate) and that the new fence would not have a detrimental effect on the historic character of the property. Mr. Hulbert also reviewed the Secretary of the Interior's *Standards for Rehabilitation* and determined that the new fence meets the applicable standards.

In conclusion, the proposed fencing is consistent with the purpose and intent of the General Plan, Zoning Ordinance, Historic Design Guidelines and the Secretary of the Interior's *Standards for Rehabilitation* as described in the findings listed in the Resolution (see **Exhibit A**).

PUBLIC NOTICE AND CORRESPONDENCE

On January 9, 2014 the property was posted and public hearing notices were mailed to all property owners and occupants within 300 feet of the project site.

Correspondence regarding the project is provided in **Exhibit I**.

RECOMMENDATION

Staff recommends that the Planning Commission and Historic Landmarks Board approve the attached draft resolution (**Exhibit A**) approving the Design Review Permit for a new six-foot, ornamental metal perimeter fence.

Alternatively, the Planning Commission and Historic Landmarks Board may:

- Continue the hearing for additional information and/or project revisions; or
- Direct staff to prepare a resolution for denial of the Design Review Permit.

EXHIBITS

A. Draft Resolution – Design Review Permit
B. Vicinity Map
C. Proposed project and photographs
D. Plans dated stamped December 10, 2013
E. City Council Resolution No. 4024
F. Historic Evaluation dated January 14, 2014
G. Historic Landmarks Board memo dated January 8, 2014
H. Excerpt from Chapter 2 of the Historic Design Guidelines
I. Public Correspondence
    1. Lisa and Stan Deck dated received January 13, 2014
    2. Lucinda Watson dated received January 15, 2014

I:\CDD\PROJECTS - ADDRESS\H\Harrison 168\DR 13-322\PC-HLB Staff Report 1-22-14.doc

BLANK

CITY OF SAUSALITO PLANNING COMMISSION AND HISTORIC LANDMARKS BOARD RESOLUTION NO. 2014-

APPROVAL OF A DESIGN REVIEW PERMIT FOR A NEW ORNAMENTAL METAL PERIMETER FENCE AT 168 HARRISON AVENUE DR 13-322

WHEREAS, an application has been filed by the applicant and owner, Asriel and Carmela Levin, requesting Planning Commission and Historic Landmarks Board approval of a Design Review Permit for a new perimeter fence at 675 Bridgeway (APN 065-091-10), a property listed on the Local Historic Register; and

WHEREAS, the project site is located within the Medium-Low Density Residential General Plan Land Use Designation and Single-Family Residential Zoning District; and

WHEREAS, the Planning Commission and the Historic Landmarks Board conducted a duly-noticed joint public hearing on January 22, 2014 at which time all interested persons were given an opportunity to be heard; and

WHEREAS, the Planning Commission and the Historic Landmarks Board have reviewed and considered the information contained in the staff reports as well as any and all oral and written testimony on the proposed project; and

WHEREAS, the Planning Commission and the Historic Landmarks Board have reviewed and considered the plans date-stamped December 10, 2013; and

WHEREAS, the Planning Commission and the Historic Landmarks Board find that the proposed project, as conditioned herein, is consistent with the General Plan and complies with the requirements of the Zoning Ordinance as described in the staff report; and

WHEREAS, approval of the project is categorically exempt from the requirements of the California Environmental Quality Act (CEQA) pursuant to CEQA Guidelines Section 15303, New construction of accessory structures, which allows for the construction of fences at an existing private facility.

NOW, THEREFORE, THE PLANNING COMMISSION AND HISTORIC LANDMARKS BOARD HEREBY RESOLVE AS FOLLOWS:

1. The project is exempt from the requirements of CEQA pursuant to CEQA Guidelines Section 15303, New construction of accessory structures.

2. A Design Review Permit for a new perimeter fence is approved based upon the findings provided in Attachment 1, and subject to the conditions of approval provided in Attachment 2. The project plans are provided in Attachment 3.

RESOLUTION PASSED AND ADOPTED, at the regular meeting of the Planning Commission and Historic Landmarks Board on the 22nd day of January, 2014, by the following vote:

AYES:
NOES:
ABSENT:
ABSTAIN:

Jeremy Graves, AICP
Secretary to the Planning Commission

AYES:
NOES:
ABSENT:
ABSTAIN:

Secretary to the Historic Landmarks Board

Attachments:
1. Findings
2. Conditions of Approval
3. Plans date stamped December 10, 2013.

I:\CDD\PROJECTS - ADDRESS\H\Harrison 168\DR 13-322\PC-HLB Reso 1-22-14.doc

CITY OF SAUSALITO PLANNING COMMISSION AND HISTORIC LANDMARKS BOARD RESOLUTION
JANUARY 22, 2014
DR 13-322
168 HARRISON AVENUE

ATTACHMENT 1: FINDINGS

DESIGN REVIEW FINDINGS

Pursuant to Zoning Ordinance Section 10.54 (Design Review Procedures), the Planning Commission and Historic Landmarks Board find:

1. The proposed project is consistent with the General Plan, any applicable specific plans, any applicable design guidelines, and this chapter.

   The project is consistent with General Plan policies, including those related to preserving and maintaining the historic character of properties on the Local Register, as well as the Historic Design Guidelines.

2. The proposed architecture and site design complements the surrounding neighborhood and/or district by either: a) Maintaining the prevailing design character of the neighborhood and/or district or b) Introducing a distinctive and creative solution which takes advantage of the unique characteristics of the site and contributes to the design diversity of Sausalito.

   The project will complement the surrounding neighborhood by removing an unmaintained and potentially dangerous perimeter fence and replacing it with a metal fence that is reminiscent of the wrought iron fences installed in the past.

3. The proposed project is consistent with the general scale of structures and buildings in the surrounding neighborhood and/or district.

   The project consists of a new perimeter fence that is six feet in height and similar to the existing fence but is more in keeping with the historic character of the property.

4. The proposed project has been located and designed to minimize obstruction of public views and primary views from private property.

   The proposed fence does not obscure views from the public sidewalk or street because it is an open rail picket style fence that does not substantially block views from the street any more than the existing fence and landscaping.

5. The proposed project will not result in a prominent building profile (silhouette) above a ridgeline.

   The proposed project is strictly a perimeter fence, designed to minimize blockage of views and no expansion of the main residential structure's height or bulk is proposed. Therefore, the project will result in no new visual impacts.

6. The proposed landscaping provides appropriate visual relief, complements the buildings and structures on the site, and provides an attractive environment for the enjoyment of the public.

   The project does not include any change to existing trees or site landscaping, except for the removal of ivy and some other plants for the installation of the fence. New shrubs will be installed where applicable.

7. The design and location of buildings provide adequate light and air for the project site, adjacent properties, and the general public.

   The project will not adversely affect the design and location of the existing building on the site and the fence is mostly transparent which allows light to pass through, similar to the existing fence. Therefore, the project will not affect light and air for adjacent properties.

8. Exterior lighting, mechanical equipment, and chimneys are appropriately designed and located to minimize visual, noise and air quality impacts to adjacent properties and the general public.

   The project does not include any new exterior lighting, mechanical equipment or exhaust flues.

9. The project provides a reasonable level of privacy to the site and adjacent properties, taking into consideration the density of the neighborhood, by appropriate landscaping, fencing, and window, deck and patio configurations.

   Based on the existing location of the fence, existing landscaping and orientation of the building and design elements, the project will not impact privacy to the site or adjacent properties.

10. Proposed entrances, exits, internal circulation, and parking spaces are configured to provide an appropriate level of traffic safety and ease of movement.

    The new fence will not interfere with access onto the property nor impede pedestrian traffic on the adjacent public sidewalk. The existing gate on Harrison will be retained.

11. The proposed design preserves protected trees and significant natural features on the site to a reasonable extent and minimizes site degradation from construction activities and other potential impacts.

    The fence will replace an existing fence along the perimeter of the property and should not impact protected trees or natural features on the site.

12. The project site is consistent with the guidelines for heightened review for projects which exceed 80% of the maximum allowed Floor Area Ratio and/or site coverage, as specified in subsection E (Heightened (Design) Review Findings).

    The project is not subject to Heightened (Design) Review Requirements as no addition of building coverage or floor area is proposed.

LOCAL REGISTER HISTORIC PROPERTY FINDINGS

Pursuant to Sausalito Zoning Ordinance Section 10.46.060.F (Historic Overlay District and Local Register), the Planning Commission and Historic Landmarks Board find:

1. The proposed new construction or alteration is compatible with the architectural and historical features of the structure and/or district.

   The fence will complement the existing historic structure and grounds by replacing an unmaintained non-historic fence with a new metal fence that is more reminiscent of the wrought iron fences installed at the time the historic structure was built.

2. The historical context of the original structure or district has been considered during the development and review of the proposal.

   The proposed fence was reviewed using the Historical Design Guidelines and a historic preservation specialist provided an analysis of the new fencing in context with the existing character of the building and the surrounding property.

3. The criteria for listing the structure or site on the local register does not apply, or the Historic overlay district will not be affected by the new construction or alterations.

   The property is listed on the Local Historic Register and the procedures for modifying a historic property have been followed.

4. The State Historic Building Code is being applied to minimize alterations to the original historic structure.

   The State Historic Building code applies to the structure itself which is not being modified by this proposal. The fence will comply with all building codes.

5. The Secretary of Interior Standards for Treatment of Historic Properties have been used to review and consider the new construction and proposed alterations.

   The Secretary of the Interior's Standards for the Treatment of Historic Properties have been reviewed by the historic specialist who has determined that the new fence is in compliance with the standards.

6. Alternative uses and configurations have been considered as part of the Design Review process.

   The project is for the replacement of an existing perimeter fence which is in keeping with the character of the property. No changes are proposed to the structure or the residential use of the property.

7. Findings specified by Chapter 10.54 (Design Review Procedures) can be made.

   The Design Review Findings can be favorably made, as discussed in the findings above.

8. The proposed new construction or alteration will be compatible with and help achieve the purposes of the Historic Overlay District (Chapter 10.28.040.A).

   The property is not located in the Historic Overlay District.

PLANNING COMMISSION and HISTORIC LANDMARKS BOARD RESOLUTION
JANUARY 22, 2014
DR 13-322
168 HARRISON AVENUE

ATTACHMENT 2: CONDITIONS OF APPROVAL

These conditions of approval apply to the plans prepared by Carmela Levin, date stamped December 10, 2013.

General

1. The contractor should identify and mark the water lines that are located within five feet of the southerly side property line to ensure that they are not damaged during construction of the fence.

2. A landscape and irrigation plan for the proposed replacement of shrubs and fence climbing plants that are removed along the perimeter of the property shall be submitted to the Community Development Department for review and approval. Native and drought tolerant plants shall be considered. All planting shall be automatically irrigated and installed within 60 days of completion of the fence. No trees shall be removed for the installation of the fence.

3. Upon building permit submittal, the Conditions of Approval shall be shown on all construction drawings.

4. Upon building permit submittal, the applicant shall provide a written response demonstrating compliance with each Condition of Approval.

5. Upon building permit submittal, the applicant shall provide electronic copies and paper copies of the approved colors and materials board(s), including but not limited to all manufacturers' information related to materials, specifications, and cut sheets for all exterior lighting fixtures.

6. In the event that any condition imposing a fee, exaction, dedication or other mitigation measure is challenged by the project sponsors in an action filed in a court of law or threatened to be filed therein which action is brought within the time period provided by law, this approval shall be suspended pending dismissal or final resolution of such action. If any condition is invalidated by a court of law, the entire project shall be reviewed by the City and substitute conditions may be imposed.

7. The applicant shall indemnify the City for any and all costs, including without limitation attorneys' fees, in defending this project or any portion of this project and shall reimburse the City for any costs incurred by the City's defense of the approval of the project.

8. Prior to issuance of a construction permit, a construction staging plan and construction schedule shall be submitted for review and approval of the City Engineer or designee.

9. The placement of the construction materials, debris boxes, equipment, and vehicles shall be subject to review and approval by the City Engineer, shall be placed to minimize obstruction of roads and gutters, shall be maintained in a clean and safe condition, and shall not be maintained in a manner that becomes a nuisance to the neighborhood.

10. For any damage to existing public improvements due to construction activities, Developer shall repair, at their expense, damage prior to issuance of a Certificate of Occupancy. Contractor must protect all existing and new improvements.

11. No alternative or unrelated construction, site improvements, tree removal and/or alteration, exterior alterations and/or interior alterations, and/or renovations not specified in the project plans, or alterations approved by the Community Development Director shall be performed on the project site. In such cases, this approval shall be rendered null and void unless approved by the Community Development Director as a modification to this approval.

Advisory Notes

Advisory notes are provided to inform the applicant of Sausalito Municipal Code requirements, and requirements imposed by other agencies. These requirements include, but are not limited to, the items listed below.

12. This approval will expire in two (2) years from the effective date of this resolution if the property owner has not exercised the entitlements hereby granted, or an extension has not been filed prior to the expiration date.

13. An approval granted by the Planning Commission does not constitute a building permit or authorization for construction. Appropriate construction permit(s) issued by the Building Division must be obtained prior to construction.

14. All applicable City fees as established by City Council resolutions and ordinances shall be paid. Third party review fees (cost plus 10%) shall be paid.

15. An encroachment permit shall be obtained from the Department of Public Works prior to use of the public right-of-way for non-public purposes (e.g., materials storage, debris box storage) including any and all construction and demolition activities.

16. Pursuant to Municipal Code Chapter 8.54, applicants shall submit a Recycling Management Plan to the Community Development Department prior to the issuance of any construction permits, unless the requirement is waived pursuant to Section 8.54.050.

17. Pursuant to Municipal Code Chapter 11.17, dumping of residues from washing of painting tools, concrete trucks and pumps, rock, sand, dirt, agricultural waste, or any other materials discharged into the City storm drain system that is not composed entirely of storm water is prohibited. Liability for any such discharge shall be the responsibility of person(s) causing or responsible for the discharge. Violations constitute a misdemeanor in accordance with Section 11.17.060.B.

18. Pursuant to Municipal Code Section 12.16.140, the operation of construction, demolition, excavation, alteration, or repair devices and equipment within all residential zones and areas within a 500 foot radius of residential zones shall only take place during the following hours:
Weekdays – Between 8:00 a.m. and 6:00 p.m.
Saturdays – Between 9:00 a.m. and 5:00 p.m.
Sundays – Prohibited
City holidays (not including Sundays) – Between 9:00 a.m. and 7:00 p.m.

19. Pursuant to Municipal Code Section 18.12.100, existing sewer service laterals shall be inspected for surface water connections and leakage at the time of remodeling of any building. Deteriorated service laterals shall be repaired prior to approval of the building permit.

20. Permits required by other agencies having jurisdiction within the construction area must be obtained in accordance with the respective agency's regulations.
Marin Municipal Water District – (415-945-1455), including landscaping and irrigation regulations;
Southern Marin Fire Protection District -- (415-388-8182); and

21. Pursuant to Municipal Code Section 10.54.100, construction activities undertaken in accordance with a design review permit shall comply with the construction time limit regulations based upon the project's valuation. Construction projects which are not completed within the time limits are subject to daily penalties.

I:\CDD\PROJECTS - ADDRESS\H\Harrison 168\DR 13-322\PC-HLB Reso 1-22-14.doc

PLANNING COMMISSION and HISTORIC LANDMARKS BOARD RESOLUTION
JANUARY 22, 2014
DR 13-322
168 HARRISON AVENUE

ATTACHMENT 3: PROJECT PLANS

I:\CDD\PROJECTS - ADDRESS\H\Harrison 168\DR 13-322\PC-HLB Reso 1-22-14.doc

VICINITY MAP

168 HARRISON AVENUE

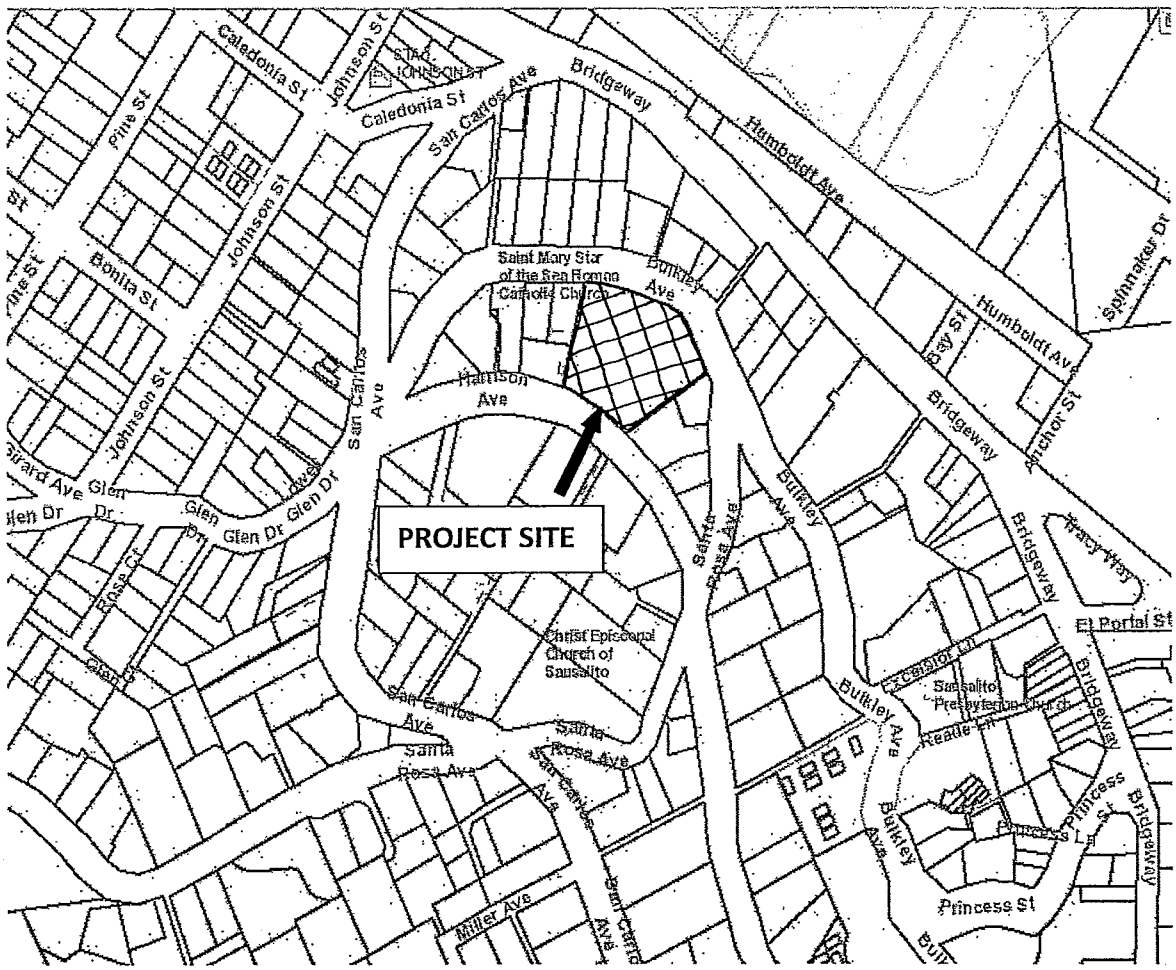

BLANK

12/10/2013

Sausalito planning department

Dear Sir/ Madam,

We are the owners of 168 Harrison Avenue in Sausalito (AKA Tangelwood).

We purchased this historic property, because we fell in love with the building and the garden. Carmela, trained in Architecture is especially sensitive to historic references and both of us are extremely environmentally consciences.

We noticed that the garden is being attended by dear and other animals and the plants have been destroyed and eaten. We are carefully and systematically cleaning the premises, watering, weeding pruning trees etc, but most of our affords are undermined as the garden is exposed to the outside world of wild life because of the very low and deteriorated fence that the property is surrounded by. We are asking the city to allow us to upgrade the fence to a 6' unified metal fence, as shown in the pictures that we submitted. We chose a very nice, neutral, almost transparent simple fence in order to comply with all the requirements, to fit into the general Sausalito look, to "not contradict" any style surrounding nor the style of the property.

We value the garden very highly and see it as a priority, almost an urgency, to fence it out of the animals. We are planning to "green" the fence with plants, just like it was before, since we love the general look of Tangelwood.

The current fence is rusted, inconsistent in look, height and materials, at places entangled with barbed wire, overall very unattractive and could be dangerous to people, kids and animals. We propose to replace the old fence with a unified simple but attractive metal picket fence that will be transparent, not intrusive and will have a neutral look that will comply with all the home styles around.

We should mention that before we started anything, we consulted all adjacent neighbors and uniformly received positive feedback to replace the fence.

Sincerely,

Carmela and Asriel Levin

168 Harrison Ave,
Sausalito, CA, 94965
415-260-4888

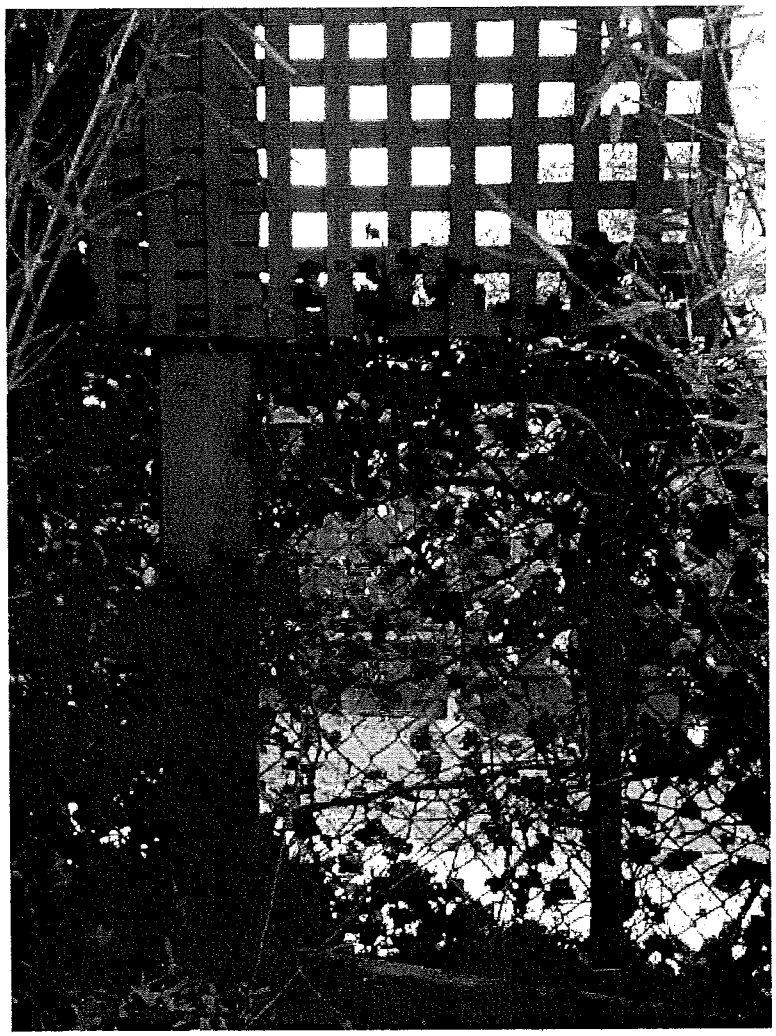

DEC 1 0 2013

Existing fence to the North
near the garage.

DEC 1 0 2013

Existing Fence to the West: Harrison Ave.

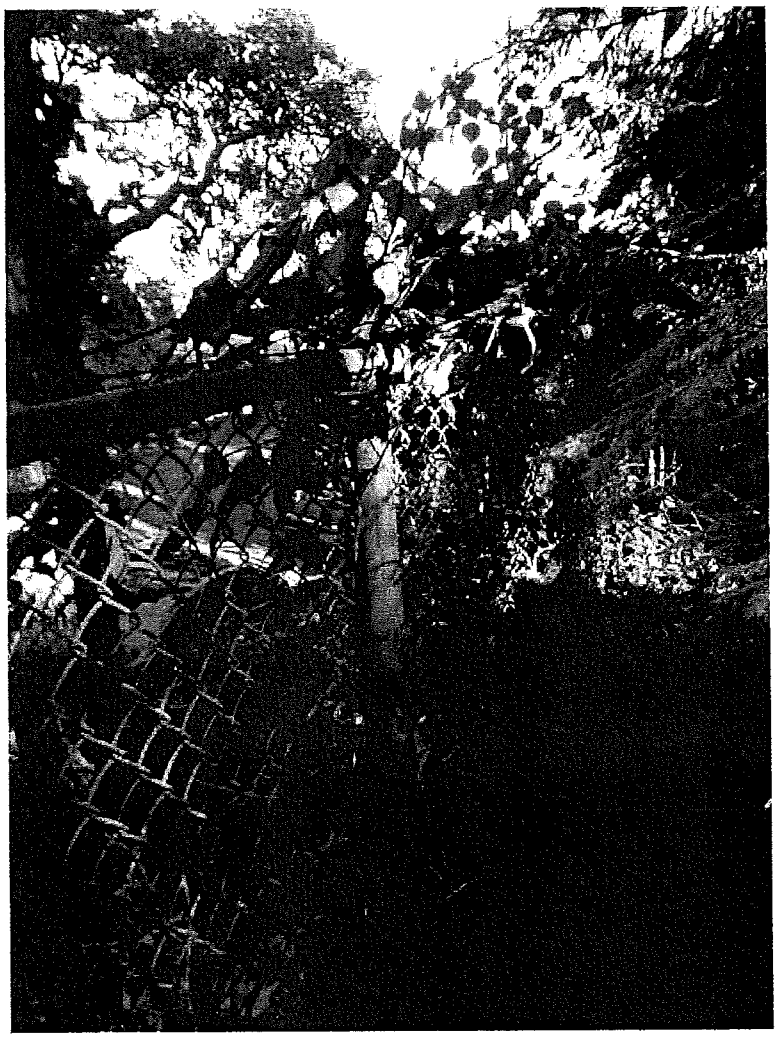

DEC 1 0 2013

Existing fence to the North.

DEC 1 0 2013

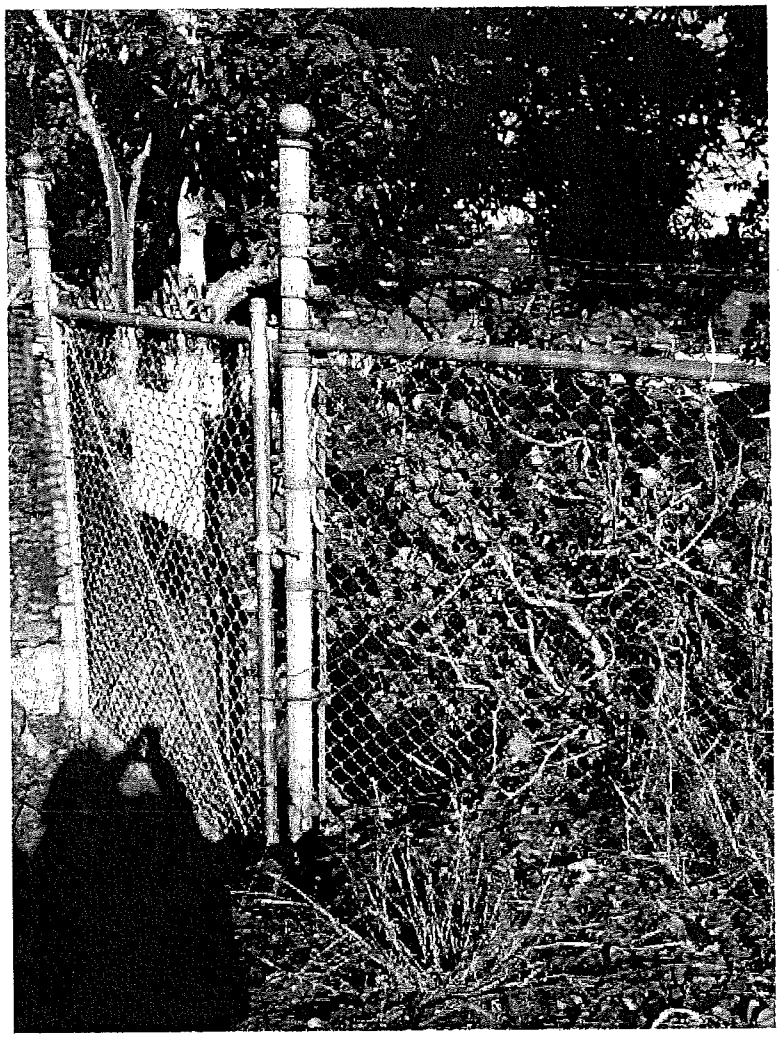

DEC 1 0 2013

Existing gate to the east.

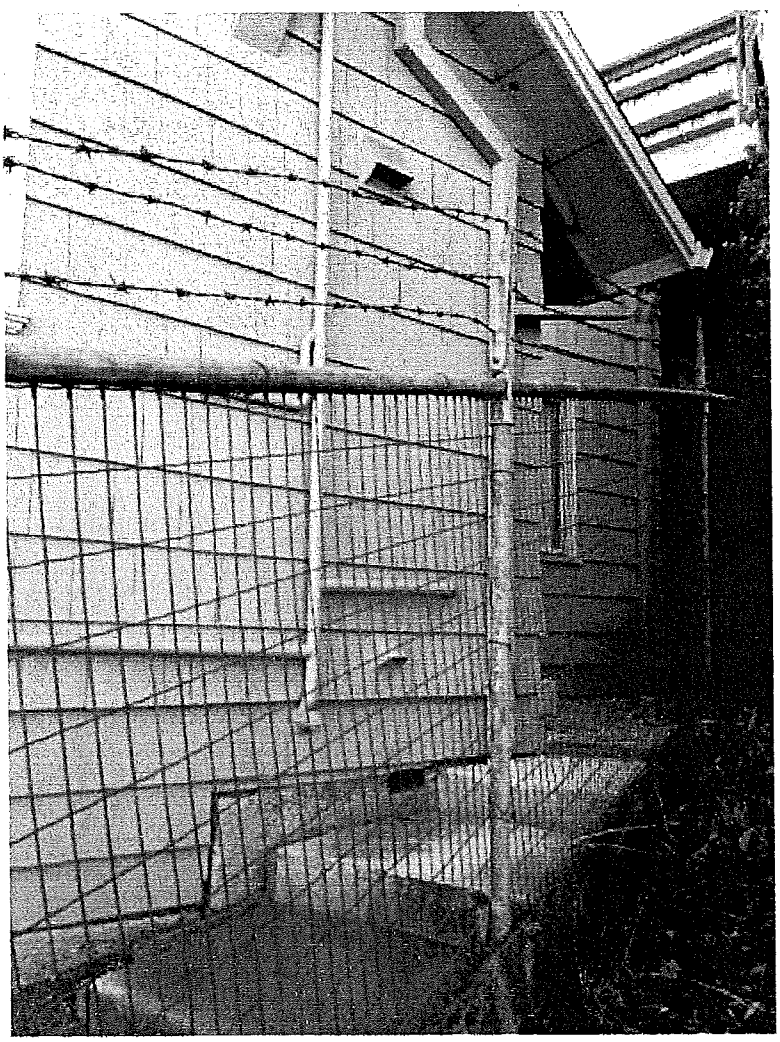

DEC 10 2013

Existing fence to the south

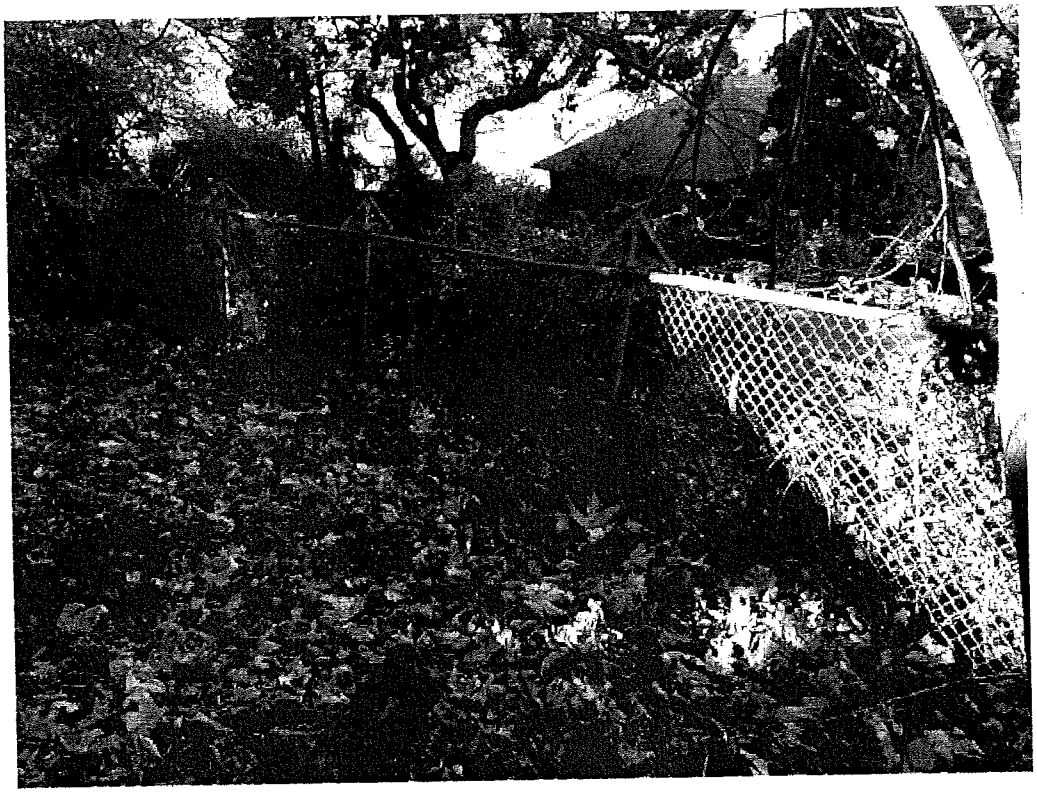

DEC 10 2013

Existing fence to the east : Bulkley Ave

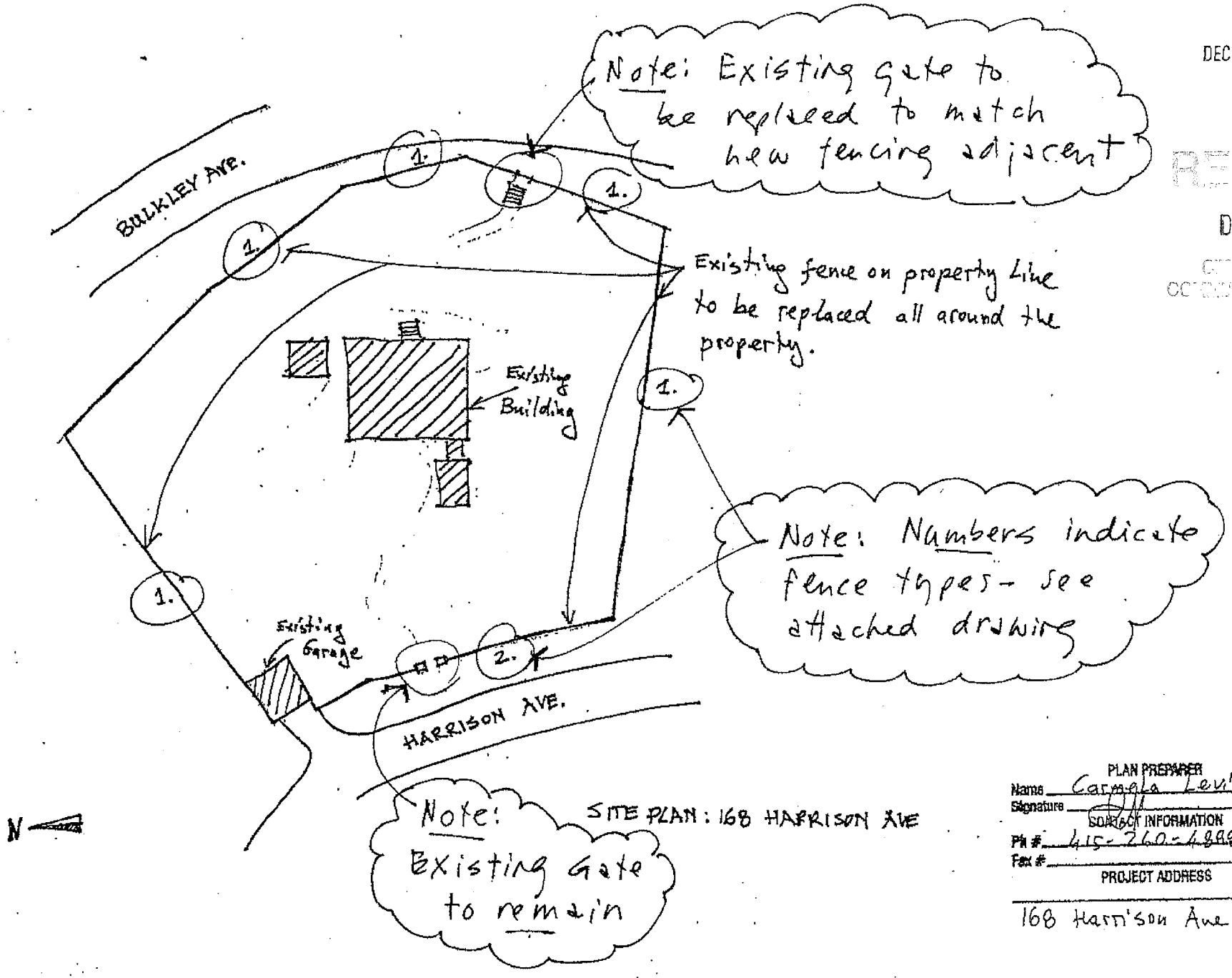

SITE PLAN : 168 HARRISON AVE

DEC 10 2013

RECEIVED

DEC 10 2013

CITY OF SAUSALITO
COMMUNITY DEVELOPMENT

PLAN PREPARER

Name Carmela Levin

Signature

CONTACT INFORMATION

Ph # 415-260-4888

Fax #

PROJECT ADDRESS

168 Harrison Ave, Sausalito

RECEIVED
DEC 1 0 2013
COMMUNITY DEVELOPMENT

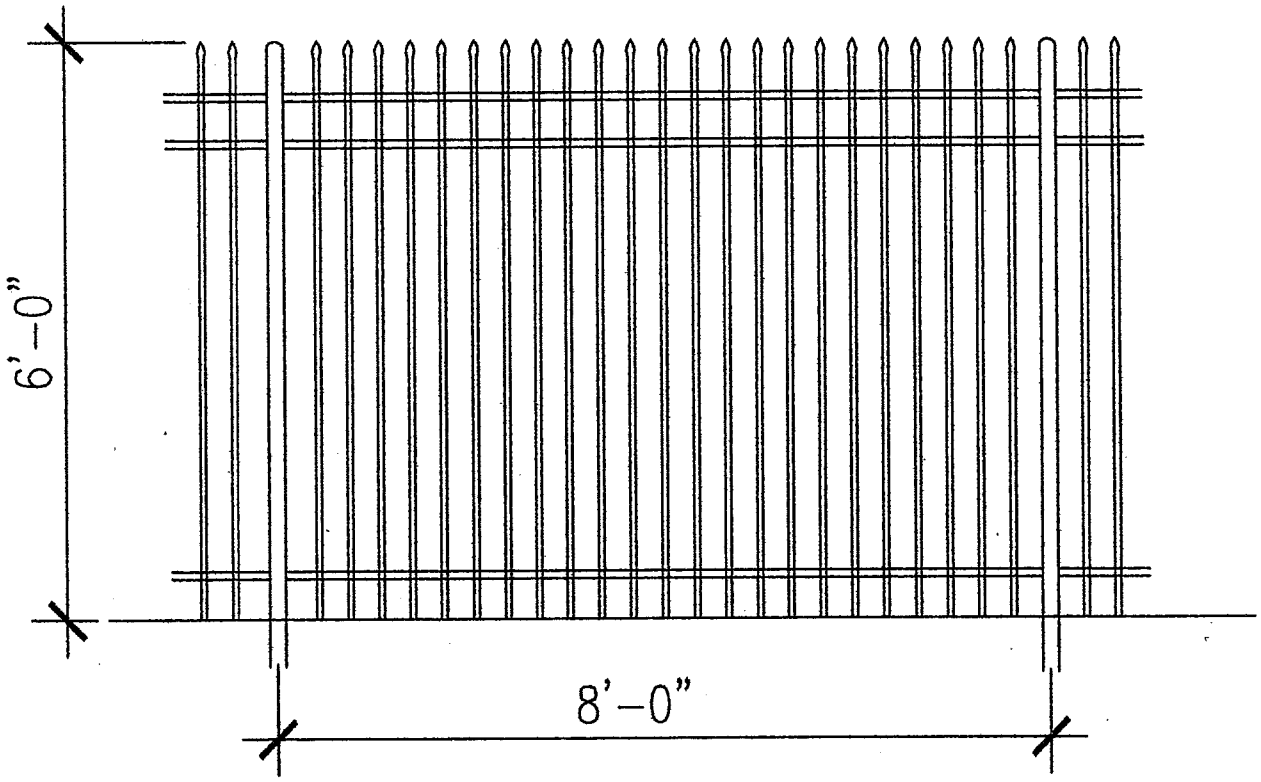

1. TYP. FENCE ELEVATION FOR NORTH, EAST AND SOUTH OF PROPERTY

FENCE #1

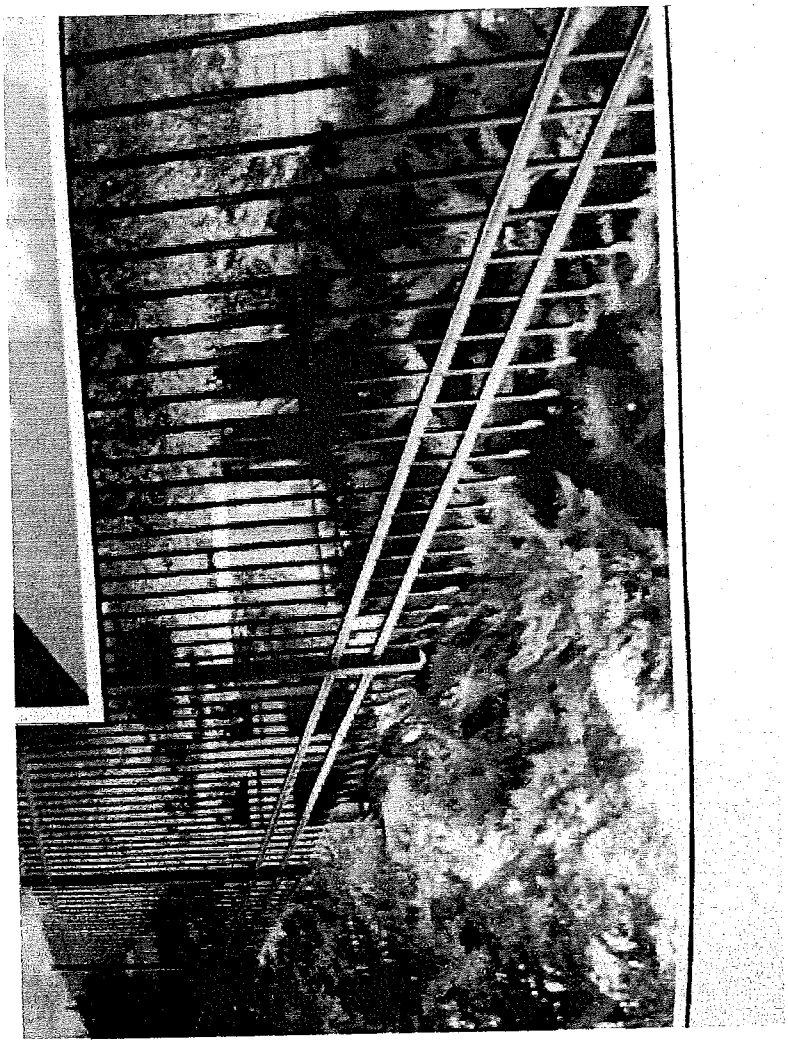

DEC 10 2013

PROPOSED FENCE # 1

RECEIVED
DEC 1 0 2013
COMMUNITY DEVELOPMENT

DEC 1 0 2013

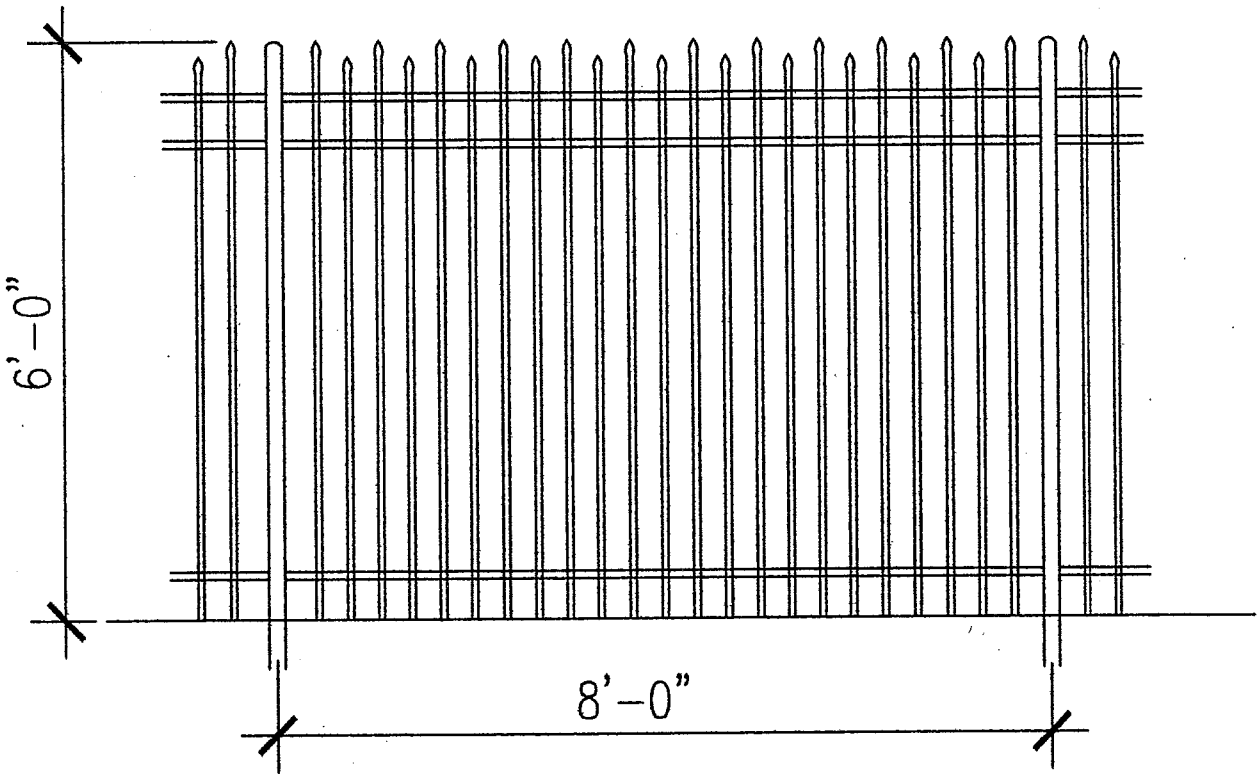

2. TYP. FENCE ELEVATION FOR WEST SIDE OF PROPERTY

SCALE: 1'=0'-1/2"

FENCE #2

Carmela Levin

415-260-4888

168 Harrison Ave, Sausalito

DEC 1 0 2013

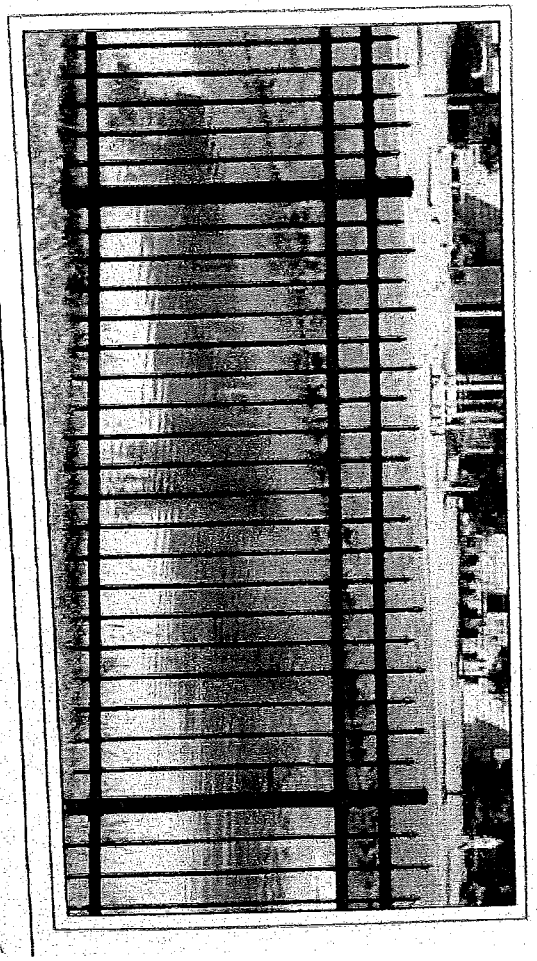

The unique Echelon Plus® Conqueror panel configuration of worlds' by combining the striking look of spear-topped pick a flush top rail.

The look of excellence in a traditional ornamental fence is f

PROPOSED FENCE #2

BLANK

FILE

RESOLUTION NO. 4024

RESOLUTION OF THE CITY COUNCIL OF THE CITY OF SAUSALITO DESIGNATING THE RESIDENCE, GARDEN AND GROUNDS ~~AT 168 HARRISON AVENUE (TANGLEWOOD) AN HISTORICAL LANDMARK~~

The City Council of the City of Sausalito does find and resolve as follows:

Section 1. Background and Findings.

1. Municipal Code Title 8 (Buildings) Chapter 8.44 (Preservation of Historical Landmarks) provides that the City of Sausalito may designate historical landmarks within the City.

2. W. Stephen Allen has submitted an application seeking to have his home and gardens at 168 Harrison, known as Tanglewood, designated an historical landmark.

3. This application has been referred to, and considered by both the Historical Landmarks Board and the Planning Commission. By letter dated November 28, 1990 the Historical Landmarks Board has recommended to the Planning Commission that this site be historically designated noting that it is the only remaining example of British Colonial Bungalow architecture in Sausalito, and that the gardens contain rare exotics and historic plantings unique to the community. On January 30, 1991 the Planning Commission adopted its Resolution 1991-03, recommending that the residence, gardens and grounds be designated an historical landmark The City Council has reviewed and considered these recommendations. By this reference, the Council incorporates as a part of this resolution Planning Commission Resolution 1991-03, attached as Exhibit A, and except as those conditions are modified below, adopts the findings and decisions set forth in it.

4. The City Council concurs with the recommendations of the Historic Landmarks Board and the Planning Commission and finds that Tanglewood includes an elegant and unique example of British Indian Colonial architecture and exemplifies the best efforts of the British element in their early development of "the Hill." The Council finds that the gardens have equal merit for historical recognition in that the original owner, William H. Tillinghast, had a great interest in tropical plants many of which could only survive in Southern Marin in the benign micro-climate of "the

Hill." The Council further finds that every effort should be taken to preserve this property as a single, unsubdivided lot and that the preservation and protection of this residence and its site should be encouraged by every reasonable means, including through historical landmark designation.

5. The landmark designation of this representative example of British Colonial Bungalow architecture and the preservation of the rare exotics and historic plantings is in conformance with the purposes and standards of Municipal Code Title 8 Chapter 8.44 and related Title 2 Chapters 2.24 and 2.28

Section 2. Decision.

NOW, THEREFORE, it is hereby resolved, ordered and declared as follows:

1. That the City Council concurs with the Historical Landmarks Board and the Planning Commission that the entire property at 168 Harrison, also known as Tanglewood, is justifiably designated an historical landmark for the reasons set forth in section 1, above and for the reasons set forth in Exhibit A.

2. That the residence, gardens and grounds at 168 Harrison, "Tanglewood" be and the same is hereby designated as an historical landmark pursuant to the provisions of Sausalito Municipal Code Title 8 Chapter 8.44 (Ordinance No. 901). The site for this designation is all that certain property commonly known and referred to as 168 Harrison Avenue, Sausalito, APN: 65-150-10.

3. The Council adopts by this reference the conditions recommended by the Planning Commission in their Resolution 1991-03, set forth in Exhibit A to this Resolution, except as modified below. The Council concurs with the HLB that conditions 7 and 8 of Resolution 1991-03 should be and the same are hereby amended to read as follows:

> 7. That in the event of any proposed alteration or change to the gardens and grounds at 168 Harrison Avenue, known as Tanglewood, the Historic Landmarks Board (HLB) will be responsible for reviewing the landscaping master plan and making recommendations to the Planning Commission based on that plan.

8. That in the event a conflict arises regarding the evolution of the landscaping at 168 Harrison Avenue, due to possible contradictions between the provisions of Ordinance 901 and Ordinance 1055, the Historic Landmarks Board will base its recommendation on the landscaping master plan and will request that a companion recommendation be sought from the Tree and View Committee. Both of these recommendations would be subsequently forwarded to the Planning Commission for final action.

Section 3. CCP Section 1094.6 Judicial review of this resolution is governed by the provisions of section 1094.6 of the Code of Civil Procedure.

PASSED AND ADOPTED at a regular meeting of the City Council of the City of Sausalito on the 5th day of March, 1991, by the following vote:

AYES: Councilmember: Buddie, Mitchell, Suckle, Sweeny, Mayor Rose
NOES: Councilmember: none.
ABSENT: Councilmember: none.

Mayor, City of Sausalito

ATTEST:

CITY CLERK

RESOLU..ON OF THE CITY COUNCIL OF THE CITY OF SAUSALITO
DESIGNATING A RESIDENTIAL SITE AT 168 HARRISON AVENUE
AS A HISTORICAL LANDMARK

WHEREAS, Sausalito Municipal Code Title 8 (Building), Chapter 8.44 (Preservation of Historical Landmarks) provides that the City of Sausalito may designate landmarks within the City; and

WHEREAS, the Sausalito City Council has conducted a duly noticed public hearing on February 19, 1991 and has heard evidence oral and documentary on Historical Landmarks Application No. HL 90-167, filed by W. Stephen Allen, requesting proceedings to be initiated whereby the residence and gardens at 168 Harrison Avenue may be designated as a historical landmark; and

WHEREAS, it appears that the property at 168 Harrison Avenue contains one of the original and more unique residences in Sausalito, which is of pleasing scale and is a fine example of the unique architecture of the late nineteenth century; and that the property is a well-wooded site with picturesque building placement, and is an exceptional example of period landscaping with both rare and antique plant species, thereby lending noteworthy period character and charm to the immediate neighborhood and the City of Sausalito; and

WHEREAS, the proposed historical landmark designation of this representative example of the domestic architecture and landscape design of an earlier era is in conformance with the purposes and standards of Municipal Code Title 8, Chapter 8.44, and related Title 2, Chapters 2.24 and 2.28, as well as consistent with the General Plan objectives to preserve the existing character and beauty of the residential neighborhoods; and

WHEREAS, on August 14, 1990 the Historical Landmarks Board voted to recommend to the Planning commission that this residence and its gardens be historically designated, as it was constructed in 1873 and is the second oldest residence remaining in the City of Sausalito; and

WHEREAS, on January 30, 1991, the Planning Commission adopted Resolution No. 1991-03 recommending to the City Council that the residence, gardens and

the grounds at 168 " -rison Avenue, known as Tanglewo be designated as a historical landmark pursuant to the provisions of Sausalito Municipal Code Title 8, Chapter 8.44; and

WHEREAS, the City Council officially recognizes and concurs with the policy determination of both the Historical Landmarks Board and the Planning Commission that the preservation and protection of this residence and its gardens should be encouraged by every reasonable means:

NOW, THEREFORE, it is hereby resolved, ordered and declared as follows:

1. That the residence, gardens and the grounds at 168 Harrison Avenue, known as "Tanglewood" is hereby designated as a historical landmark in the City of Sausalito pursuant to the provisions of Sausalito Municipal Code Title 8, Chapter 8.44 (Ordinance No. 901).

2. That the site of said landmark is all that certain property commonly known and referred to as 168 Harrison Avenue, Sausalito, California, also known as Assessor's Parcel No. 65-150-10.

3. That the purpose of the designation of the residence and grounds of the property known as 168 Harrison Avenue as a historical landmark is to specifically protect the architectural integrity of the residence and to preserve the integrity of the original designs of the separate garden beds and landscaping.

4. That the protected landscape features and accessories include but are not limited to the existing planting scheme, embroidery gardens, garden paths, garden furniture and garden statuary.

5. That any proposed construction, alteration, demolition or removal work on said landmark shall be subject to the controls set forth in Sausalito Municipal Code Title 8, Chapter 8.44 (Ordinance No. 901) and all related zoning, building, grading and tree preservation codes.

6. That a landscaping master plan be submitted discussing the proposed maintenance and replanting of the gardens as anticipated.

7. That in the event of any proposed alteration or change to the gardens and the grounds at 168 Harrison Avenue, known as Tanglewood, the Historic

Landmarks Board (HLB) will be responsible for reviewing the landscaping master plan and making recommendations to the Planning Commission based on that plan.

8. That in the event a conflict arises regarding the evolution of the landscaping at 168 Harrison Avenue, due to possible contradictions between the provisions of Ordinance 901 and Ordinance 1055, the Historic Landmarks Board will base it recommendation on the landscaping master plan and will request that a companion recommendation be sought from the Committee on Trees and Views. Both of these recommendations would be subsequently forwarded to the Planning Commission for final action.

PASSED AND ADOPTED at a meeting of the City Council of the City of Sausalito on the 19th day of February, 1991, by the following vote:

AYES: Councilmen: Buddie, Mitchell, Suckle, Sweeny, Mayor Rose

NOES: Councilmen: None

ABSENT: Councilmen: None

MAYOR OR THE CITY OF SAUSALITO

ATTEST:

CITY CLERK

PRESERVATION
ARCHITECTURE

January 14, 2014

168 Harrison Avenue, Sausalito
Project Evaluation

This effort was requested to address a City of Sausalito planning application protocol and proceeds on the basis that the property at 168 Harrison Avenue is listed on Sausalito's register of historic resources, the record of which I have carefully reviewed on behalf of the property owners, the Levins. Per the City's direction, a project that may alter the identified historic resource requires evaluation for conformance with the U. S. Secretary of the Interior's *Standards for the Treatment of Historic Properties (Standards).*

The proposed project will replace fencing around the perimeter of the subject property.

The existing fencing consists of:

- A black-painted metal picket fence, approximately 4 feet high, crossing the Harrison Avenue frontage with a short return along the driveway at the northwest corner of the site. This metal picket fencing is recent (c1980).
- Along this fence line, there are also two stone pillars framing an ornamental, wrought iron entry gate.
- The side and rear (Bulkley) property lines are fenced with a galvanized pipe and chain-link fence which is topped with barbed wire across the south side and rear property lines, plus for a short distance at the north side. The overall heights are approximately 6 feet. There is also a galvanized pipe and chain link gate at the set of steps down to Bulkley Ave. in the southeast corner of the property. These chain link fences and gate appear to date to c1960.

Neither type of existing fence is intentionally aesthetic, and both were cloaked in vegetation until recently cleared.

No fencing is identified in the historic resource record. Evidently, the existing fencing is not a character-defining or potentially historic feature. The upper (Harrison Ave.) gate and its pillars are the only ornamental feature of these enclosing fences.

The existing gate and pillars at Harrison Ave. will remain. The chain link gate at Bulkley is proposed to be replaced with a gate to match the adjacent new fencing.

The proposed replacement fencings are standard, black-painted picket fences, 6 feet tall, and would replace the existing in the existing fence locations. The proposed fence style is neutral in character, without an ornamental aesthetic, is intended to be fully cloaked in vegetation, and will be a uniform height of 6 feet. A subtle variant in the fence design is a serrated top edge atop the stretch of fence on Harrison Ave., obviously in deference to the frontage of the site.

The replacement fencing work is the only proposed work.

With respect to the *Standards*, the applicable treatment and evaluation *Standard* is that of *Rehabilitation*, which is defined as follows:

"When repair and replacement of deteriorated features are necessary; when alterations or additions to the property are planned for a new or continued use; and when its depiction at a particular period of time is not appropriate, Rehabilitation may be considered as a treatment."

446 17th Street #302 Oakland CA 94612
510.418.0285 mhulbert@earthlink.net

There is no proposed use change so there is no use related change *(Standard 1);* the extant fencing is not character-defining, so there would be no loss of distinctive features *(Standard 5)* or requisite repair or treatment measures *(Standards 6 and 7);* and there is no ground disturbance *(Standard 8).* Thus, of the ten *Rehabilitation Standards*, the five applicable to this work are each listed below, followed by an evaluation statement:

2. *The historic character of a property will be retained and preserved. The removal of distinctive materials or alteration of features, spaces, and spatial relationships that characterize a property will be avoided.*
   The proposed fencing would replace existing, non-historic fencing in its present location. As the proposed fencing will not change any landscape spaces or spatial relationships, the work meets *Standard 2.*

3. *Each property will be recognized as a physical record of its time, place, and use. Changes that create a false sense of historical development, such as adding conjectural features or elements from other historic properties, will not be undertaken.*
   The replacement fencing is a simple and clearly contemporary design without historical character or precedent, and no conjectural or salvaged features are proposed, so the work also meets *Standard 3.*

4. *Changes to a property that have acquired historic significance in their own right will be retained and preserved.*
   The extant fencing, added to the property c1960 and 1980, has not acquired significance, so its proposed removal conforms to *Standard 4.*

9. *New additions, exterior alterations, or related new construction will not destroy historic materials, features, and spatial relationships that characterize the property. The new work shall be differentiated from the old and will be compatible with the historic materials, features, size, scale and proportion, and massing to protect the integrity of the property and its environment.*
   As noted under *Standard 2,* the replacement fencing will not effect any character defining features, spaces or spatial relationships. Additionally, the proposed new fence is simply contemporary so would be clearly differentiated from older features of the subject property, thereby protecting the property's integrity and meeting *Standard 9.*

10. *New additions and adjacent or related new construction will be undertaken in a such a manner that, if removed in the future, the essential form and integrity of the historic property and its environment would be unimpaired.*
    Were the proposed replacement fencing to be removed in the future, the form and integrity of the property would be unimpaired, so the work also meets *Standard 10.*

In conclusion, since the proposed work meets each applicable *Standard*, then the proposed project meets the Secretary of the Interior's *Standards for Rehabilitation*. Thus, from an historic resources perspective, the proposed replacement fencing will have no potential detrimental effects on the property. It is a timely replacement project that will improve and re-secure the perimeter of this property.

Signed:

Mark Hulbert
Preservation Architect

CITY OF SAUSALITO
PLANNING DIVISION
MEMORANDUM

Date: January 8, 2014
To: Historic Landmarks Board (HLB)
From: Steve Padovan, Contract Planner
Subject: **HLB Review of a Design Review Permit for a new perimeter fence at 168 Harrison Avenue (APN: 065-091-10) DR 13-322**

Background:
The subject property, known as the Tanglewood Residence, is listed on the City of Sausalito Historic Resources Inventory as a Landmark site. This historic designation includes the structure and all the surrounding grounds and landscaping. As such, any exterior changes to a designated Historic Landmark site require approval of a Design Review Permit at a joint meeting of the Historic Landmarks Board and Planning Commission.

Previously, the property was owned by the University of California Regents and not subject to local regulations with regard to its use or management. However, in the past, the UC Regents would submit projects to the HLB for courtesy review. The property was recently sold by the UC Regents and is currently owned by Asriel and Carmela Levin.

Request:
The Levins have submitted a Design Review Permit to install a six-foot tall, black metal picket fence around the perimeter of their property (see **Attachment 2** for the proposal and **Attachment 3** for plans and photographs). The existing fencing is a mixture of metal cyclone wire fencing (with barbed wire in several locations), deer fencing, and a metal picket fence varying between four and seven feet in height. The new six-foot metal fencing would be placed around the entire perimeter and would be consistent in its design and construction. The primary reasons for the fence are to protect the gardens from deer, improve the aesthetics of the property and to reduce potential risk to persons or animals by removing the barbed wire.

Staff is requesting that the HLB review and comment on the proposed fencing prior to the joint meeting to address any concerns with impacts to the historic landmark property.

The contents of the City's archive files for the property located at the Community Development Department identify the following items:

1. Community Appearances and Advisory Board Approvals
    a. CAAB approval of landscape project - June 11, 1987

b. Historic Landmark Designation Application HL 90-167
City Council Resolution 4024 approved on February 19, 1991.

2. Building Permits Issued
   a. Permit #2172 – Issued in June 1956 for interior remodeling and exterior changes to windows and doors.
   b. Permit #2268 – Issued in May 1959 for new service area fence and garden retaining wall
   c. Permit #2272 – Issued in June 1959 for a new in-ground pool
   d. Permit #3032 – Issued in April 1962 for a new two-car garage
   e. Permit #3064 – Issued in May 1962 for a new dormer and attic storage space

Discussion:

Preservation Architecture's, Mark Hulbert, provided a letter received January 7, 2014 which briefly describes the existing fencing, its approximate construction period and its lack of historical significance.

Attachments:
1. Vicinity Map
2. Proposal Statement
3. Plans and Photographs
4. Letter from Mark Hulbert, Preservation Architecture dated received January 7, 2014

I:\CDD\PROJECTS - ADDRESS\H\Harrison 168\DR 13-322\HLB Memo 1-8-14.doc

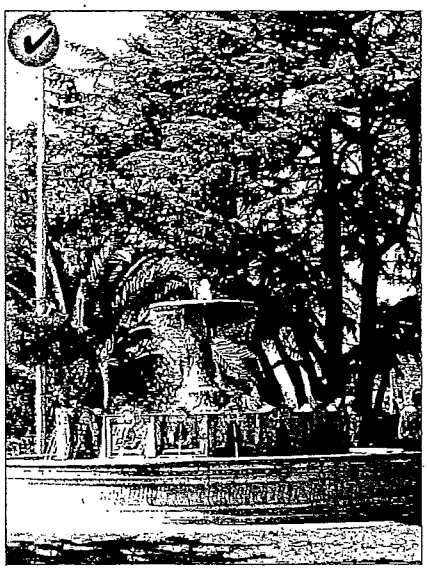

Preserve historic landscape features.

Landscape Features

Historic landscape features, including stone walls and walkways, stairways, small parks, plantings and fences are important character-defining features of many properties in Sausalito as well as in the public realm. Work that alters the historic character of these elements should be avoided.

The use of appropriate site materials is a key factor in preserving the historic character and the relationship between the buildings and their setting, and therefore new landscape designs should be designed to be compatible with their context.

2.87 Preserve historically significant landscape designs.

- Preserve masonry walls and walkways, stairways, small parks, plantings, fences and gates.
- Avoid removing mature, character-defining plantings unless they are severely damaged, aged or diseased beyond preservation.

2.88 Replace only those portions of historic landscapes that are deteriorated beyond repair.

- Any replacement materials should match the original in general character.

2.89 A replacement fence or gate should be in character with those seen historically.

- A fence is usually low to the ground (less than 40") and "transparent" in nature.
- Contemporary interpretations of traditional fences and gates may be considered when compatible with the historic context.

2.90 A replacement wall should be in character with those seen historically.

- Contemporary interpretations of masonry walls should be compatible with the historic context.

2.91 Plan new landscape elements to minimize potentially negative impacts on nearby buildings.

- Avoid new site features which have the potential to damage or obscure a historic structure.
- Select plant and tree species according to their mature size to allow for the long-term impact of mature growth.
- Avoid placing climbing plants too close to a building.
- Avoid locating plant materials which obscure significant and character-defining architectural features.

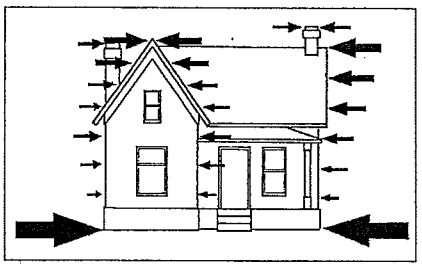

Horizontal forces of earthquakes can cause damage to a historic structure.

2.92 Select new plant materials to be compatible in character with historic features on site.

- These should also meet City guidance and/or regulations for water conservation, use of indigenous species and noninvasive characteristics.

Seismic Retrofitting

Many of Sausalito's historic buildings and structures were constructed when there was less knowledge of seismic design and building codes were less restrictive, making them vulnerable to damage in earthquakes. However, today there are methods of reducing the risk of earthquake damage. If carefully planned and executed, retrofitting techniques can upgrade the safety of a structure while at the same time being sensitive to its historic fabric. The first step in retrofitting a building is to examine the structure and identify its weak points and features that can be strengthened and reinforced. By upgrading such features as foundations, floors, ceilings, walls, columns and roofs, property owners can improve the resiliency of their historic buildings. When retrofitting a historic structure to improve its ability to withstand seismic events, any negative impacts upon historic features and building materials should be minimized.

2.93 Execute seismic retrofitting of a historic structure so that it has the least impact on the structure's character.

- Building materials used in seismic retrofitting should be located on the interior and/or blended with other existing architectural features.
- Preserving an ornamental detail by bracing it is preferred over removing it.
- See Appendix E for more information on earthquake retrofit programs.

RECEIVED

JAN 1 3 2014

CITY OF SAUSALITO
COMMUNITY DEVELOPMENT

JANUARY 13, 2014

TO: SAUSALITO PLANNING COMMISSION AND HISTORIC LANDMARKS BOARD

FROM: LISA & STAN DECK-174 HARRISON AVE. SAUSALITO

RE: 168 HARRISON FENCE-MEETING JANUARY 22, 2014

AS ONE OF THE ADJACENT PROPERTY OWNERS WE(AND ON BEHALF OF OUR OUR NEIGHBORS, THE OVERTONS-199 BULKLEY AVE., WHO ARE AWAY AND WITH WHOM WE HAVE COMMUNICATED) DO NOT HAVE A PROBLEM WITH THE DESIGN OF THE NEW FENCE. WE HAVE SEEN THE UNINSTALLED FENCE SECTIONS LAYING IN THE FRONT YARD OF THE SUBJECT PROPERTY. WE HAVE SPOKEN TO CARMELA LEVIN, THE OWNER, ABOUT THE 2 FOLLOWING CONCERNS:

1. THERE ARE 2 WATER LINES UNDER OR NEAR THE FENCE LINE WHICH SERVE OUR HOME AND THE OVERTON'S HOME. PRECAUTION SHOULD BE TAKEN SO THAT THE PIPES ARE NOT BROKEN OR DAMAGED DURING OR AS A RESULT OF THE FENCE CONSTRUCTION.

2. WE HAVE IVY RUNNING UP TO THE TOP OF THE EXISTING FENCE WHICH PROVIDES ADDITIONAL SCREENING BETWEEN OUR PROPERTY AND THE SUBJECT PROPERTY. WHEN THE NEW FENCE IS CONSTRUCTED AND THE IVY REMOVED, WE HAVE BEEN ASSURED THAT NEW PLANTING WILL BE DONE IN A TIMELY MANNER ON THE SUBJECT PROPERTY ALONG THE FENCE LINE TO REACH AT LEAST THE TOP OF THE NEW FENCE. WE LOOK FORWARD TO A MUTUALLY AGREEABLE SCREENING PLAN WHICH RESTORES PRIVACY ALONG THE FENCE LINE BETWEEN OUR PROPERTY AND 168 HARRISON AVENUE. PHOTO BELOW SHOWS SECTION OF FENCE FROM OUR SIDE.

Lucinda B. Watson

161 Harrison Avenue

Sausalito, CA.94965

203-940-1980

lucindabwatson@gmail.com

The City of Sausalito

Steve Padovan

Contract Planner

420 Litho Street

Sausalito, CA 94965

Dear Members of the Landmark and City Planning Board:

I am writing to express concern about the proposed fence at Tanglewood: the historic home and garden at 168 Harrison Avenue. As the owner of 161 Harrison Avenue, I do have a vested interest in what happens across the street. The University of California maintained the property quite well for many years but once the house was placed on the market the upkeep began to taper off.

The new owners did not irrigate the property and the garden began to die. Many plants and trees turned brown and deer invaded the garden.

At this point I photographed the garden and the dead areas and submitted a report to the City of Sausalito. The new owners were asked to care for the garden by turning on the irrigation system and hiring a competent gardener. Though the garden has been cleaned up and is apparently being maintained, there are noticeable areas of neglect which concern me.

As this garden has been declared a "Historical Garden" the new owners have a responsibility to preserve the plants as well as possible. This is not being done. The new fence is not appropriate for this historic site as it is too tall and very unsightly. The fence in place now is in keeping with the garden and historic nature of the property. I would hate to have a tall, black fence installed which will block the garden from those on the street.

The new owners have stated it is their desire to have a taller fence to prevent deer from entering the garden. I would point out that the existing fence has been in place for many years while the garden flourished: trees bloomed and plants grew and developed. The deer problem could be easily solved by allowing a dog to inhabit the property for a week or so. I would volunteer one of ours for this purpose.

My point in writing this letter is to express a deep concern for the future of Tanglewood: both the house and gardens. The new owners have demonstrated no willingness to work with the neighbors or the city in preserving this wonderful treasure. In fact, the opposite is true. One neighbor asked to see the fence before it was installed and Mrs. Levin said they could see it once it was installed.

I am registering my concern respectfully with the City of Sausalito about the preservation of Tanglewood and its gardens.

I hope that you consider limiting the fence height particularly along Harrison Avenue in order to maintain the historic feel of the property. It is one of the few properties of this type left in the area and much time was spent in designating it a historic landmark. I also hope that you continue to monitor the use and maintenance of the property so that more of the garden is not lost, and the house remains true to character.

Lucinda Watson

Owner- 161 Harrison Avenue

BLANK