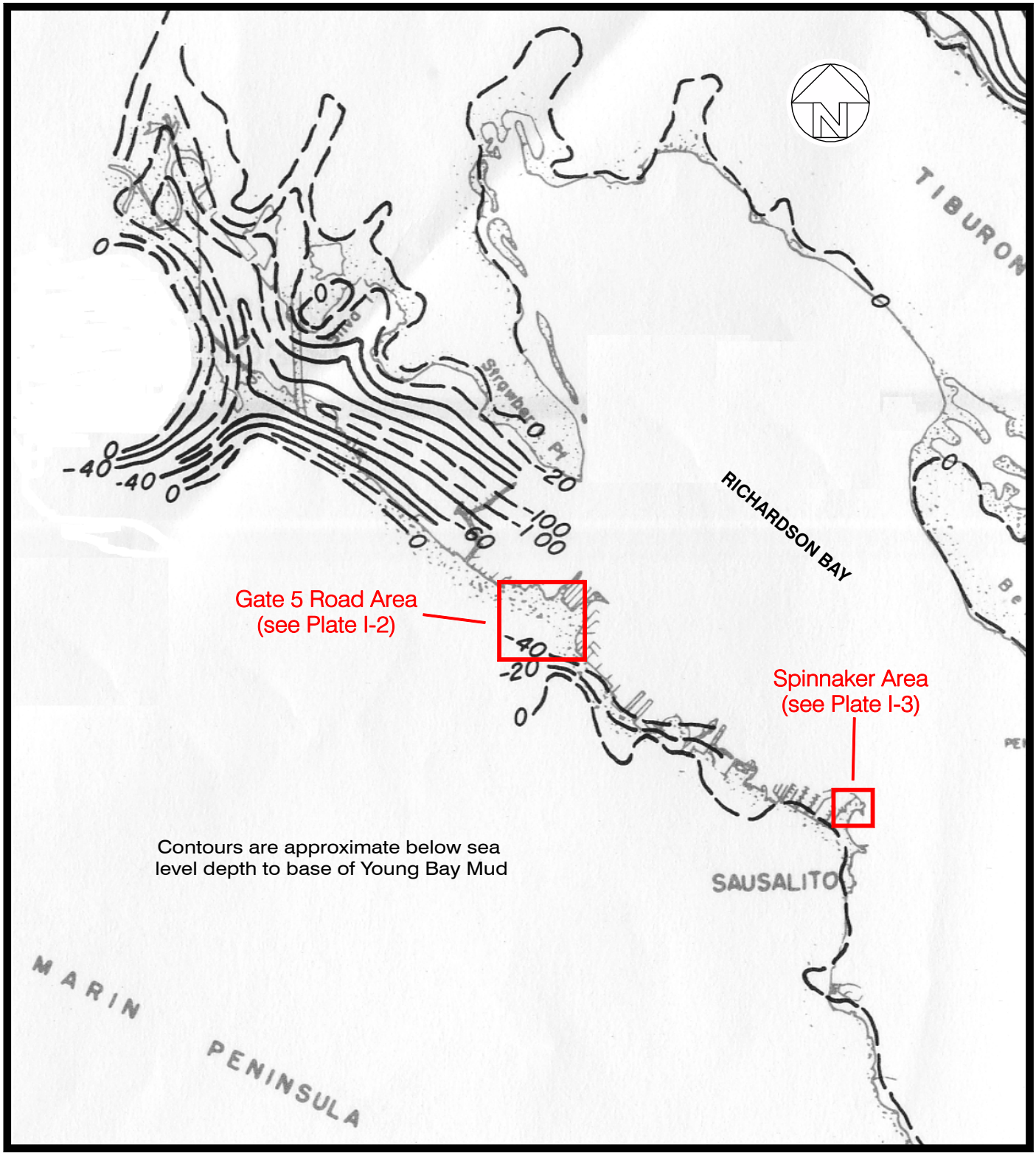

Modified from CDMG (1969).

DCM | GEOENGINEERS

FILE NO. 18337-001-00 | AUGUST 2009

WEST YOST ASSOCIATES

City of Sausalito
Priority 1 Sewer Replacement
Sausalito, California

BAY MUD MAP

PLATE NO.

I-5

(COLOR PLATE)

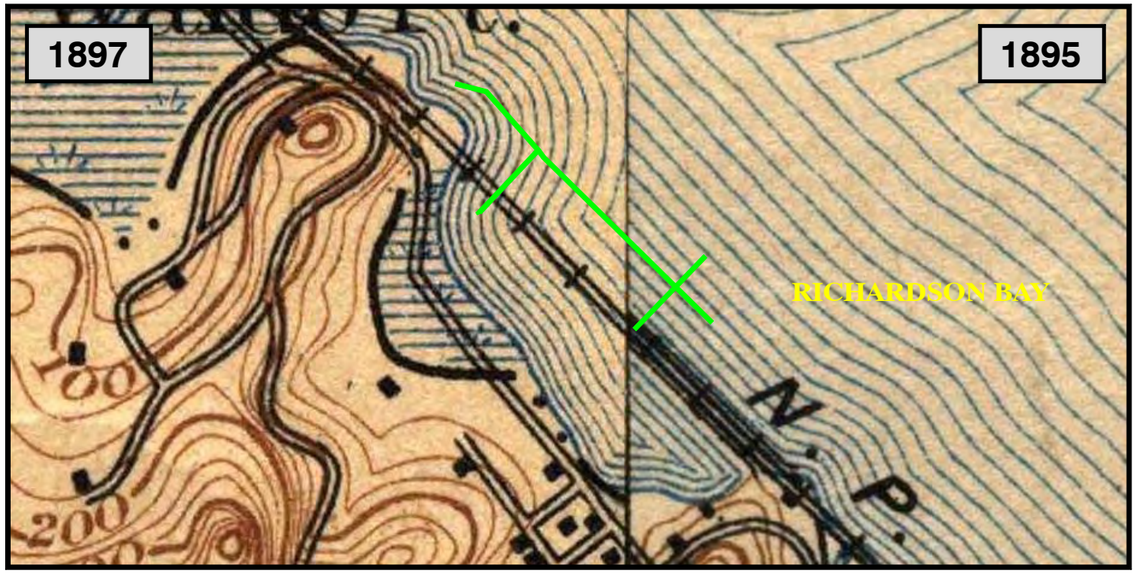

U.S.G.S. Tamalpais (1897) & San Francisco (1895) 15 Min. Quadrangles.

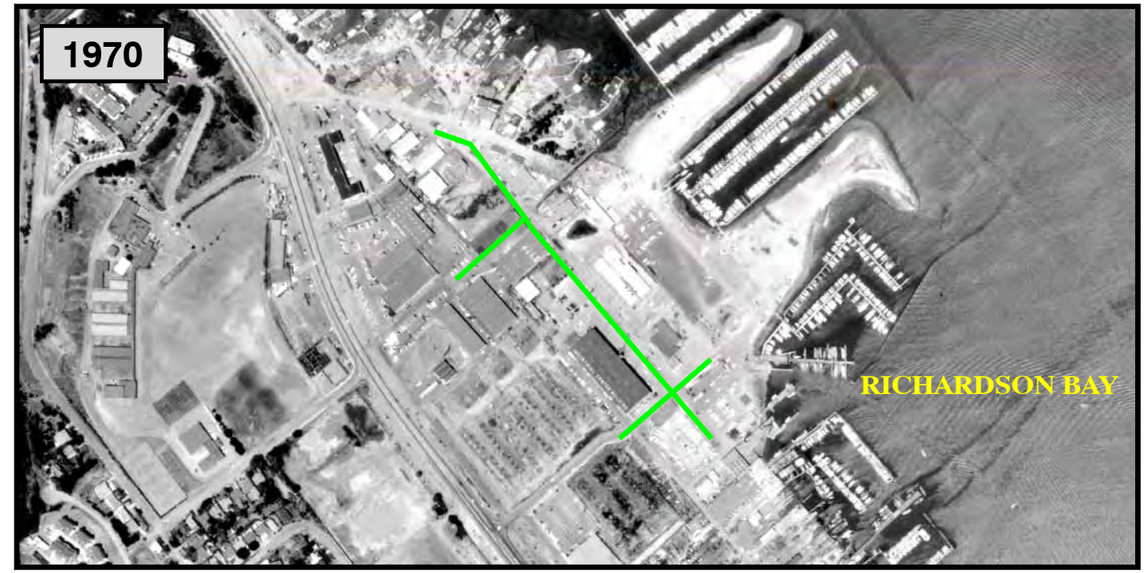

Pacific Aerial Surveys, AV-957-07-25, flown 6-12-70.

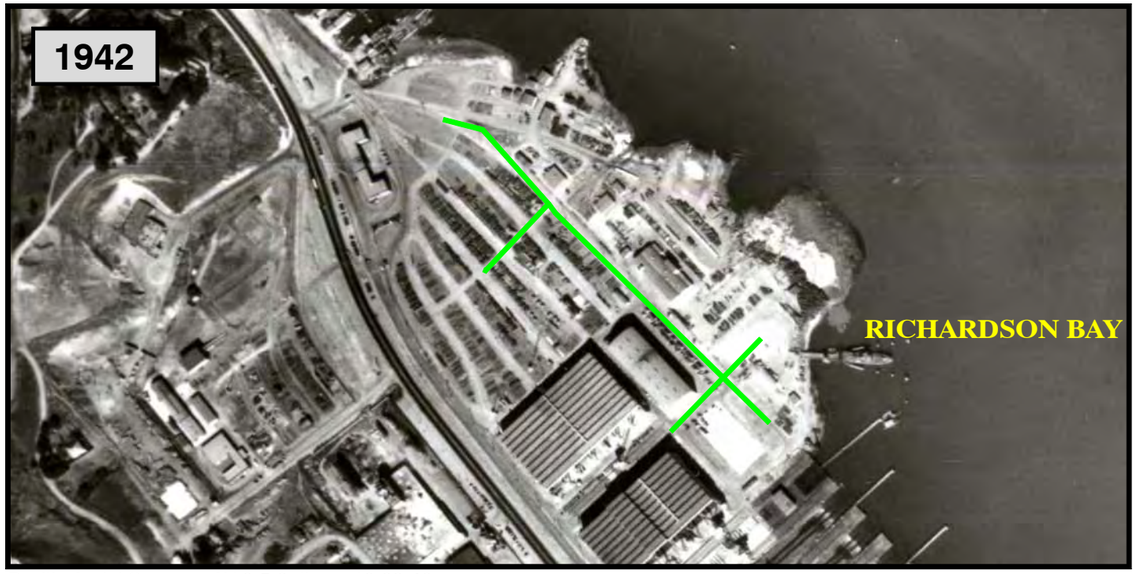

Pacific Aerial Surveys, AV 9-5-3, flown 10-28-46.

- Project Alignment

DCM | GEOENGINEERS

FILE NO. 18337-001-00 | AUGUST 2009

WEST YOST ASSOCIATES
City of Sausalito
Priority 1 Sewer Replacement
Sausalito, California
HISTORIC TOPO MAPS & AERIAL PHOTOS - GATE 5 ROAD AREA

PLATE NO.
I-6
(COLOR PLATE)

U.S.G.S. San Francisco (1895) 15 Min. Quadrangle.

Pacific Aerial Surveys, AV-957-07-25, flown 6-12-70.

Pacific Aerial Surveys, AV 9-5-3, flown 10-28-46.

- Project Alignment

DCM | GEOENGINEERS

FILE NO. 18337-001-00 | AUGUST 2009

WEST YOST ASSOCIATES
City of Sausalito
Priority 1 Sewer Replacement
Sausalito, California
HISTORIC TOPO MAPS & AERIAL PHOTOS - SPINNAKER AREA

PLATE NO.
I-7
(COLOR PLATE)

APPENDIX A

DCM | GeoEngineers

KEY TO PROJECT BORING LOGS IN APPENDIX B

- Grab sample
- 1.4" I.D./2" O.D. Standard Penetration Test (ASTM D1586) sampler (SPT)
- 2.5" I.D./3" O.D. Modified California sampler (MCS) with brass liners
- 2.9" I.D./3" O.D. Shelby tube sample
- Water level measured at end of drilling
- Projected project pipeline

RELATIVE DENSITY		CONSISTENCY		
SANDS AND GRAVELS	SPT, N	SILTS AND CLAYS	SPT, N	UNCONFINED COMPRESSIVE STRENGTH, tsf
VERY LOOSE	0-4	VERY SOFT	0-2	0-0.25
LOOSE	4-10	SOFT	2-4	0.25-0.50
MEDIUM DENSE	10-30	MEDIUM STIFF	4-8	0.50-1.00
DENSE	30-50	STIFF	8-15	1.00-2.00
VERY DENSE	50+	VERY STIFF	15-30	2.00-4.00
		HARD	30+	>4.00

Reference: Terzaghi, K. and Peck, R., SOIL MECHANICS IN ENGINEERING PRACTICE, 2nd ed., John Wiley and Sons, New York, 1967. Page 341 Table 45.1 and pp. 347 Table 45.2.

CONSTITUENT DESCRIPTIONS

DESCRIPTION	CRITERIA
TRACE	less than 5%
FEW	5% to 10%
LITTLE	15% to 25%
SOME	30% to 45%
MOSTLY	50% to 100%

Reference: ASTM D2488, Note 15

MOISTURE CONDITION

DESCRIPTION	CRITERIA
DRY	Absence of moisture, dusty, dry to the touch
MOIST	Damp but no visible water
WET	Visible free water, usually soil is below water table

Reference: ASTM D2488, Table 3 - Criteria for Describing Moisture Condition

GROUND BEHAVIOR	CLASSIFICATION
Ground that can be excavated without initial support and where shoring can be installed before the ground starts to move. For example, unfissured hard clay when not highly overstressed.	Firm
Ground of which chunks or flakes begin to fall off excavation walls. If raveling starts within a few minutes of excavation then it is "fast" raveling; otherwise, it is "slow" raveling. Silts and sands with clay binder may be fast raveling. Stiff fissured clays may be slow or fast raveling depending upon the degree of overstress.	Raveling
Ground that squeezes or plastically extrudes into excavations without visible fracturing. Can occur at shallow to medium depth in very soft to medium stiff clay, and can occur in stiff to hard clay under high overstress.	Squeezing
Ground consisting of clean dry granular material (e.g., sand and gravel) that moves by gravity to its angle of repose.	Running
Ground in a fluid-like condition (e.g., a disturbed mixture of predominantly silt, sand and/or gravel with water), that flows across pressure gradients.	Flowing
Ground that expands in volume due to the absorption of water (e.g., clays).	Swelling

Reference: Modified from Heuer, R.E., 1974, Important ground parameters in soft ground tunneling, Subsurface exploration for underground excavation and heavy construction, New England College, Henniker, New Hampshire, American Society of Civil Engineers, New York, P. 41-55.

NOTES:

1. Lines separating strata in the logs represent approximate boundaries and are dashed where strata change depth is less certain. Strata change may be gradual.
2. Penetration Resistance (blows/ft.) are the last 12" of an 18" drive using a 140-pound cathead hammer falling 30 inches per blow unless noted otherwise. The Penetration Resistance values noted on the logs are actual blows per foot of penetration for the respective sampler type (i.e., MCS sampler penetration resistance blow counts have not been reduced to approximate SPT sampler "N" values).
3. All borings were made with a Mobile B-24 drill rig using 5-inch diameter continuous flight solid stem augers.
4. See plates in Appendix C for grain size definitions and nomenclature.

DCM GEOENGINEERS

FILE NO. 18337-001-00 | AUGUST 2009

WEST YOST ASSOCIATES
City of Sausalito
Priority 1 Sewer Replacement
Sausalito, California

BORING LOG LEGEND

PLATE NO.
A-1
(1 of 2)

KEY TO PROJECT BORING LOGS IN APPENDIX B (Cont'd)

UNIFIED SOIL CLASSIFICATION SYSTEM

CRITERIA FOR ASSIGNING GROUP SYMBOLS AND GROUP NAMES [A]				SOIL CLASSIFICATION	
				GROUP SYMBOL	GROUP NAME [B]
COARSE-GRAINED SOILS More than 50% retained on No. 200 sieve	**GRAVELS** More than 50% of coarse fraction retained on No. 4 sieve	**Clean Gravels** < 5% fines [C]	$Cu \geq 4$ and $1 \leq Cc \leq 3$ [E]	**GW**	Well-graded gravel [F]
			$Cu < 4$ and/or $1 > Cc > 3$ [E]	**GP**	Poorly graded gravel [F]
		Gravels with Fines > 12% fines [C]	Fines classify as ML or MH	**GM**	Silty gravel [F,G,H]
			Fines classify as CL or CH	**GC**	Clayey gravel [F,G,H]
	SANDS 50% or more of coarse fraction passes No. 4 sieve	**Clean Sands** < 5% fines [D]	$Cu \geq 6$ and $1 \leq Cc \leq 3$ [E]	**SW**	Well-graded sand [I]
			$Cu < 6$ and/or $1 > Cc > 3$ [E]	**SP**	Poorly graded sand [I]
		Sands with Fines > 12% fines [D]	Fines classify as ML or MH	**SM**	Silty sand [G,H,I]
			Fines classify as CL or CH	**SC**	Clayey sand [G,H,I]
FINE-GRAINED SOILS 50% or more passes the No. 200 sieve	**SILTS AND CLAYS** Liquid limit ≤ 50	**Inorganic**	PI > 7 plots on or above "A" line [J]	**CL**	Lean clay [K,L,M]
			PI < 4 plots below "A" line [J]	**ML**	Silt [K,L,M]
		Organic	Liquid limit-oven dried / Liquid limit-not dried < 0.75	**OL**	Organic Clay [K,L,M,N]
					Organic Silt [K,L,M,O]
	SILTS AND CLAYS Liquid limit > 50	**Inorganic**	PI plots on or above "A" line	**CH**	Fat clay [K,L,M]
			PI plots below "A" line	**MH**	Elastic silt [K,L,M]
		Organic	Liquid limit-oven dried / Liquid limit-not dried < 0.75	**OH**	Organic Clay [K,L,M,P]
					Organic Silt [K,L,M,Q]
HIGHLY ORGANIC SOILS		**Primarily organic matter, dark color and organic odor**		**PT**	Peat

NOTES:

A Based on the material passing the 3-in. (75mm) sieve.

B If field sample contained cobbles or boulders, or both, add "with cobbles or boulders, or both" to group name.

C Gravels with 5% to 12% fines require dual symbols:
GW-GM well-graded gravel with silt
GW-GC well-graded gravel with clay
GP-GM poorly graded gravel with silt
GP-GC poorly graded gravel with clay

D Sands with 5% to 12% fines require dual symbols:
SW-SM well-graded sand with silt
SW-SC well-graded sand with clay
SP-SM poorly graded sand with silt
SP-SC poorly graded sand with clay

E $Cu = \frac{D_{60}}{D_{10}}$ $Cc = \frac{(D_{30})^2}{D_{10} \times D_{60}}$

F If soil contains ≥ 15% sand, add "with sand" to group name.

G If fines classify as CL-ML, use dual symbol GC-GM, or SC-SM.

H If fines are organic, add "with organic fines" to group name.

I If soil contains ≥ 15% gravel, add "with gravel" to group name.

J If Atterberg limits plot in hatched area, soil is a CL-ML (silty clay).

K If soil contains 15% to 29% plus No. 200,add "with sand" or "with gravel", whichever is predominant.

L If soil contains ≥ 30% plus No.200, predominantly sand, add "sandy" to group name.

M If soil contains ≥ 30% plus No.200, predominantly gravel, add "gravelly" to group name.

N PI ≥ 4 and plots on or above "A" line.

O PI < 4 or plots below "A" line.

P PI plots on or above "A" line.

Q PI plots below "A" line.

DCM GEOENGINEERS

FILE NO. 18337-001-00 | AUGUST 2009

WEST YOST ASSOCIATES
City of Sausalito
Priority 1 Sewer Replacement
Sausalito, California

BORING LOG LEGEND

PLATE NO.
A-1
(2 of 2)

APPENDIX B

DCM | GeoEngineers

LOG OF BORING B-1 ①

LOCATION: See Plate I-1
④ BORING SURFACE ELEVATION: 10'
PROJECTED STATION: 15 + 95
PLANNED PIPELINE INVERT ELEVATION: 2'

DEPTH feet	SAMPLE NO.	TYPE	PENETRATION RESISTANCE blows/ft.	GROUNDWATER ③	DESCRIPTION ②	MOISTURE %	DRY DENSITY lbs./ft.³	LIQUID LIMIT	PLASTICITY INDEX	GRAIN SIZE Gravel (> #4 sieve) %	GRAIN SIZE Sand (#4 to #200 sieve) %	GRAIN SIZE Fines (< #200 sieve) %	UNCONFINED COMPRESSIVE STRENGTH kips/ft.²	DIRECT SHEAR Cohesion p.s.f.	DIRECT SHEAR Internal Friction Angle
					GATE 5 ROAD: 10 inches asphalt concrete over 20 inches aggregate base - base layer contains few to some coarse gravel										
	1				**CLAYEY SAND WITH GRAVEL (SC) - FILL** - dark yellowish brown - fine sand - coarse-grained angular gravel - silty - dry										
5	2		6		**CLAYEY GRAVEL WITH SAND (GC) - FILL** - dark gray - few to little medium and coarse sand - very loose to loose grading to medium dense - wet - Sandy Lean Clay (CL) from 8 - 8½' Borehole sloughing below ~5' (see table below) ⑤	10	129			45	39	16			
	3		4												
10	4		7												
	5		10												
15	6		8		**CLAYEY SAND WITH GRAVEL (SC) - FILL** - dark gray - medium to coarse sand - loose - wet	12									
20					**BOTTOM OF BORING AT 19 FEET**										
25															

SLOUGH DEPTHS ON SAMPLING

Sample No.	Slough Depth*
6	8'

*Slough depth measured up from intended sample depth.

NOTES
① Drilled 7/6/09 using a Mobile B-24, 5" diameter solid stem augers, and a 30" drop by 140 lb. cathead sampling hammer.
② See report text in Section I and plates in Appendices A and C for definitions, lab test results, and additional soil descriptions.
③ Free groundwater level measured in boring at depth of 6½ feet after drilling. Static equilibrium groundwater depth is unknown.
④ Rounded from in-progress design plans (West Yost Associates, 2009).
⑤ Projected planned 8" ID pipeline.

DCM GEOENGINEERS

WEST YOST ASSOCIATES
City of Sausalito
Priority 1 Sewer Replacement
Sausalito, California

BORING LOG B-1

FILE NO. 18337-001-00 | AUGUST 2009

PLATE NO.
B-1

LOG OF BORING B-2 ①

LOCATION: See Plate I-1
④ BORING SURFACE ELEVATION: 8'
PROJECTED STATION: 21 + 00
PLANNED PIPELINE INVERT ELEVATION: -5'

DEPTH feet	SAMPLE NO.	TYPE	PENETRATION RESISTANCE blows/ft.	GROUNDWATER ③	DESCRIPTION ②	MOISTURE %	DRY DENSITY lbs./ft.³	LIQUID LIMIT	PLASTICITY INDEX	GRAIN SIZE Gravel (> #4 sieve) %	GRAIN SIZE Sand (#4 to #200 sieve) %	GRAIN SIZE Fines (< #200 sieve) %	UNCONFINED COMPRESSIVE STRENGTH kips/ft.²	DIRECT SHEAR Cohesion p.s.f.	DIRECT SHEAR Internal Friction Angle
	1				**GATE 5 ROAD:** 6 inches asphalt concrete over 24 inches aggregate base										
5	2		12		**GRAVELLY LEAN CLAY WITH SAND (CL) - FILL** - brownish yellow to dark brownish yellow, becoming reddish with depth - angular gravel - fine sand - medium to low plasticity - stiff - dry to moist			40	18						
10	3 4		8 4		**POORLY GRADED GRAVEL (GP) - FILL** - dark brown - angular gravel - very loose to loose - wet Borehole sloughing below 5½' (see table below)					86	10	4			
15	5		2		**POORLY GRADED SAND (SP) - FILL** - brown - trace gravel - fine to medium sand - loose - wet ⑤	20									
	6		5		**CLAYEY GRAVEL WITH SAND (GC) - FILL** - dark grayish brown - subangular coarse gravel - loose - wet	14									
20 25					**BOTTOM OF BORING AT 18½ FEET**										

SLOUGH DEPTHS ON SAMPLING

Sample No.	Slough Depth*
3	1½'
4	3'
5	6½'

*Slough depth measured up from intended sample depth.

NOTES
① Drilled 7/6/09 using a Mobile B-24, 5" diameter solid stem augers, and a 30" drop by 140 lb. cathead sampling hammer.
② See report text in Section I and plates in Appendices A and C for definitions, lab test results, and additional soil descriptions.
③ Free groundwater level measured in boring at depth of 4 feet after drilling. Static equilibrium groundwater depth is unknown.
④ Rounded from in-progress design plans (West Yost Associates, 2009).
⑤ Projected planned 8" ID pipeline.

DCM | GEOENGINEERS

WEST YOST ASSOCIATES
City of Sausalito
Priority 1 Sewer Replacement
Sausalito, California

BORING LOG B-2

FILE NO. 18337-001-00 | AUGUST 2009

PLATE NO.
B-2

LOG OF BORING B-3A①

LOCATION: See Plate I-1
④ BORING SURFACE ELEVATION: 7½'
PROJECTED STATION: 46 + 60
PLANNED PIPELINE INVERT ELEVATION: 1'

DEPTH feet	SAMPLE NO.	TYPE	PENETRATION RESISTANCE blows/ft.	GROUNDWATER ③	DESCRIPTION ②	MOISTURE %	DRY DENSITY lbs./ft.³	LIQUID LIMIT	PLASTICITY INDEX	GRAIN SIZE Gravel (> #4 sieve) %	GRAIN SIZE Sand (#4 to #200 sieve) %	GRAIN SIZE Fines (< #200 sieve) %	UNCONFINED COMPRESSIVE STRENGTH kips/ft.²	DIRECT SHEAR Cohesion p.s.f.	DIRECT SHEAR Internal Friction Angle
					HARBOR DR: 6 inches asphalt concrete over 18 inches aggregate base										
					LEAN CLAY WITH SAND (CL) - FILL - yellowish brown - trace gravel - medium grained sand - medium plasticity - moist										
5					**LEAN CLAY WITH SAND (CL) - FILL** - dark yellowish brown and dark gray - few to some jumbled pockets of sand and gravel - dry to moist ⑤										
	1		9		**LEAN CLAY (CL) - FILL** - light olive brown - trace medium sand-sized to coarse gravel-sized pieces of brick - few fine sand - medium plasticity - medium stiff - moist	21	105							480	16°
	2		5												
10					**LEAN CLAY (CL) TO FAT CLAY (CH) - FILL** - dark gray to dark greenish gray and few dark yellowish brown - trace organics - trace shells - trace gravel - fine to medium sand; content varies throughout from trace to little - medium to high plasticity - soft to medium stiff - moist to wet										
	3		6			21	109						1.40		
	4		6					82	49						
15					**ORGANIC CLAY (OH) - FILL** - black - organic odor - high plasticity - medium stiff - moist to wet										
	5		pushed		**LEAN CLAY (CL) - FILL** - dark grayish brown - trace to few fine gravel - trace to few fine sand - medium plasticity - medium stiff - wet										
	6		8												
20					**SANDY LEAN CLAY WITH GRAVEL (CL) - FILL** - dark greenish gray to dark bluish gray - coarse sand - angular gravel - low to medium plasticity - medium stiff - wet										
					BOTTOM OF BORING AT 20 FEET										
25															

CORROSION TEST
Samples 1 & 2
See Plate C-5

LL RATIO
O.D. / N.D. = 0.67

NOTES
① Drilled 7/6/09 using a Mobile B-24, 5" diameter solid stem augers, and a 30" drop by 140 lb. cathead sampling hammer.
② See report text in Section I and plates in Appendices A and C for definitions, lab test results, and additional soil descriptions.
③ Free groundwater level measured in boring at depth of 7 feet after drilling. Static equilibrium groundwater depth is unknown.
④ Rounded from in-progress design plans (West Yost Associates, 2009).
⑤ Projected planned 8" ID pipeline.

DCM | GEOENGINEERS

FILE NO. 18337-001-00 | AUGUST 2009

WEST YOST ASSOCIATES
City of Sausalito
Priority 1 Sewer Replacement
Sausalito, California

BORING LOG B-3A

PLATE NO.
B-3A

LOG OF BORING B-3B ①

LOCATION: See Plate I-1
④ BORING SURFACE ELEVATION: 7½'
PROJECTED STATION: 46 + 60
PLANNED PIPELINE INVERT ELEVATION: 1'

DEPTH feet	SAMPLE NO.	TYPE	PENETRATION RESISTANCE blows/ft.	GROUNDWATER ③	DESCRIPTION ②	MOISTURE %	DRY DENSITY lbs./ft.³	LIQUID LIMIT	PLASTICITY INDEX	GRAIN SIZE Gravel (> #4 sieve) %	GRAIN SIZE Sand (#4 to #200 sieve) %	GRAIN SIZE Fines (< #200 sieve) %	UNCONFINED COMPRESSIVE STRENGTH kips/ft.²	DIRECT SHEAR Cohesion p.s.f.	DIRECT SHEAR Internal Friction Angle
					HARBOR DR: 6 inches asphalt concrete over 16 inches aggregate base										
	1	X			**LEAN CLAY WITH SAND (CL) - TRENCH BACKFILL** - yellowish brown - medium plasticity - trace gravel - moist - medium grained sand	21		47	21						
5					**BOTTOM OF BORING AT 3½ FEET** ⑤										
10															
15															
20															
25															

NOTES
① Drilled 7/9/09 using a Mobile B-24, 5" diameter solid stem augers, and a 30" drop by 140 lb. cathead sampling hammer.
② See report text in Section I and plates in Appendices A and C for definitions, lab test results, and additional soil descriptions.
③ Free groundwater level was not encountered during drilling. Static equilibrium groundwater depth is unknown.
④ Rounded from in-progress design plans (West Yost Associates, 2009).
⑤ Existing Priority pipeline to be replaced with planned 8" ID pipeline.

DCM GEOENGINEERS

WEST YOST ASSOCIATES
City of Sausalito
Priority 1 Sewer Replacement
Sausalito, California

BORING LOG B-3B

FILE NO. 18337-001-00 | AUGUST 2009

PLATE NO.
B-3B

LOG OF BORING B-4 ①

LOCATION: See Plate I-1
BORING SURFACE ELEVATION: 11'
PROJECTED STATION: 42 + 60
PLANNED PROFILE D INVERT ELEVATION: 1½'

DEPTH feet	SAMPLE NO.	TYPE	PENETRATION RESISTANCE blows/ft.	GROUNDWATER ③	DESCRIPTION ②	MOISTURE %	DRY DENSITY lbs./ft.³	LIQUID LIMIT	PLASTICITY INDEX	GRAIN SIZE Gravel (> #4 sieve) %	GRAIN SIZE Sand (#4 to #200 sieve) %	GRAIN SIZE Fines (< #200 sieve) %	UNCONFINED COMPRESSIVE STRENGTH kips/ft.²	DIRECT SHEAR Cohesion p.s.f.	DIRECT SHEAR Internal Friction Angle
	1				**HARBOR DR:** 4 inches asphalt concrete over 22 inches aggregate base										
	2		25		**LEAN CLAY (CL) - FILL** - very dark brown - medium plasticity - trace sand and fine gravel - dry										
5	3		10		**LEAN CLAY WITH SAND (CL) - FILL** - dark gray - medium plasticity - angular gravel - moist - fine gravel to cobble at 3½'; broken by sampler - very stiff					38	44	18			
	4		10		**CLAYEY SAND WITH GRAVEL (SC) - FILL** - brown with yellowish brown splotches - very loose to loose - all sizes sand and gravel - moist	12	124			54	28	18			
10	5		4		**CLAYEY GRAVEL WITH SAND (GC) - FILL** - brown - very loose to loose - angular to subrounded gravel - wet - ~2½" gravel near 9'					47	32	21			
15	6		7		**SILTY SAND (SM) - FILL** - very dark gray - trace fine angular gravel - coarse sand - loose - wet										
	7		4		**SILTY SAND WITH GRAVEL (SM) - FILL** - brown - fine angular gravel - coarse sand - very loose to loose - wet										
20					**BOTTOM OF BORING AT 20 FEET**										
25															

Borehole sloughing below 7' (see table below) ⑤

SLOUGH DEPTHS ON SAMPLING

Sample No.	Slough Depth*
4	¾'
6	6'

*Slough depth measured up from intended sample depth.

NOTES
① Drilled 7/6/09 using a Mobile B-24, 5" diameter solid stem augers, and a 30" drop by 140 lb. cathead sampling hammer.
② See report text in Section I and plates in Appendices A and C for definitions, lab test results, and additional soil descriptions.
③ Free groundwater level measured in boring at depth of 6 feet after drilling. Static equilibrium groundwater depth is unknown.
④ Rounded from in-progress design plans (West Yost Associates, 2009).
⑤ Projected planned 8" ID pipeline.

DCM GEOENGINEERS

FILE NO. 18337-001-00 | AUGUST 2009

WEST YOST ASSOCIATES
City of Sausalito
Priority 1 Sewer Replacement
Sausalito, California

BORING LOG B-4

PLATE NO.
B-4

LOG OF BORING B-5 ①

LOCATION: See Plate I-1
④ BORING SURFACE ELEVATION: 8'
PROJECTED STATION: 20 + 75
PLANNED PIPELINE INVERT ELEVATION: 4'

DEPTH feet	SAMPLE NO.	TYPE	PENETRATION RESISTANCE blows/ft.	GROUNDWATER ③	DESCRIPTION ②	MOISTURE %	DRY DENSITY lbs./ft.³	LIQUID LIMIT	PLASTICITY INDEX	GRAIN SIZE Gravel (> #4 sieve) %	GRAIN SIZE Sand (#4 to #200 sieve) %	GRAIN SIZE Fines (< #200 sieve) %	UNCONFINED COMPRESSIVE STRENGTH kips/ft.²	DIRECT SHEAR Cohesion p.s.f.	DIRECT SHEAR Internal Friction Angle
					SPINNAKER DR: 9 inches asphalt concrete over 5 inches aggregate base										
	1		30		**LEAN CLAY (CL) - FILL** - grayish brown - broken fine gravel to cobble broken at 3¾' - trace fine sand and gravel - cemented from 3-3½' - medium plasticity - very stiff - moist ⑤	12	118	43	18						
	2		5		**LEAN CLAY (CL) - FILL** - dark brown with yellowish brown and grayish green mottles - trace to few coarse sand - trace to few fine gravel - low plasticity - medium stiff - moist					48	34	18			
5															
	3		6		**CLAYEY GRAVEL WITH SAND (GC) - FILL** - very dark gray - angular to subangular gravel - all grades sand - loose	21	105						1.24		
	4		7		**LEAN TO FAT CLAY WITH SAND (CL/CH) - FILL** - mostly dark greenish gray, little very dark gray and little green - soil colors layerd at arbitrary angles - green layer has trace to few fines - trace broken shells at 9' - mostly grayish green below 9' with trace coarse sand and trace coarse gravel - medium to low plasticity - soft to medium stiff - wet - wood found at 10½'										
10															
	5		1			48	73								
	6		pushed												
15	7		11		**ORGANIC CLAY (OH) - FILL & POSSIBLY BAY MUD** - dark greenish gray - trace shells - trace fine sand - high plasticity - very soft - wet - Sample 6 stopped by wood found from 14½ to 16' in Sample 7 - Sample 8 contains some to mostly clam shell fragments										
	8		pushed												
20															
					BOTTOM OF BORING AT 21 FEET										
25															

CORROSION TEST
Samples 3 & 4
See Plate C-5

NOTES
① Drilled 7/9/09 using a Mobile B-24, 5" diameter solid stem augers, and a 30" drop by 140 lb. cathead sampling hammer.
② See report text in Section I and plates in Appendices A and C for definitions, lab test results, and additional soil descriptions.
③ Free groundwater level measured in boring at depth of 7 feet after drilling. Static equilibrium groundwater depth is unknown.
④ Rounded from in-progress design plans (West Yost Associates, 2009).
⑤ Projected planned 8" ID pipeline.

DCM | GEOENGINEERS

FILE NO. 18337-001-00 | AUGUST 2009

WEST YOST ASSOCIATES
City of Sausalito
Priority 1 Sewer Replacement
Sausalito, California

BORING LOG B-5

PLATE NO.
B-5

LOG OF BORING B-6 ①

LOCATION: See Plate I-1
④ BORING SURFACE ELEVATION: 12½'
PROJECTED STATION: 12 + 65
PLANNED PROFILE G INVERT ELEVATION: 2½'

DEPTH feet	SAMPLE NO.	TYPE	PENETRATION RESISTANCE blows/ft.	GROUNDWATER ③	DESCRIPTION ②	MOISTURE %	DRY DENSITY lbs./ft.³	LIQUID LIMIT	PLASTICITY INDEX	GRAIN SIZE Gravel (> #4 sieve) %	GRAIN SIZE Sand (#4 to #200 sieve) %	GRAIN SIZE Fines (< #200 sieve) %	UNCONFINED COMPRESSIVE STRENGTH kips/ft.²	DIRECT SHEAR Cohesion p.s.f.	DIRECT SHEAR Internal Friction Angle
					HUMBOLDT AVE: 6 inches asphalt concrete over 11 inches aggregate base										
					CLAYEY SAND (SC) - FILL - brown - few gravel - dry										
	1		31		**WELL-GRADED GRAVEL WITH SILT AND SAND (GW-GM) - FILL**	6	120								
5	2		8		- brownish yellow - localized pockets of angular gravel - loose to medium dense - dry					57	36	7			
	3		10		**WELL-GRADED GRAVEL WITH SILT AND SAND (GW-GM) - FILL** - brownish yellow - gravels mostly rounded - loose	8	113						0.63		
10	4		8	▼	- moist ⑤					58	34	8			
	5		10		**WELL-GRADED GRAVEL WITH SAND (GW) - FILL** - yellowish brown - angular to rounded grains - loose					77	19	4			
15	6		5		- wet - few to little fines at 14½' Borehole sloughing below 12' (see table below)										
	7		2		**FAT CLAY (CH) - BAY MUD** - very dark brown - trace fine angular gravel - trace sand - medium to high plasticity - very soft to soft - wet	44									
20															
25					**BOTTOM OF BORING AT 21.5 FEET**										

SLOUGH DEPTHS ON SAMPLING

Sample No.	Slough Depth*
6-5	1'
6-6	2½'

*Slough depth measured up from intended sample depth.

NOTES
① Drilled 7/9/09 using a Mobile B-24, 5" diameter solid stem augers, and a 30" drop by 140 lb. cathead sampling hammer.
② See report text in Section I and plates in Appendices A and C for definitions, lab test results, and additional soil descriptions.
③ Free groundwater level measured in boring at depth of 10½ feet after drilling. Static equilibrium groundwater depth is unknown.
④ Rounded from in-progress design plans (West Yost Associates, 2009).
⑤ Projected planned 8" ID pipeline.

DCM GEOENGINEERS

WEST YOST ASSOCIATES
City of Sausalito
Priority 1 Sewer Replacement
Sausalito, California

BORING LOG B-6

PLATE NO.
B-6

FILE NO. 18337-001-00 | AUGUST 2009

APPENDIX C

DCM | GeoEngineers

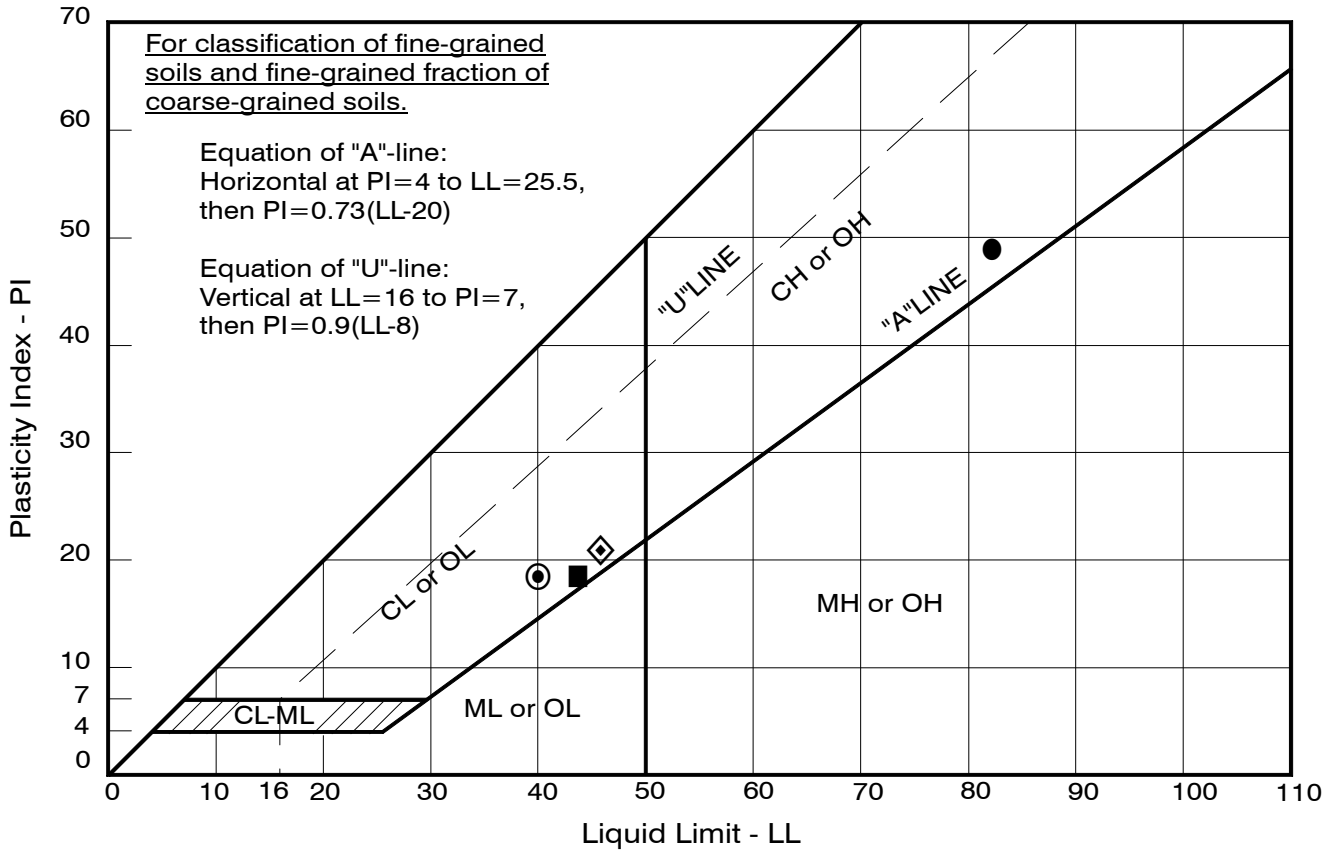

TEST SYMBOL	BORING SAMPLE NO.	DEPTH (ft)	LIQUID LIMIT - LL (not dried)	PLASTICITY INDEX - PI	RATIO*	GROUP SYMBOL**
⦿	B-2-2	2-4	40	18	NA	CL
●	B-3A-4	13¾-14½	82	49	0.67	OH
◈	B-3B-1	2½-3½	47	21	NA	CL
■	B-5-1	3½-4	43	18	NA	CL

* LL oven dried to LL not dried. Where ratio is <0.75 then sample is organic.
** Classification of fines < 0.425mm

DCM GEOENGINEERS

FILE NO. 18337-001-00 | AUGUST 2009

WEST YOST ASSOCIATES

City of Sausalito
Priority 1 Sewer Replacement
Sausalito, California

PLASTICITY INDEX

PLATE NO.

C-1

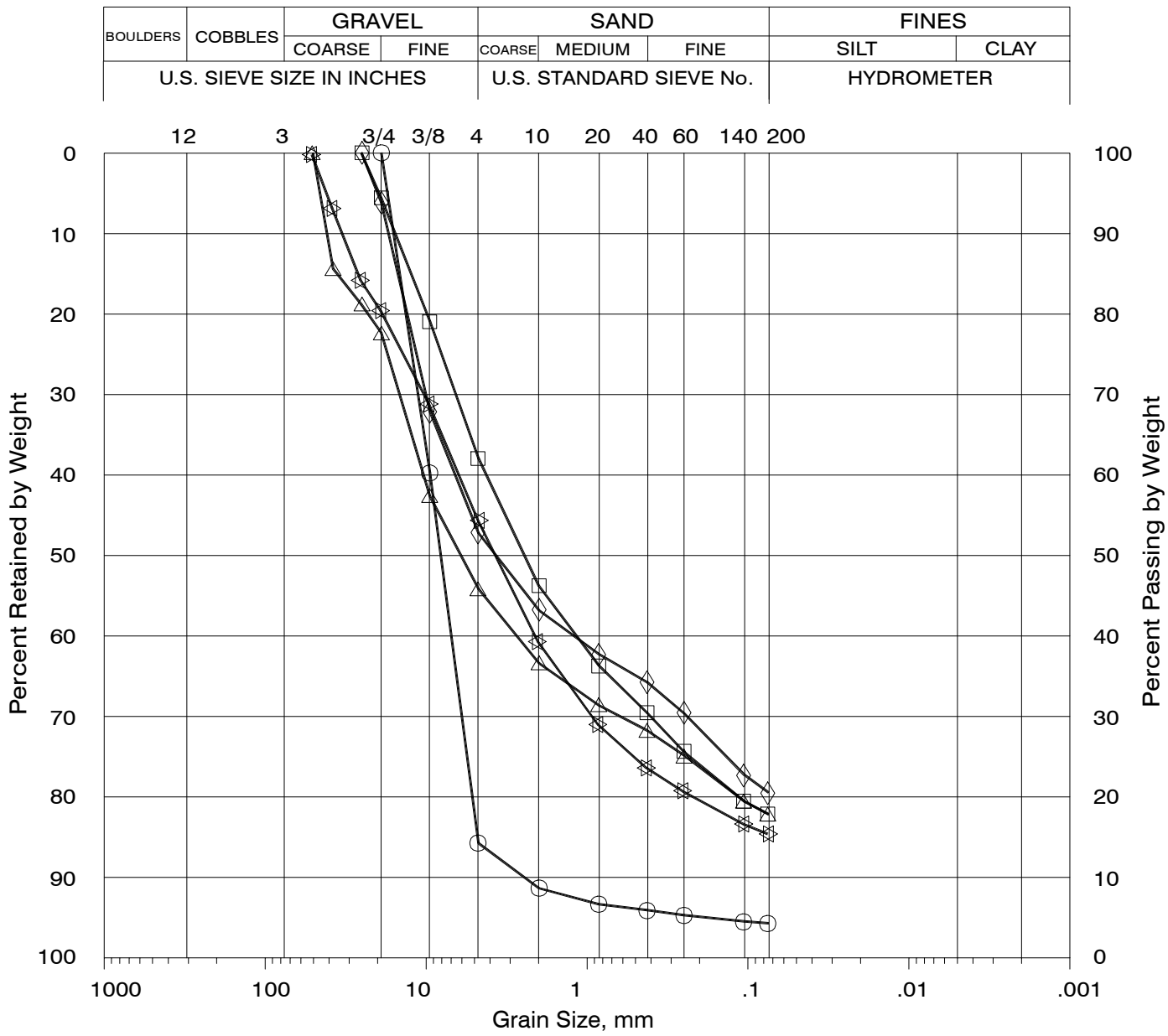

TEST SYMBOL	BORING SAMPLE NO.	DEPTH (feet)	GROUP SYMBOL	DESCRIPTION (based on grain size)
✡	B-1-2	6½-7	GC	clayey gravel with sand
○	B-2-3	7½-8½	GP	poorly graded gravel
□	B-4-3	4½-6	SC	clayey sand with gravel
△	B-4-4	9-9½	GC	clayey gravel with sand
◊	B-4-5	9½-11	GC	clayey gravel with sand

NOTE: The largest particle (grain) size that could have been sampled is a function of the inside diameter of the sample barrel used (see Plate A-1). Therefore, there may be larger particles (e.g., cobbles) in the soils sampled than reflected on the boring logs and grain size distribution curves provided in this report.

DCM GEOENGINEERS

FILE NO. 18337-001-00 | AUGUST 2009

WEST YOST ASSOCIATES

City of Sausalito
Priority 1 Sewer Replacement
Sausalito, California

GRAIN SIZE ANALYSIS

PLATE NO.

C-2

(1 of 2)

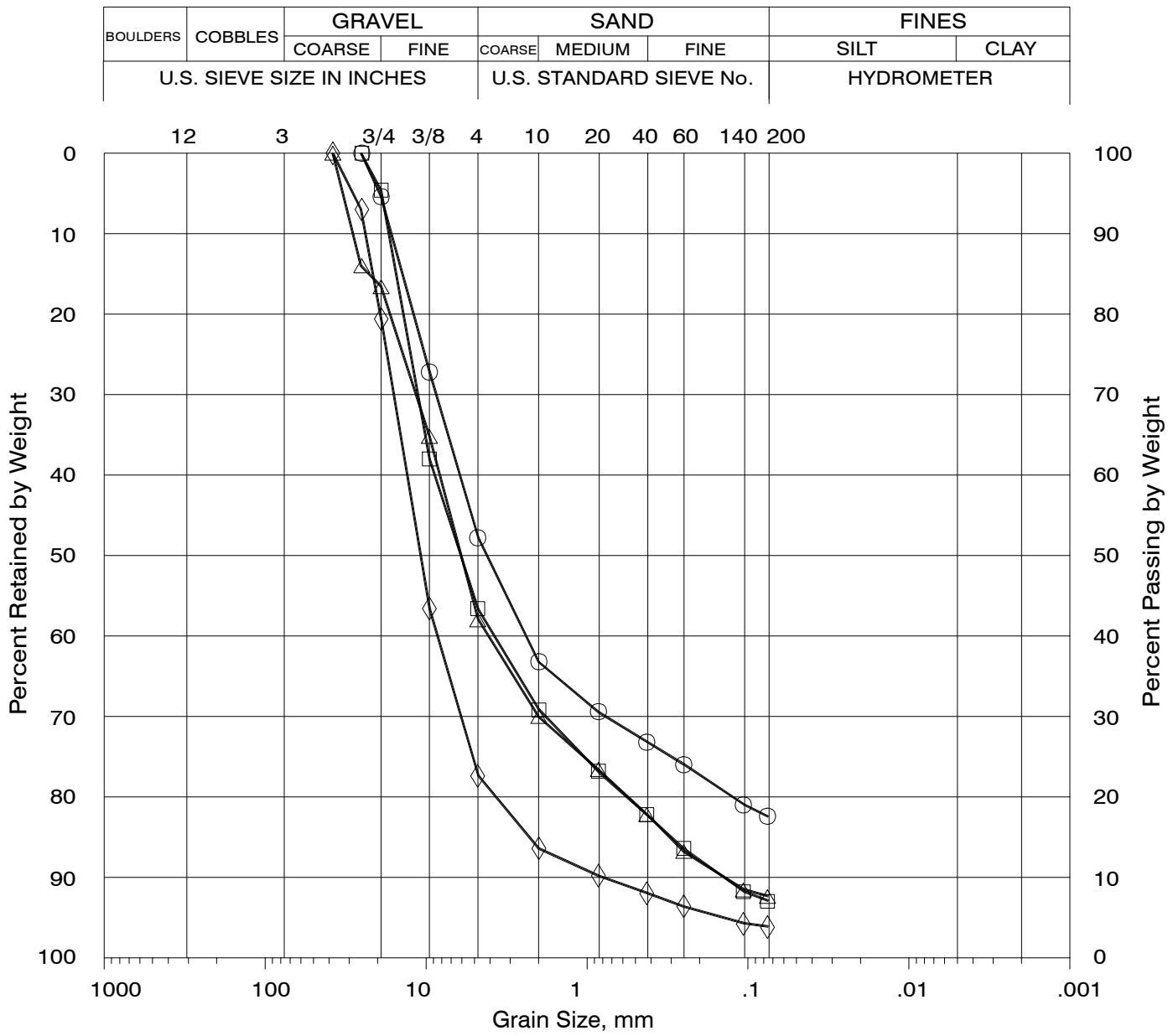

TEST SYMBOL	BORING SAMPLE NO.	DEPTH (feet)	GROUP SYMBOL	DESCRIPTION (based on grain size)
○	B-5-2	5¼-5½	GC	clayey gravel with sand
□	B-6-2	4½-6	GW-GM	well-graded gravel with silt and sand
△	B-6-4	9½-11	GW-GM	well-graded gravel with silt and sand
◊	B-6-5	13½-14½	GW	well-graded gravel with sand

NOTE: The largest particle (grain) size that could have been sampled is a function of the inside diameter of the sample barrel used (see Plate A-1). Therefore, there may be larger particles (e.g., cobbles) in the soils sampled than reflected on the boring logs and grain size distribution curves provided in this report.

DCM GEOENGINEERS

FILE NO. 18337-001-00 | AUGUST 2009

WEST YOST ASSOCIATES

City of Sausalito
Priority 1 Sewer Replacement
Sausalito, California

GRAIN SIZE ANALYSIS

PLATE NO.

C-2

(2 of 2)

UNCONFINED COMPRESSION TEST

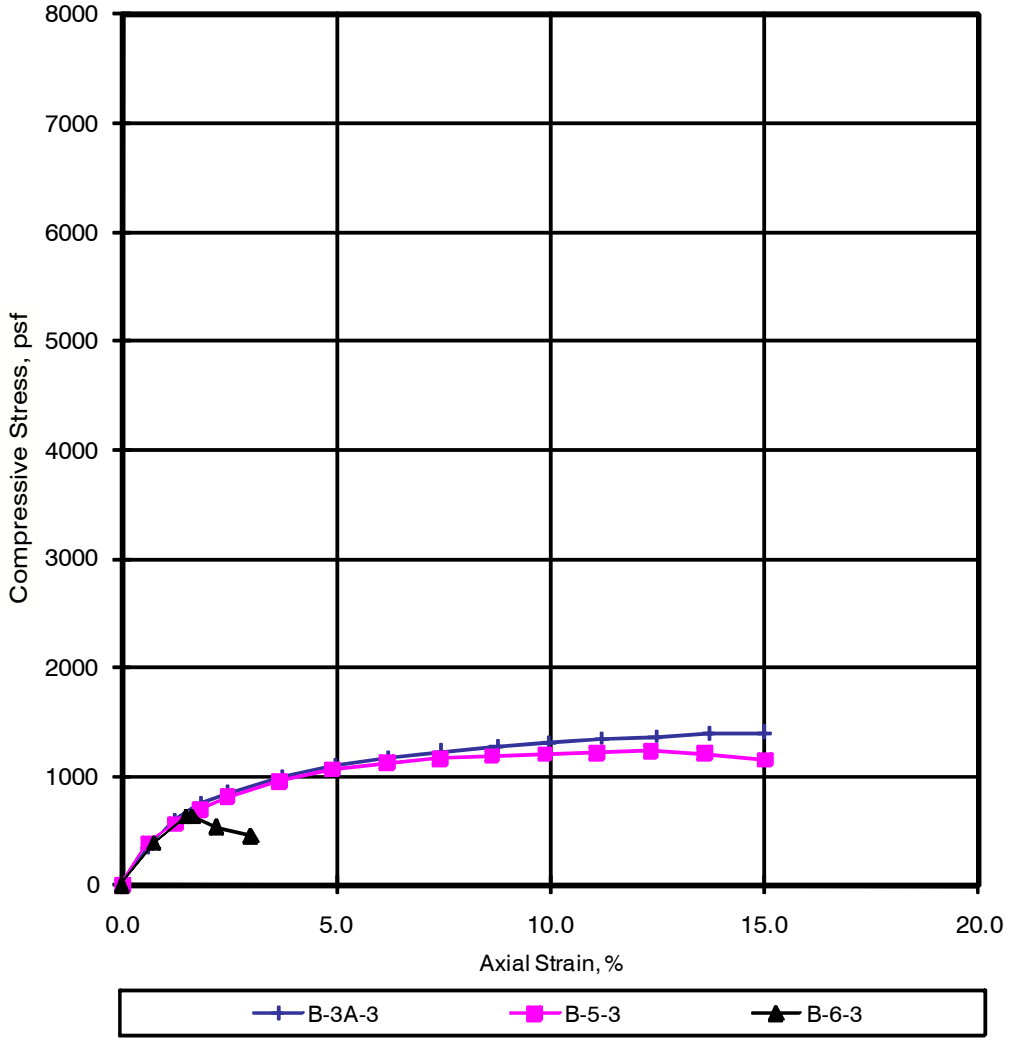

BORING SAMPLE NO.	B-3A-3	B-5-3	B-6-3
MAXIMUM UNCONFINED STRESS, psf	1,402	1,235	634
% STRAIN @ PEAK STRESS	15.0	12.3	1.7
DEPTH, ft.	13-13½	8½-9	8½-9
WATER CONTENT, %	21	21	8
DRY DENSITY, pcf	109	105	113
SATURATION, %	107	95	45

Maximum Unconfined Stress cut-off = 15% strain
Average Strain Rate = 0.07 in/min.

DCM GEOENGINEERS

FILE NO. 18337-001-00 | AUGUST 2009

WEST YOST ASSOCIATES

City of Sausalito
Priority 1 Sewer Replacement
Sausalito, California

UNCONFINED COMPRESSION

PLATE NO.

C-3

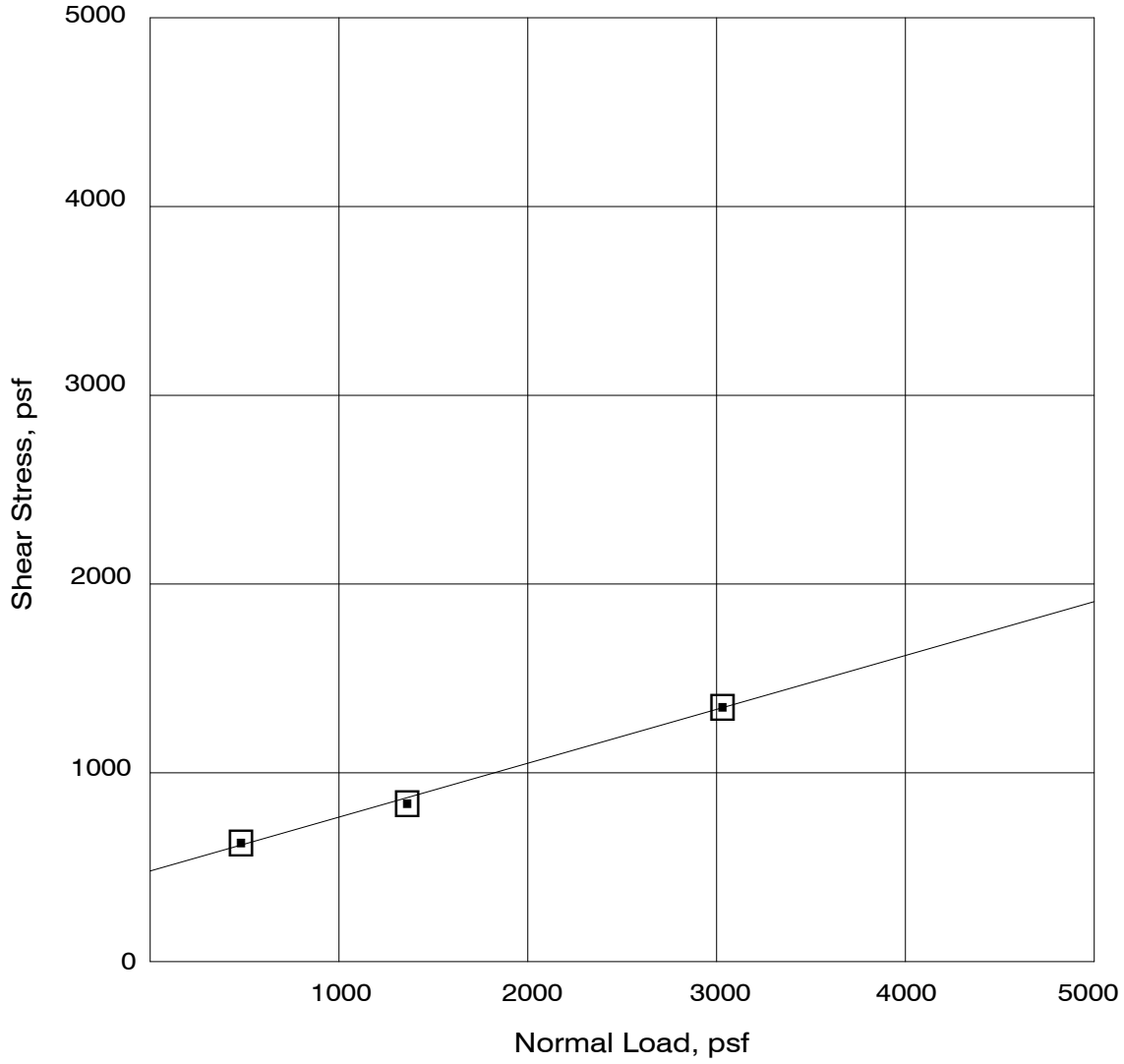

TEST SYMBOL	GRAPH LINE	BORING SAMPLE NO.	DEPTH (ft)	COHESION (p.s.f.)	INTERNAL FRICTION ANGLE (degrees)	AVE. DRY DENSITY (pcf)/ MOISTURE CONTENT (%)	
						BEFORE TEST	AFTER TEST
▣	———	B-3A-1	7½-8	480	16	105/21	105/23

DCM | GEOENGINEERS

FILE NO. 18337-001-00 | AUGUST 2009

WEST YOST ASSOCIATES

City of Sausalito
Priority 1 Sewer Replacement
Sausalito, California

DIRECT SHEAR

PLATE NO.

C-4

CORROSION TESTS and RESULTS

SAMPLE NO.	RESISTIVITY saturated (ohm-cm)	REDOX (mv)	pH	SULFATE (mg/kg)	CHLORIDE (mg/kg)
B-3A (8-10.5')	140	450	7.6	520	2,100*
B-5 (7-9.5')	320	450	7.5	N.D.	670
Test Method	ASTM G57	ASTM D1498	ASTM D4972	ASTM D4327	ASTM D4327
Detection Limit	-	-	-	15	15

Test Notes:

1. The above tests (excluding redox and sulfides) were performed in accordance with the following ASTM Methods:

   a. ASTM G57: STANDARD TEST METHOD FOR FIELD MEASUREMENT OF SOIL RESISTIVITY USING THE WENNER FOUR-ELECTRODE METHOD

   b. ASTM D1498: STANDARD TEST METHOD FOR OXIDATION-REDUCTION POTENTIAL OF WATER

   c. ASTM D4972: TEST METHOD FOR pH OF SOILS

   d. ASTM D4327: STANDARD TEST METHOD FOR ANIONS IN WATER BY CHEMICALLY SUPPRESSED ION CHROMATOGRAPHY

2. Testing provided by Cerco Analytical.

3. N.D. = Not Detected

* Detection limit elevated to 75 mg/kg due to dilution.

APPENDIX D

DCM | GeoEngineers

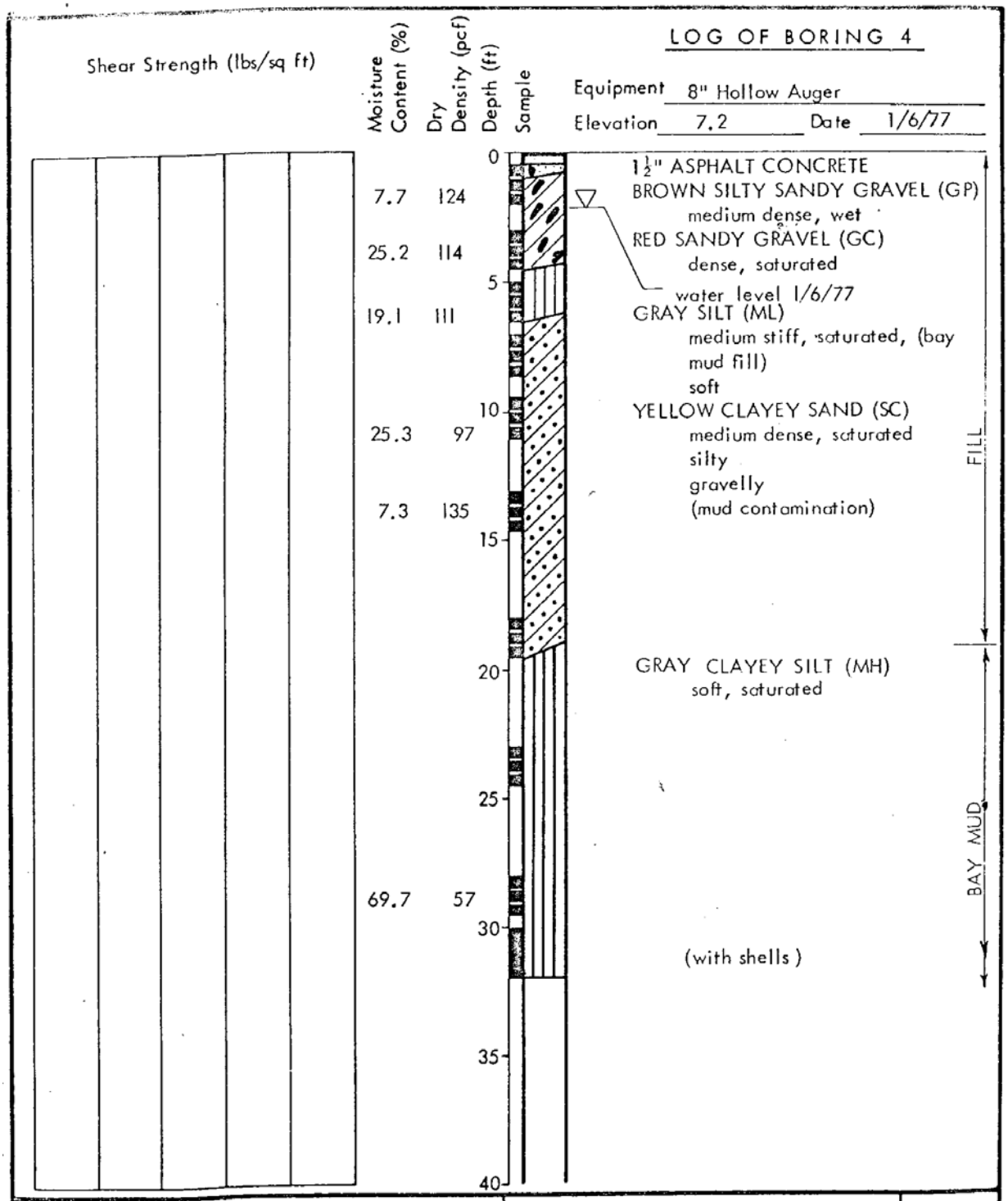

Modified from Harding Lawson and Associates (1977)

DCM | GEOENGINEERS

FILE NO. 18337-001-00 | AUGUST 2009

WEST YOST ASSOCIATES

City of Sausalito
Priority 1 Sewer Replacement
Sausalito, California

REFERENCE BORING RB-1

PLATE NO.

D-1

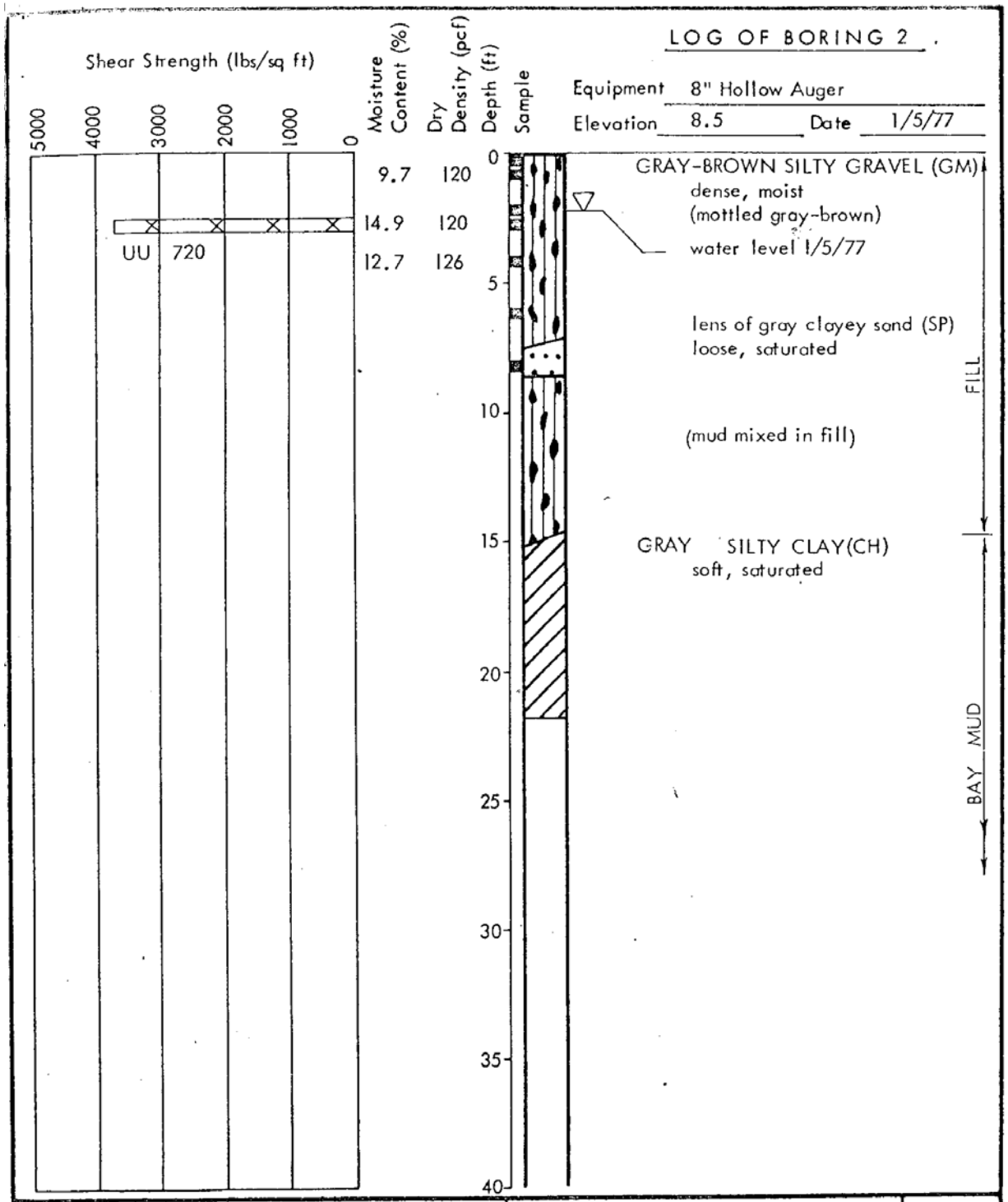

HARDING - LAWSON ASSOCIATES
Consulting Engineers and Geologists

Job No 2830,013.01 Appr Date 1/14/77

LOG OF BORING 2
COMMERCIAL BUILDING
100 GATE 5 ROAD

PLATE 3

Modified from Harding Lawson and Associates (1977)

DCM | GEOENGINEERS

FILE NO. 18337-001-00 | AUGUST 2009

WEST YOST ASSOCIATES
City of Sausalito
Priority 1 Sewer Replacement
Sausalito, California

REFERENCE BORING RB-2

PLATE NO.
D-2

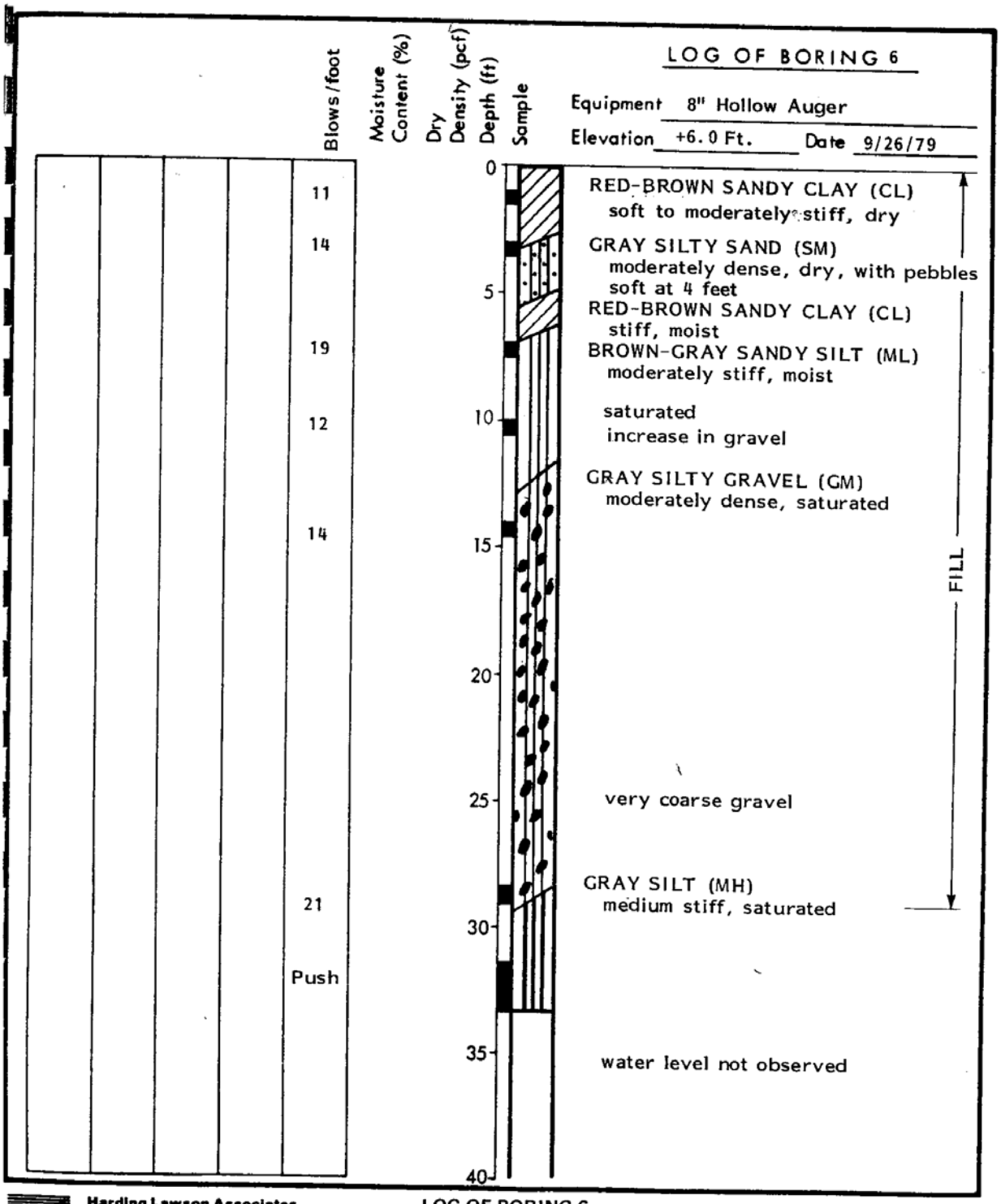

Harding Lawson Associates
Engineers Geologists & Geophysicists

LOG OF BORING 6
Federal Ornamental Building
Sausalito, California

PLATE 8

DRAWN P. Anderson | JOB NUMBER 2830,017.01 | APPROVED KHB | DATE 12/3/81 | REVISED | DATE

Modified from Harding Lawson and Associates (1981)

DCM GEOENGINEERS

FILE NO. 18337-001-00 | AUGUST 2009

WEST YOST ASSOCIATES
City of Sausalito
Priority 1 Sewer Replacement
Sausalito, California

REFERENCE BORING RB-3

PLATE NO.
D-3

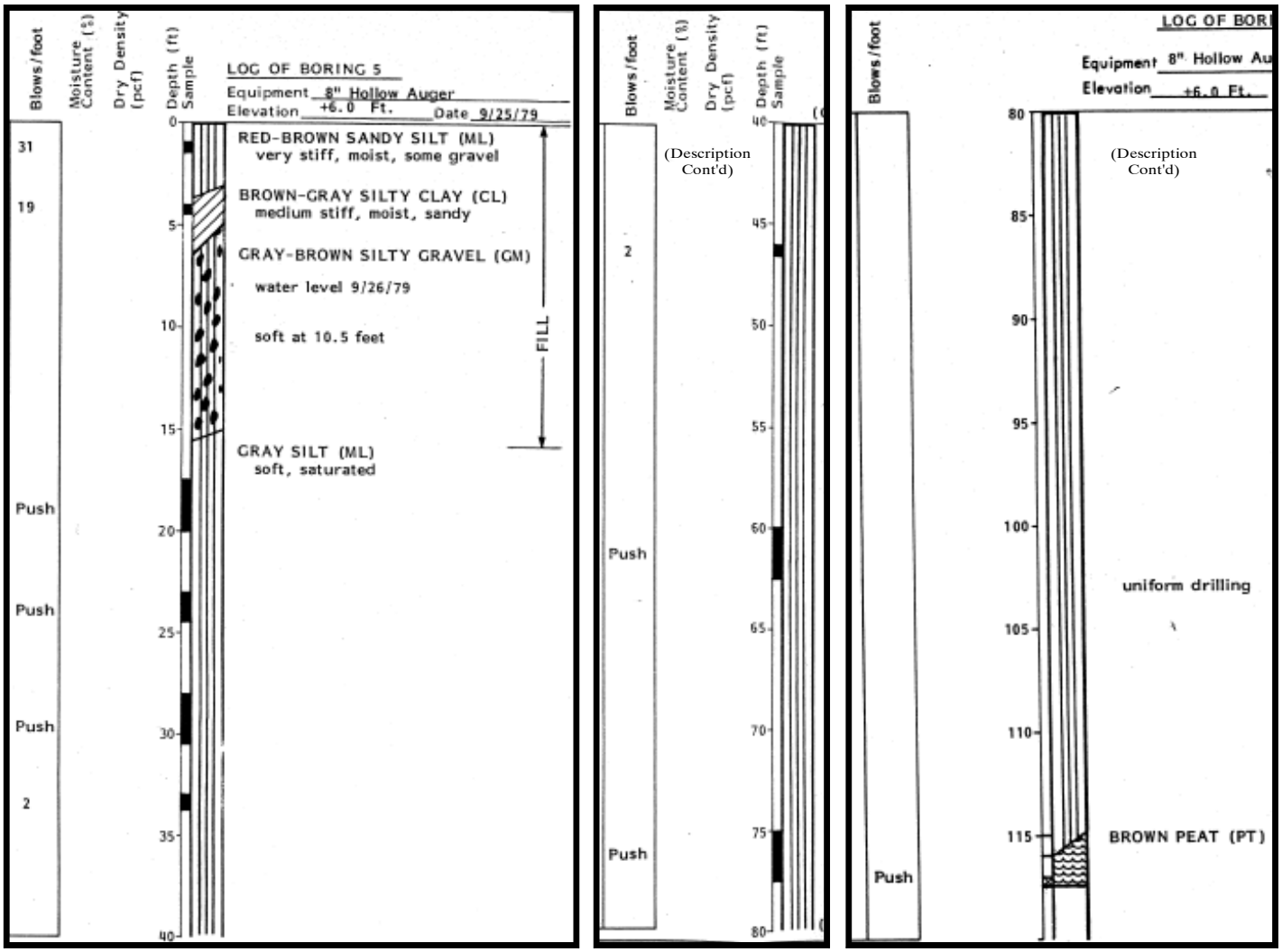

Modified from Harding Lawson and Associates (1981)

DCM | GEOENGINEERS

WEST YOST ASSOCIATES

City of Sausalito
Priority 1 Sewer Replacement
Sausalito, California

REFERENCE BORING RB-4

PLATE NO.

D-4

FILE NO. 18337-001-00 | AUGUST 2009

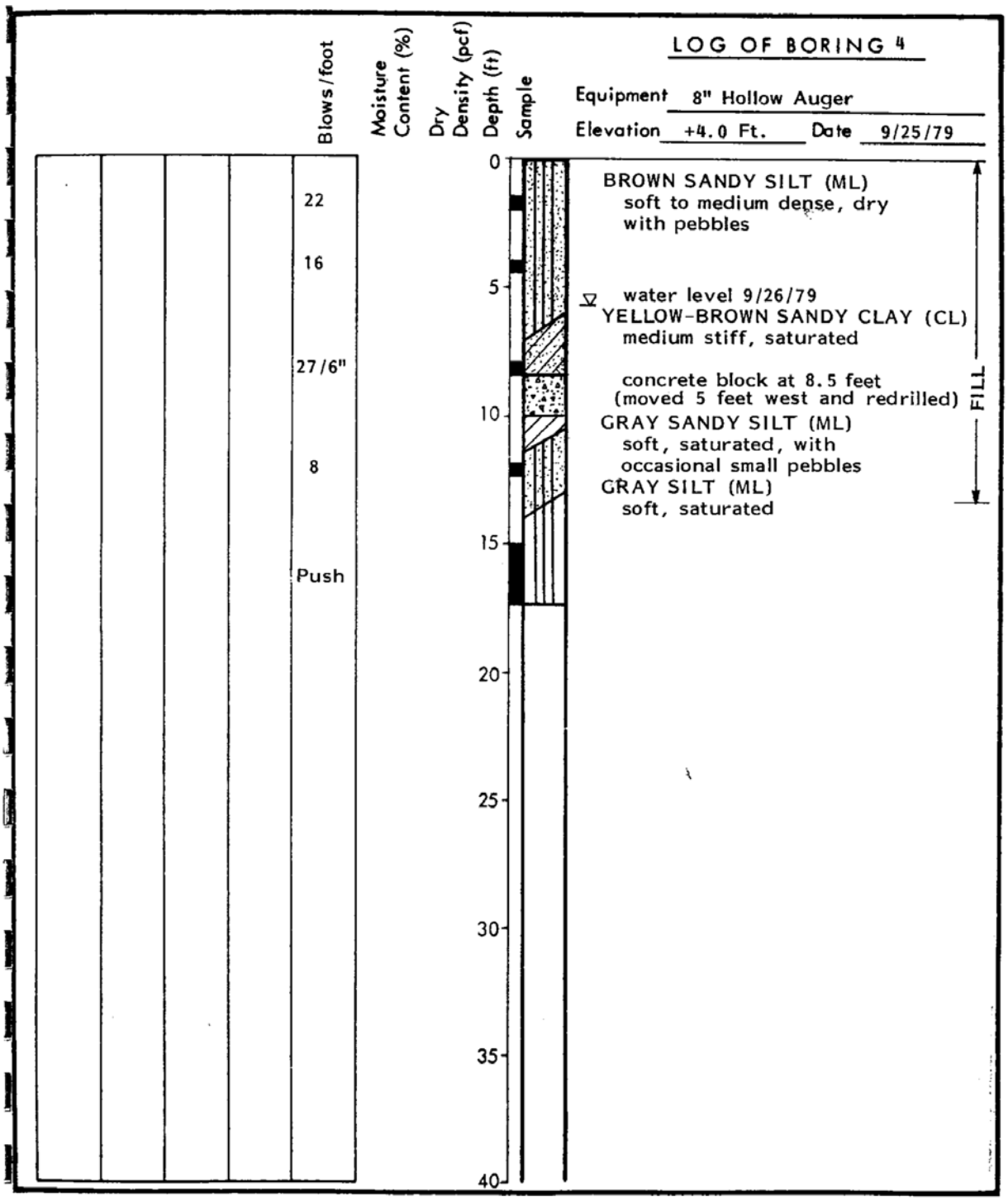

Harding Lawson Associates
Engineers Geologists
& Geophysicists

LOG OF BORING 4
Federal Ornamental Building
Sausalito, California

PLATE
5

DRAWN	JOB NUMBER	APPROVED	DATE	REVISED	DATE
P. Anderson	2830,017.01	KAB	12/3/81		

Modified from Harding Lawson and Associates (1981)

DCM | GEOENGINEERS

FILE NO. 18337-001-00 | AUGUST 2009

WEST YOST ASSOCIATES
City of Sausalito
Priority 1 Sewer Replacement
Sausalito, California

REFERENCE BORING RB-5

PLATE NO.
D-5

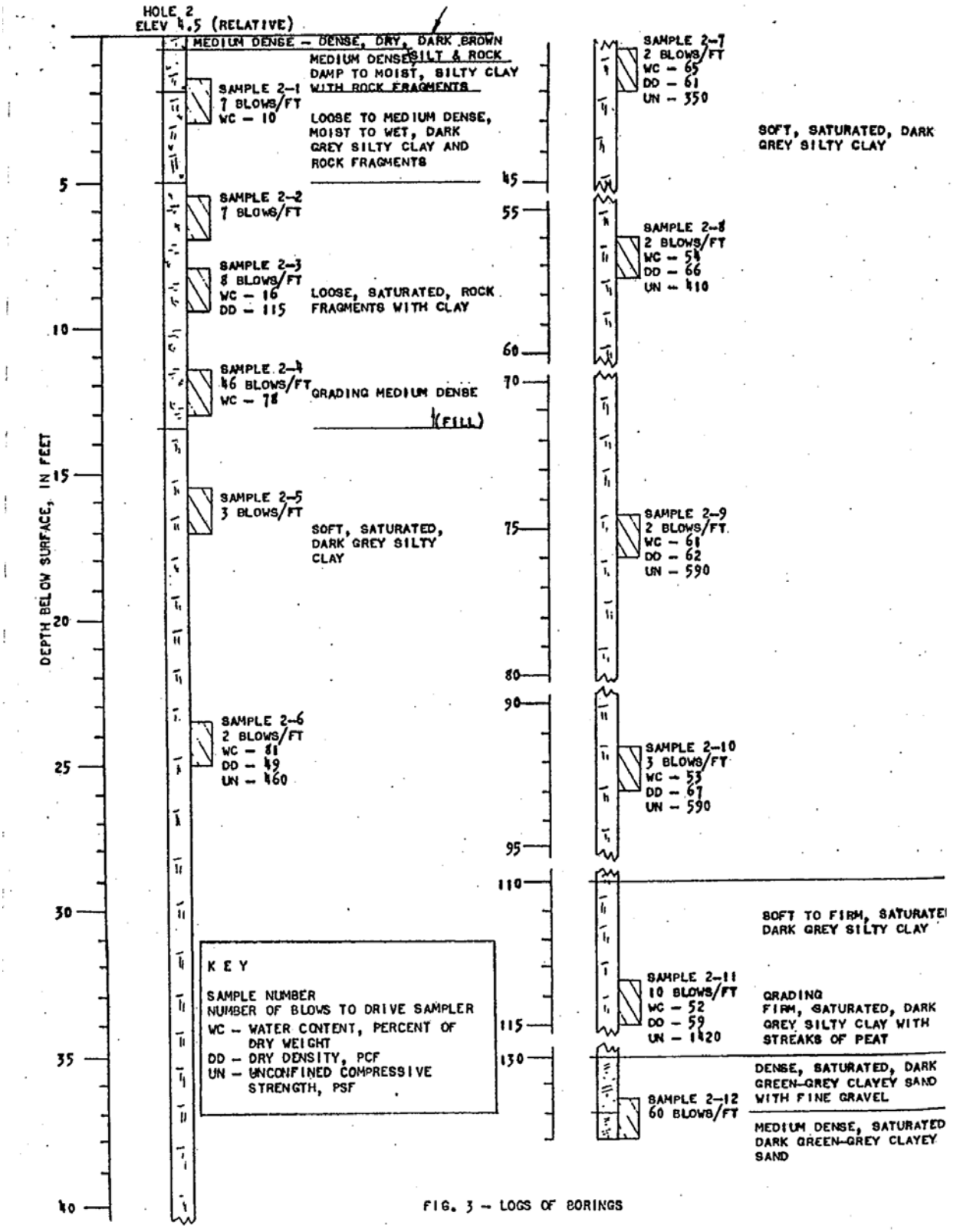

FIG. 3 – LOGS OF BORINGS

Modified from Woodward-Clyde-Sherard & Associates (1959)

DCM | GEOENGINEERS

FILE NO. 18337-001-00 | AUGUST 2009

WEST YOST ASSOCIATES
City of Sausalito
Priority 1 Sewer Replacement
Sausalito, California

REFERENCE BORING RB-6

PLATE NO.
D-6

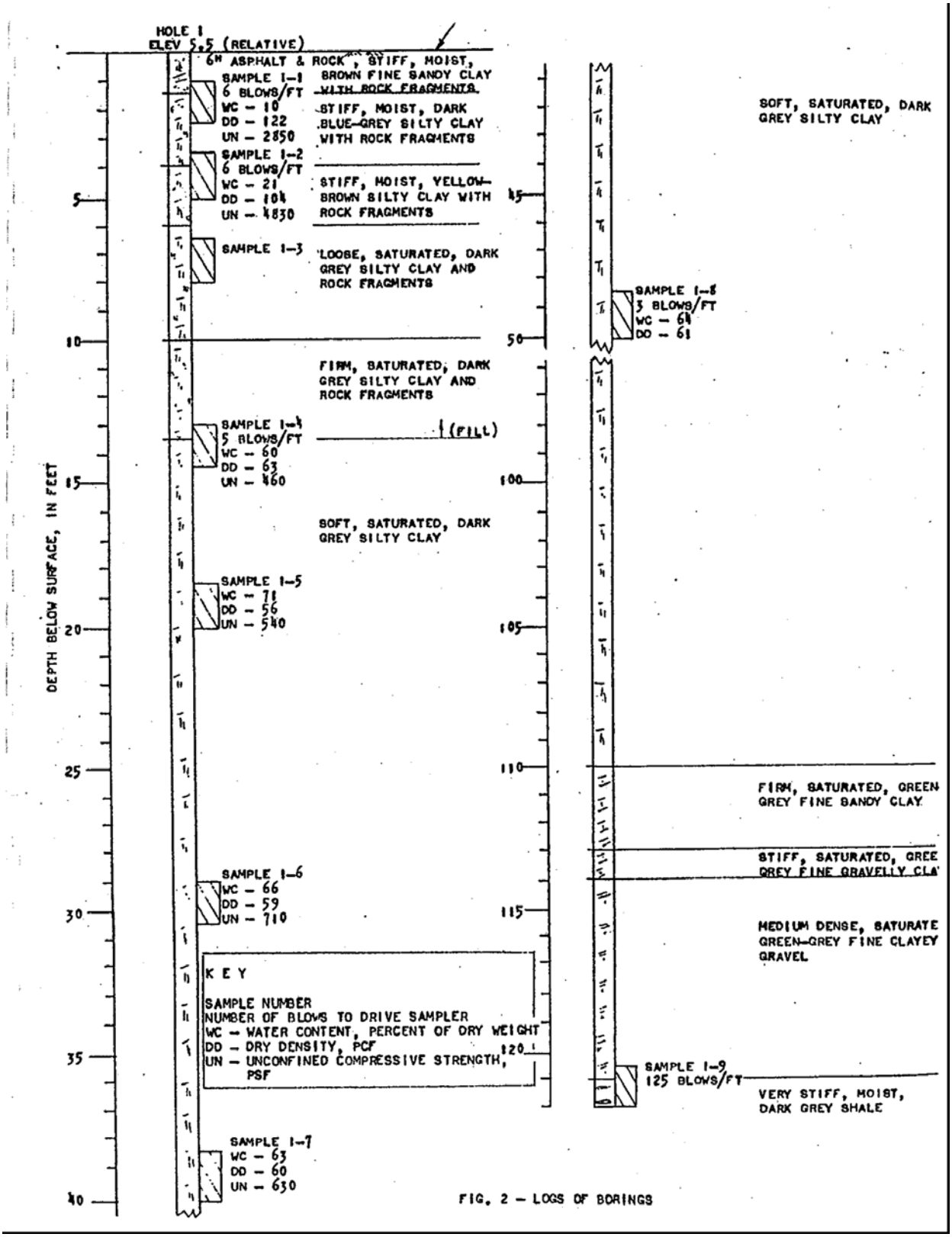

FIG. 2 – LOGS OF BORINGS

Modified from Woodward-Clyde Consultants (1959)

DCM | GEOENGINEERS

FILE NO. 18337-001-00 | AUGUST 2009

WEST YOST ASSOCIATES

City of Sausalito
Priority 1 Sewer Replacement
Sausalito, California

REFERENCE BORING RB-7

PLATE NO.

D-7

Project: CLIPPER YACHT HARBOR
Sausalito, California

Log of Boring No. 3

Date Drilled: January 12, 1984
Type of Boring: 5" Auger
Hammer Weight: 140 lbs.

Remarks:

(See Legend Sheet for sampler types and hammer weights)

Depth, Ft.	Samples	Blows/Ft.	MATERIAL DESCRIPTION	Laboratory Tests: Moisture Content, %	Dry Density, pcf	Unconfined Compressive Strength, psf
			Surface Elevation:			
			ASPHALT			
			CLAYEY SANDY GRAVEL (GC): Medium dense to dense, moist, gray (ATD)			
			Varying sand and gravel content, saturated, gravel to 2" in diameter			
5	1	5	SILTY CLAY (CL) Soft, brown and blue-gray mottled	16	117	608
			Becomes gravelly			
			SANDY GRAVELLY CLAY (CL) Soft to medium stiff, tan			
	2	16	SILTY CLAY (CL): Medium stiff, green-gray	10	131	2382
10			GRAVELLY CLAY (CL) Stiff, red-brown to light brown			
			Gravel to 1" in diameter			
			SILTY CLAY (CL/CH) Soft to medium stiff, gray, (Bay Mud)			
15	3	8	CLAYEY GRAVEL (GC) Loose to medium dense, gray, gravel to 1" in diameter			
			Varying clay content			
20						
25			SILTY CLAY (CL/CH) Soft, gray, (Bay Mud)			
30			BOTTOM OF BORING @ 26'			

Proj. No. 16155A | Woodward-Clyde | Figure 4

Modified from Woodward-Clyde Consultants (1984)

DCM GEOENGINEERS

FILE NO. 18337-001-00 | AUGUST 2009

WEST YOST ASSOCIATES
City of Sausalito
Priority 1 Sewer Replacement
Sausalito, California

REFERENCE BORING RB-8

PLATE NO.
D-8

GEOENGINEERING, INC.

BORING No. A
Date Drilled 2/3/95
Station
Approx Elev. +7.2 mllw

5-52-wm

OTHER TEST DATA	PERCENT SILT CLAY	DRY DENSITY (PCF)	MOISTURE CONTENT (%)	BLOW COUNTS (PER FOOT)	SAMPLE INTERVAL	CLASSIFICATION	(DEPTH FEET)	
							0	2½" OF AC
						SP		BRN & GRY FN-CL SAND & GRAVEL
		(2:30) (9:30)		4		SM		RED-BRN FN-MED SAND, LOOSE
MEASURED GROUNDWATER				1				
.19	93%	67 73	55 47	SHELBY TUBE PUSH			10	GRN GRY CLAY W/S SHELLS & SLIGHT ODOR, SOFT
TXUU P1=1.0 P3=1.64	80%	76	44	3			20	SMALL QUANTITIES OF CREOSOTED WOOD (APPARENT OLD PILE)
.24/.20 DSUU N=1.8 S=0.34 .25/.24		89 63 67	33 64 55	2 1			30	NUMEROUS SHELLS (THIN LENSES OF VY FN SA SILT)
.22/.27		77	70	0		CH	40	
DSSU N=2.7 S=0.41 .22/.27		58 64	72 59	1			50	
.29/.27		67	64	0			60	CONTINUED ON FIGURE A2

FILL

BAY MUD

Hand Penetrometer/TORVANE READINGS

NOTES:

1. To be interpreted according to Figure A and description in Appendix A & Text.

ABBREVIATION KEY:

SI—Silty	*VY—Very*	*GRY—Gray*
SA—Sandy	*MED—Medium*	*GRN—Green*
CL—Clayey	*STF—Stiff*	*BRN—Brown*
FN—Fine	*DNS—Dense*	*DK—Dark*
W—With	*LOS—Loose*	*LT—Light*

LOG OF TEST BORING No. *FIG A1*

Modified from Geoengineering (1995)

DCM | GEOENGINEERS

FILE NO. 18337-001-00 | AUGUST 2009

WEST YOST ASSOCIATES
City of Sausalito
Priority 1 Sewer Replacement
Sausalito, California

REFERENCE BORING RB-9

PLATE NO.
D-9
(1 of 2)

GEOENGINEERING, INC.

BORING No. A (SHEET 2 OF 2)

5-52-wm

OTHER TEST DATA	PERCENT SILT CLAY	DRY DENSITY (PCF)	MOISTURE CONTENT(%)	BLOW COUNTS (PER FOOT)	SAMPLE INTERVAL	CLASSIFICATION	(DEPTH FEET)
							60
.22/.22		63	62	0			70
						CH	80
.35/.25		57	76	0			90
							100
.95/.33		66	64	9			110
							120
1.1/.45		55	76	11			130

GRN GRY CLAY, SOFT

BAY MUD

GRY-BRN SI CLAY (MED STIFF)

BOTTOM OF BORING

Hand Penetrometer/Readings/TORVANE READINGS

(SEE NOTES ON FIGURE A1)

FIG A2

Modified from Geoengineering (1995)

DCM GEOENGINEERS

FILE NO. 18337-001-00 | AUGUST 2009

WEST YOST ASSOCIATES

City of Sausalito
Priority 1 Sewer Replacement
Sausalito, California

REFERENCE BORING RB-9

PLATE NO.

D-9

(2 of 2)

SECTION II

GEOTECHNICAL DESIGN SUMMARY

DCM | GeoEngineers

GEOTECHNICAL ENGINEERING INVESTIGATION REPORT
CITY OF SAUSALITO
PRIORITY 1 SEWER REPLACEMENT PROJECT
SAUSALITO, CALIFORNIA

SECTION II - GEOTECHNICAL DESIGN SUMMARY

1.0 INTRODUCTION

This geotechnical engineering investigation report is for the City of Sausalito's Priority 1 Sewer Replacement Project. The project is located in the Gate 5 Road and Spinnaker Areas of Sausalito, California. The locations of these project areas are illustrated on Plate I-1 Section I. The project consists of replacing existing small-diameter (6- to 8-inch) gravity-flow sanitary sewer pipelines with a new 8-inch diameter gravity-flow pipeline and a new 4-inch diameter force main pipeline. A description of segments in each project area is summarized in Tables II-1 and II-2.

Table II-1 - Sanitary Sewer Replacement - Gate 5 Road Area (see Plate I-2)

Segment Location	Length (ft)	Invert Depth (ft)	Existing Gravity Pipeline		New Replacement Pipeline Size and Construction[1]
			Material	Condition	
Gate 5 Road & southeast extension	1,638	6 to 14	8″ VCP lined with HDPE	contains sags	8″ by open-cut trenching same alignment and depth as existing
Coloma Street	316	9 to 13	VCP lined with HDPE[2]		
Harbor Drive	417	6 to 9	8″ VCP and/or ACP		

[1]The material type of the new pipeline is not known to us at this time.
[2]The diameter of the existing VCP is not known to us at this time.

Table II-2 - Sanitary Sewer Replacement - Spinnaker Area (see Plate I-3)

Segment Location	Length (ft)	Invert Depth (ft)	Existing Gravity Pipeline		New Replacement Pipeline Size and Construction[1]
			Material	Condition	
Humboldt Avenue	282	9 to 12	6″ Cast Iron	contains sags and is severely corroded	8″ by open-cut trenching same alignment and depth as existing
Bay Road and parking lot	593	5 to 9			slip 4″ force main into existing 6″[2]
Bay Road parking lot to Spinnaker Restaurant	208	4 to 5			8″ by open-cut trenching same alignment and depth as existing[3]

[1]The material type of the new pipeline is not known to us at this time.
[2]Includes a new sanitary sewer pump station at the east end of the force main. We have no plan or profile information pertaining to the pump station at this time.
[3]Includes a new, 6- to 8-foot deep grease interceptor at the east end of the segment for the Spinnaker Restaurant.

The new gravity sanitary sewer replacement pipelines will be routed through existing sanitary sewer manholes. Groundwater is infiltrating into the existing sanitary sewer pipeline through some of these manholes. Leaky manholes will be rehabilitated as part of this project (e.g., possibly by manhole lining, chemical grouting, etc. to prevent groundwater infiltration). As illustrated on Plates I-2 and I-3 Section I, the existing gravity sanitary sewer pipelines to be replaced by this project, slope to City pump stations.

This report contains a description of geotechnical conditions along the alignment of planned new sanitary sewer replacement pipelines in the project areas (Section I) and geotechnical conclusions and recommendations for design, construction, and useful long-term performance of the new replacement pipelines and related project structures as described herein (Section II). All descriptions provided in this report pertaining to existing and new sanitary sewer replacement pipelines and related project structures (e.g., location, depth, size, length, material type, condition, and construction methods, etc.) are based on in-progress design plans by West Yost Associates dated August 21, 2009 (West Yost Associates, 2009).

2.0 GEOTECHNICAL DATA SUMMARY

Section II.2 is an interpreted summary of the geotechnical data provided in Section I.

2.1 Roadway Pavements, Fills and Bay Mud

Materials encountered in test borings in the project areas (boring logs are provided in Appendices B and D) consisted of roadway pavements, fills and native soils. Summary descriptions of these materials are provided in the following sections.

2.1.1 Roadway Pavements

Roadway pavements encountered in project test borings are described on the respective logs in Appendix B. A summary of pavement section types and thicknesses encountered in project test borings is provided in Table I-3, Section I. Pavement sections consisting of asphalt concrete over aggregate base rock were encountered in project test borings. Pavement sections

encountered in test borings may not be the same type and thickness of pavement sections located in other portions of roadways in the project areas. Composite pavements (i.e., original pavement plus subsequent pavement overlays) are generally thickest in the center of roadways and generally thin laterally to the edges of roadways. Roadways in the Gate 5 and Spinnaker Areas have existed since the 1940s or earlier and may have been repaved multiple times with differing materials. For example, the area of Gate 5 Road south of Harbor Drive was used as a staging and parking area during the 1940s Marinship Shipyard activities (see Section I.2.4) and may have been paved with concrete.

2.1.2 Utility Trench Backfill

Boring B-3B was intentionally drilled into trench backfill above the existing project sanitary sewer pipeline. Boring B-3B encountered lean clay with sand trench backfill. The new sanitary sewer replacement pipeline alignment parallels and crosses other backfilled trench excavations made for the installation of existing utilities. The geometry of these utility excavations (i.e., vertical or side-sloped), and the type of bedding and backfill materials used (i.e., granular vs. cohesive), are not known to us at this time. However, backfill specified by agencies with utilities in the project area (e.g., PG&E, City of Sausalito, Marin County, etc.) is often granular (i.e., sand and gravel), pervious, non-cohesive and with little to no clay content.

2.1.3 Areal Fills

Areal fills were encountered in each of the seven (7) project test borings, except Boring B-3B, to the depths of the invert of the planned new sanitary sewer replacement pipelines in both the Gate 5 Road and Spinnaker Areas of the project. Boring B-3B was intentionally drilled in trench backfill above the existing sanitary sewer pipeline to be replaced. Areal fills encountered in project test borings are described on the respective logs in Appendix B. Areal fills encountered in project test borings included organic clay (OH), lean clay with sand (CL), lean clay (CL), fat clay (CH), gravelly lean clay with sand (CL), clayey sand with gravel (SC), silty sand (SM), silty sand with gravel (SM), poorly graded sand (SP), clayey gravel with sand (GC), well-graded gravel with silt and sand (GW-GM), well-graded gravel with sand (GW), and poorly graded

gravel (GP). Similar areal fills were encountered in each of the nine (9) reference test borings. Areal fills encountered in reference test borings are described on the respective logs in Appendix D. A summary of the thicknesses of areal fills encountered in test borings is provided in Table I-3, Section I.

Most of the areal fills in the project areas date back to the early 1900s and were placed to fill in portions of Richardson Bay for the 1940s development of the Marinship Shipyard (see Section I.2.4). Much of the fill material is crushed rock derived from quarries and excavations in the hills along the west side of Sausalito. As illustrated on Plate I-4, these hills are formed by a variety of resistant bedrock types of the Franciscan Bedrock.

Areal fills placed before the 1960s were typically not engineered and consisted solely of end-dump placement (i.e., not compacted). Fills of this type may contain debris and rubbish (see Section I.2.3). Selected parameters and typical engineering properties of areal fills encountered in project test borings (does not include data from reference test borings) and tested in the laboratory are as follows:

- Thickness = 11½ to >20 feet
- Moisture Content = 10 to 21% (12 tests)
- Dry Unit Weight = 105 to 129 pcf (8 tests)
- Average In-Situ Total Unit Weight = 131 pcf (8 tests)
- Standard Penetration Blow Count (N) = 2 to 12 (average = 6 for 18 tests)
- Liquid Limit = 40 to 82* (clayey samples, 3 tests)
- Plasticity Index = 18 to 49* (clayey samples, 3 tests)
- Unconfined Compressive Strength = 0.63 to 1.4 ksf (3 tests)
- Direct Shear Cohesion = 480 psf (clayey sample, 1 test)
- Direct Shear Phi Angle = 16 degrees (clayey sample, 1 test)

- % Passing No. 200 Sieve = 4 to 18 (9 project tests)
- % Passing Retained on No. 4 Sieve = 0 to 77 (9 project tests)

*Sand and gravel areal fill encountered in project test borings were nonplastic.

As noted by references to borehole sloughing in the logs of project test borings (see Borings B-1, B-2, B-4 and B-5 in Appendix B, Section I), much of the granular, non-cohesive areal fill in the project areas demonstrates flowing or fast-raveling behavior where below groundwater and vertically cut in an unshored condition, even within a 5-inch diameter borehole. The tendency for areal fill to flow will be even greater when and where exposed in vertical excavations for the project.

2.1.4 Bay Mud

Bay Mud was encountered in project test Borings B-5 and B-6 below the depth of the invert for the planned sanitary sewer replacement in the Spinnaker Area of the project. Project test borings in the Gate 5 Road Area of the project were drilled to depths of 18½ to 20 feet below ground surface and did not penetrate through the entire thickness of areal fill and into the underlying Bay Mud. Bay Mud encountered in project test borings (see Borings B-5 and B-6) is described on the respective logs in Appendix B and included organic clay (OH) and fat clay (CH). Bay Mud is widely known for being very corrosive to steel and concrete.

Bay Mud was encountered in each of the nine (9) reference test borings that were drilled in the project areas (including Reference Borings RB-1 through RB-8 in the Gate 5 Road Area and Reference Boring RB-9 in the Spinnaker Road Area). Bay Mud encountered in the reference test borings is described on the respective logs in Appendix D. Reference Borings RB-6, RB-7, and RB-9 were the only borings to penetrate through the entire Bay Mud thickness and into underlying alluvial soils and/or bedrock. The thickness of Bay Mud as logged in Reference Borings RB-4, RB-6, RB-7 and RB-9 is approximately 100 feet.

Selected parameters and typical engineering properties of Bay Mud encountered in project test borings and reference borings and tested in the laboratory are as follows:

- Thickness = approximately 100 feet
- Moisture Content = 33 to 81% (26 tests)
- Dry Unit Weight = 49 to 89 pcf (26 tests)
- Average In-Situ Total Unit Weight = 103 pcf (26 tests)
- Standard Penetration Blow Count (N) = 2 (1 test)
- Unconfined Compressive Strength = 0.35 to 0.71 ksf (reference tests)

Reference borings indicate that Bay Mud contains horizons of peat.

Loads on compressible Bay Mud cause the Bay Mud to consolidate (settle). In a steady state, the rate of Bay Mud settlement will slowly decrease over time. For a Bay Mud thickness of 100 feet, it will take hundreds of years to reach "ultimate" consolidation (see Plate II-1).

Studies of Bay Mud in or near the project areas by others have concluded the following:

- Settlement from consolidation of the Bay Mud due to new fills or from lateral movement of the bulkhead or barge in the Spinnaker Area is still possible (Geoengineering, 1995).
- The 15-year settlement estimate of Bay Mud consolidation in the Gate 5 Road Area near Harbor Drive, assuming no additional loading, would be approximately ½ foot between 1999 and 2014 (BAGG, 1999).
- The 15-year settlement estimate of Bay Mud consolidation in the Gate 5 Road Area near Harbor Drive, assuming three to four feet of new areal fill, would be approximately 1 foot between 1999 and 2014 (BAGG, 1999).
- Terrain elevation difference analysis of the Sausalito area by Towill (2009) shows that portions of the project areas in 2007 were generally 3 to 4 feet lower in elevation than in 1968. Towill (2009) reported that areas with large settlements are typically on unimproved land near the present shoreline and areas with large fills where additional fill and improvements have been added since 1968.

2.2 Groundwater

The measured depth to which groundwater accumulated in project test borings on completion of drilling is recorded on the individual boring logs in Appendix B and summarized in Section I, Table I-3. The project test borings were backfilled with grout immediately upon drill completion to minimize traffic disruption; therefore, the groundwater levels measured on completion of drilling do not represent static (i.e., equilibrium) groundwater levels. Equilibrium groundwater levels can take several hours to days to be established in an open borehole. Equilibrium groundwater levels will likely be higher (i.e., closer to the ground surface) than the groundwater levels measured on completion of drilling. In addition, groundwater levels in the project areas will fluctuate based on factors such as tides, seasonal rainfall, water levels in nearby drainages, and possibly other factors not evident at the time of writing this report. Portions of the both the Gate 5 Road and Spinnaker Areas of the project are shown within FEMA's 100-year flood hazard areas (ABAG, 2009).

2.3 Faulting

No active fault (where active fault is defined by the State of California as one with known surface displacement within the last 10,000 years, see Hart and Bryant, 1997) is known to cross the project areas. The nearest active fault to the project areas is the San Andreas Fault, located between 6 and 7 miles to the southwest. The location of the San Andreas Fault, and other seismogenic faults relative to the project areas are shown on Plate II-2.

2.4 Ground Shaking

The project areas will be subject to strong ground shaking during earthquakes on nearby faults, including those identified on Plate II-2. It is estimated that the peak firm rock ground acceleration in the project areas, based on 10% probability of exceedance in 50 years (equivalent to a seismic recurrence interval of one event every 475 years), is 0.5g (see Plate II-3). The actual ground shaking that will occur in the project areas during an earthquake will be dependent upon the earthquake magnitude, its distance, surrounding topography, and the geometric relationships

and seismic response of the underlying soil and bedrock. Earthquake shaking in the Bay Area has been amplified in areas underlain by Bay Muds during historic earthquakes (e.g., the 1989 Loma Prieta earthquake). Bolt (1993) indicates that average peak ground accelerations greater than 0.5g results in ground cracks and breakage of underground pipes (see Plate II-4).

2.5 Liquefaction

Liquefaction is a phenomenon in which soils lose internal strength as a result of increased pore pressure generated by cyclic loading. This behavior is commonly induced by ground shaking during earthquakes. Soils prone to liquefaction are saturated (below groundwater), non-cohesive silts and sands of low to medium density. Liquefaction-prone soils encountered in project test borings include the loose, poorly graded sand fill at depths of 12½ to 15½ feet below ground surface in Boring B-2, and the loose, silty sand fill at depths of 12 to 20 feet below ground surface in Boring B-4. The Association of Bay Area Governments has identified all areas of Sausalito having old fills over Bay Mud (i.e., both project areas) as very highly susceptible to liquefaction (ABAG, 2009). Historically, we are aware of only one instance of earthquake-caused liquefaction occurring in the Sausalito area (Youd and Hoose, 1978). This instance occurred during the 1906 San Francisco earthquake near the Sausalito Ferry Building (the Ferry Building was located at that time part-way between the Gate 5 Road and Spinnaker Areas). We are not aware of any reports of liquefaction occurring in the Sausalito area during the 1989 Loma Prieta earthquake (Knudsen, 2000).

3.0 CONCLUSIONS AND RECOMMENDATIONS

Based on the findings of our geotechnical investigation and our understanding of the project, it appears that the planned new sanitary sewer replacement pipeline and related project structures will be entirely within old areal fills placed over Bay Mud. Approximately 30,000 wooden piles were driven into the ground in the area to provide foundations for construction of the 1940s Marinship Shipyard (see Section I.2.4). Uneven consolidation settlement of the underlying Bay Mud (and possibly the effects of the old driven piles) has resulted in the development of sags (and possibly hogs) in the existing sanitary sewer pipeline in the project areas. As described in

Section II.2.1.4, the Bay Mud in the project areas will continue to consolidate for hundreds of years. This consolidation settlement of the Bay Mud will be uneven over the lengths of the pipelines as a result of variations in composition, consistency and thickness of the Bay Mud, variations in fill thickness and possibly underlying remnant pile foundations. These factors will lead to differential settlement of the new pipelines. Therefore, unless founded at depth (e.g., on piles), the new sanitary sewer replacement pipeline will develop sags in the future as a consequence of continued ongoing Bay Mud consolidation settlement. Supporting the new sanitary sewer replacement pipeline at depth is economically unfeasible for small-diameter sanitary sewer pipelines. Pipeline design and long-term expectations for the pipeline must therefore include continuing, on-going consolidation and settlement of the thick underlying Bay Mud.

Assuming no significant new loading on the Bay Mud in the project areas (i.e., no new fills), the rate of future total and differential settlement in the new replacement sanitary sewer pipeline will be less than that which has developed in the existing pipeline. As described in Section I.2.4.1, portions of the Gate 5 Road Area south of Harbor Drive have been raised with about 4 feet of fill within the last few years. The resulting rise in ground surface elevation due to this new fill is visible in Towill's 1968 to 2007 terrain elevation difference analysis of Sausalito (2009). We anticipate that the rate and amount of future total and differential settlement in the new sanitary sewer replacement pipeline in the Gate 5 Road Area south of Harbor Drive will be significantly greater than in other areas of the project due to this relatively new areal fill loading. Based on an underlying Bay Mud thickness on the order of 100 feet beneath all project pipelines, we estimate that between 2 and 3 feet of total Bay Mud consolidation settlement will occur in the next 50 years in the newly fill-raised area of the project (i.e., Gate 5 Road Area south of Harbor Drive). Elsewhere in the project areas, we estimate that between 1 and 2 feet of total Bay Mud consolidation settlement will occur in the next 50 years given the existing long-term loading conditions that date back to the 1970s and earlier (see Section I.2.4).

Over the long-term, the new pipelines will most likely develop sags from differential settlement in the same locations as the existing pipeline. To the greatest extent possible and practical, the new pipeline design should incorporate past performance into new design. For example,

increase pipe slopes where possible to off-set on-going settlement. In addition, a jointless pipe such as HDPE or fusible PVC will eliminate problems with settlement-induced joint spreading and inflow and infiltration (these pipe materials will also eliminate problems associated with soil corrosivity).

Notwithstanding the effects of ongoing, long-term consolidation settlement of the underlying Bay Mud (i.e., the same conditions that have affected the existing sanitary sewer pipeline since its construction), we conclude that the geotechnical conditions in the project areas are suitable for construction of the replacement project (i.e., there are no fatal flaws). In addition to ongoing, long-term consolidation settlement of the underlying Bay Mud, our geotechnical investigation identified a variety of other conditions in the project areas that will require attention by designers and contractors in order to successfully design and construct the project in a safe and economic manner and to ensure its useful long-term performance. A summary of some of the critical geotechnical conditions described in this report include the following:

- High groundwater and proximity to tidally-influenced sea level in Richardson Bay;
- Old uncompacted areal fills of variable composition and consistency that include highly-porous and permeable non-cohesive granular crushed bedrock materials (i.e., materials subject to flowing behavior where unsupported below groundwater) that will have little to no stand-up time and are capable of storing and transmitting large amounts of groundwater;
- Existing and/or abandoned sanitary sewers and utilities with variable bedding and backfill geometries (vertical or side-sloped), types, and consistencies. Some of the bedding and backfill may be porous, non-cohesive and granular (i.e., materials subject to flowing behavior where unsupported below groundwater) with little to no stand-up time and capable of storing and transmitting large amounts of groundwater;
- Thick (approximately 100 feet) native, soft and compressible Bay Mud that is and will continue to consolidate and cause total and differential settlement (sags) in overlying fills, utilities (including the new sanitary sewer replacement pipeline), pavements and structures;

- The unknown location of old (1940s), wooden, driven piles relative to the planned new sanitary sewer replacement pipeline and related structures;
- Former railroads, pavements and structures dating back to the 1800s;
- Corrosive soils;
- Construction vibrations; and
- Seismic shaking.

Soil and groundwater contamination is a potentially critical condition for the project; however, its study is outside the scope of our work for this geotechnical investigation.

The following sections contain our specific geotechnical conclusions and recommendations for the design, construction and useful long-term performance of the project with respect to these and other geotechnically-related conditions.

3.1 Existing Pipeline Abandonment

All existing pipeline to be replaced and/or abandoned should be completely removed or completely filled with CLSM (see Section II.3.4.4) to prevent open conduits from collecting and/or conducting drainage waters and/or collapsing in the future. Accurate and complete as-built documentation of abandonment work should be kept. Removal and/or in-place abandonment of AC pipe, if any is encountered in the project areas, requires special procedures and handling in accordance with regulations of the Environmental Protection Agency and Bay Area Air Quality Management District.

3.2 Design Groundwater Levels

The depth to groundwater encountered in test borings is summarized in Table I-3, Section I. The shallowest depth to groundwater recorded in project test borings drilled in July 2009 (summertime) was in Boring B-2 where groundwater was measured at a depth of 4 feet below ground surface immediately after drilling and before the boring was grouted. The shallowest depth to groundwater recorded in reference test borings was in Reference Boring RB-8 where groundwater was measured at a depth of 1½ feet in January 1984 (wintertime). Groundwater was also encountered at a depth of 2 feet below ground surface on January 5 and 6, 1977, in

reference test borings RB-1, RB-2, and on February 3, 1995, in RB-9. Portions of both the Gate 5 Road and Spinnaker Areas of the project are mapped within FEMA's 100-year flood hazard areas (ABAG, 2009).

3.2.1 Temporary Construction

Assuming a summertime construction period, the contractor should use a design groundwater depth of 4 feet below ground surface for preliminary design of temporary shoring and dewatering systems. However, the project specifications should require that the contractor's final shoring system design and implementation, and the contractor's final dewatering system design and implementation, be based on the actual groundwater depth at the time of construction, including from any perched groundwater encountered above static equilibrium groundwater depths.

3.2.2 Permanent Project Elements

A long-term groundwater level equivalent to the ground surface in the project areas should be used for the design of permanent subsurface project structures (for example, with respect to lateral pressures and buoyancy of the pump station and grease interceptor).

3.3 Temporary Excavations

Temporary excavations consisting of vertical-walled trench excavations for open-cut installation will be required for (1) new sanitary sewer replacement pipeline with invert depths on the order of 4 to 13 feet below ground surface, (2) a grease interceptor with an invert depth on the order of 6 to 8 feet below ground surface, and (3) a new sanitary sewer pump station at an unknown invert depth (see Table I-3, Section I). Based on our test borings and research, project excavations will extend below the groundwater level and will be entirely within trench backfill of the existing sanitary sewer to be replaced and areal fills over Bay Mud as described in Section II.2.1. All excavations will require shoring and dewatering and/or ground improvement. The project specifications should make the contractor solely responsible for the design, installation,

performance and removal of all shoring and related items (e.g., dewatering and ground improvement systems where used). The contractor should be required to submit his proposed shoring, dewatering and ground improvement systems to the owner for review prior to their implementation. The submittal should contain alternative and contingent systems that the contractor will be prepared to implement should the initial systems not achieve the minimum performance requirements described herein.

3.3.1 Excavatibility

Project excavations in trench backfill and areal fills as encountered in project test borings (see logs in Appendix B) can generally be made with appropriately-sized conventional excavators. Project excavations through (1) pavements of varying age, thickness and materials (Section II.2.1.1), (2) old abandoned and currently concealed railroads or driven wood piles (Section I.2.4) or (3) where hard debris or rubbish are encountered in areal fill (e.g., see concrete block encountered at a depth of 8½ feet in Reference Test Boring RB-5), if any, may require special excavation equipment and methods (e.g., hoe-rams, jack hammers). Contractors must independently evaluate the excavatibility of the subsurface materials to be encountered during project construction and choose appropriate excavation equipment and methods.

3.3.2 Dewatering

All construction in project excavations should be performed in the dry. Dewatering and/or "water-tight" shoring will be a critical component to successful construction of the project. The groundwater level within open bore holes is above the invert of the planned new sanitary sewer replacement pipeline at 4 of the 6 project test boring locations (i.e., at locations of Borings B-1, B-2, B-4 and B-6). Based on our groundwater findings and the anticipated project excavation depths (summarized at the test boring locations in Table I-3, Section I), dewatering or water-tight shoring should be planned for all excavations greater than 4 feet in depth. The contractor should be made solely responsible for the design, construction, and effects of temporary dewatering systems, and the contractor should be required to submit dewatering plans to the owner for review prior to implementation.

The design of the dewatering systems should be based on the actual groundwater inflow into excavations at the time of construction and the type of shoring used (e.g., interlocking driven sheet piles with adequate toe embedment can reduce or eliminate external dewatering requirements). For short-term excavations (i.e., trench excavations open less than 24 hours) and where the groundwater level is at or below the invert of the planned new sanitary sewer replacement pipeline, a stable trench bottom may be maintained by an internal dewatering system consisting of regularly-spaced, rock-filled sumps excavated below the trench bottom. Submersible pumps within the rock-filled sumps will remove collected groundwater. The spacing and depth of these sumps and the foundation rock between sumps should be such that the trench bottom is relatively dry and stable, and capable of supporting compaction of pipe bedding material.

Where the invert of the planned new sanitary sewer replacement pipeline is below the groundwater level, external dewatering efforts such as dewatering wells, well points, trench drains, or the installation of a water-tight shoring system will be required. Water-tight shoring typically consists of continuous, pre-driven interlocking sheet piles which have been driven with sufficient toe embedment to prevent groundwater flow to and boiling (i.e., piping) in the excavation bottom. The depth of shoring toe embedment will be dependent upon the difference in elevation between the trench bottom and groundwater level (that is, unbalanced hydraulic head).

Even where water-tight shoring is used, we anticipate that limited internal dewatering (i.e., pumping from rock-filled sumps inside the excavation) will be required to remove nuisance water and minor seeps.

Dewatering methods will need to vary within the project areas to account for variations in subsurface conditions, proximity to drainageways, groundwater depth, required excavation depths, and dewatering method limitations related to the grain size of the soils being dewatered. The limitations of various methods of dewatering relative to the particle (grain) size of the water-bearing soils are illustrated on Plate II-5. Grain size distributions for project soils to be

dewatered are plotted on Plate C-2 in Section I, Appendix C. Based on a comparison of these plots with Plate II-5, there is a potential for high rates of groundwater inflow into project excavations through the granular areal fills in the project areas.

Collectively, the contractor's project dewatering system(s), together with his project shoring and/or ground improvement systems, are to preserve the undisturbed bearing capacity of the existing subgrade soils at the bottom of excavations and meet all of the following minimum performance requirements:

- Provide stable excavation walls and bottom;
- Provide a reasonably dry base of excavation;
- Filter native soil and prevent loss of ground from dispersion and erosion;
- Prevent piping (boiling) of the excavation bottom;
- Draw down the groundwater level to 3 feet below and beyond the excavation bottom and sidewalls where shoring is not designed to resist hydrostatic pressures;
- Prevent damaging settlement to nearby structures, utilities and/or pipelines;
- Be installed and removed in accordance with governing (e.g., County and State) requirements; and
- Allow for controlled release of groundwater to its static level in a manner that prevents disturbance of the bottom soils and prevents flotation or movement of structure or pipelines.

The project specifications should require that the contractor's dewatering, shoring and ground improvement submittals contain alternative contingent systems, and that the contractor be prepared to implement alternative systems should the initial systems not achieve these minimum performance requirements. Uncontrolled seepage of groundwater through excavation sidewalls or bottom will cause the excavations to be unstable and unsuitable for pipeline and related structural support. Consequently, the contractor should be prepared to locally dewater or modify (e.g., by ground improvement) construction excavations, if and where needed, to provide stable and reasonably dry excavations.

Prolonged dewatering will cause an increase in effective stress on the underlying Bay Mud which will lead to consolidation and area subsidence. Settlement monitoring points should be provided between the locations of dewatering wells and on nearby critical structures, utilities, and pipelines. These settlement monitoring points should be regularly monitored during active dewatering to measure related ground settlement, if any. Modifications to the contractor shoring and dewatering systems should be required if settlements are measured, or if damaging settlements are likely to occur, given anticipated future rates of dewatering and the location of dewatering relative to the existing critical structures, utilities, and pipelines.

3.3.3 Shoring

The contractor should be required to shore all project excavations in accordance with Cal/OSHA regulations. The contractor should be made solely responsible for the selection, design, construction, removal and effects of shoring noting the following:

- Project excavations will be located (1) within backfill of the existing pipeline to be replaced, (2) parallel to and/or across backfill for other existing utilities, and (3) within areal fills all of which will be over soft compressible Bay Mud (see Sections II.2.1.2 and II.2.1.3). Project excavations will therefore encounter various types of fill including granular, non-cohesive materials that will tend to run or ravel when dry or flow when saturated with groundwater (i.e. have little to no stand-up time in unshored vertical excavations). Unsupported vertical excavations in flowing, running or raveling ground will most likely experience excavation wall loss and related undermining of adjacent pavements, utilities, and structures. Therefore, excavations into these types of materials must (1) have water-tight shoring (i.e., continuous interlocked steel sheet piles with toe embedment), (2) be externally dewatered and fully shored (e.g., full excavation face coverage with plywood or steel plate backing of trench boxes or speed shores), and/or (3) improve the ground (e.g., permeation grouting) prior to excavation.

- Active shoring systems (e.g., braced driven sheet piles with toe embedment) are preferred to minimize surface settlement and roadway and adjacent utility damage. Aluminum hydraulic speed shores with full solid sheet backing may only be used for excavations where the external groundwater level has been drawn down to at least 3 feet below the depth of excavation base and where the soils have sufficient stand-up time for its safe and complete installation (i.e., not in running, flowing or fast-raveling soils).

- Passive shoring systems such as trench boxes should only be used for excavations where (1) the external groundwater level has been drawn down to at least 3 feet below the depth of excavation base, (2) excavation occurs from within the box as it is lowered incrementally into place and in step with the deepening excavation (i.e., so as to provide continuous full-face excavation side-wall support), and (3) any gaps between the outside face of the trench box and vertical soil cut is immediately filled with sand or gravel. Driving steel backer plates alongside and below the trench box excavation should be performed to provide additional base stability. Excavation below and prior to trench box shoring installation should not be permitted where soils have insufficient strength and stand-up time (e.g., in flowing, running or fast-raveling ground conditions) to safely and completely install the trench box.

- Where shoring systems are not used in conjunction with external dewatering systems designed to draw down the groundwater level a minimum of 3 feet below the excavation bottom and beyond the excavation sidewalls, the shoring systems must be designed to resist hydrostatic pressures and to extend below the base of the excavation to sufficient depths to (1) provide lateral stability at the base of the shoring system and (2) to prevent heave and/or piping (boiling) through the base of the excavation. The shoring designer should determine the minimum required toe embedment based on the depth of the excavation, the specific shoring and dewatering systems used, and the soil and groundwater conditions encountered in the field at the time of construction. For the purposes of sheet pile design, the average buoyant unit weight of area fill and Bay Mud soils in the project areas, to depths of the invert of

the planned new sanitary sewer replacement pipeline, can be taken as 70 pcf and 40 pcf, respectively, with a critical hydraulic gradient of 1.0 and 0.8, respectively. We recommend that a minimum safety factor of 2.0 be used for design of project shoring and dewatering systems against base failure.

- Shoring systems that do not provide positive support to excavation walls (i.e., passive shoring like trench boxes that allow inward movement of the trench wall) may cause surface settlement and related damage to nearby roadways, utilities and structures. A summary of the potential surface settlement of passively-shored excavations is provided in Table II-3. Unrestricted flowing, running, or raveling ground conditions will result in surface settlements significantly greater than that indicated in Table II-3.

Table II-3 - Potential Surface Settlement of Passively-Shored Excavations

Soil Type	Surface Settlement (% of Excavation Depth)	Lateral Zone of Disturbance (Multiples of Excavation Depth)
Sand	0.5%H	H
Soft to Medium Stiff Clay	1-2%H	3-4H
Stiff Clay	<1%H	2H

[1] From Suprenant and Basham (1993).

- Preliminary design of braced and cantilever shoring may be based on the preliminary lateral earth shoring pressure diagrams provided on Plates II-6 and II-7, respectively. These diagrams represent soil conditions encountered in project test borings. Final earth pressures and pressure diagrams for the contractor's design and implementation of individual shoring systems will be dependent on (1) the actual soil and groundwater conditions encountered during construction, (2) the contractor's shoring type, design, and installation method, and (3) surcharge pressures, including those from stockpiling, construction equipment, vehicle traffic, and existing structures within a 1.5H:1V plane projected upward from the excavation bottom (see Plate II-8 for minimum surcharge pressures).

A professional Structural or Civil Engineer licensed in the State of California and with experience in the design of shoring systems should design, sign, and stamp the contractor's proposed shoring plans. The plans should be required to be submitted to the owner for review

prior to construction. The shoring plans should indicate interrelationships with dewatering and ground improvement systems. The shoring plans should contain alternative contingent systems, and the contractor should be prepared to implement these alternative systems should the initial plans not achieve the following minimum performance requirements:

- Protect personnel that enter the excavation.
- Comply with all governing regulations pertaining to excavation safety (e.g., the most current edition of Cal/OSHA Construction Safety Orders, Article 6).
- Be compatible with the surface and subsurface soil and groundwater conditions encountered in project test borings, and/or mapped in the project areas, and resist lateral earth pressures and hydrostatic pressures.
- Protect existing utilities, pavements, and structures.
- Excavation and installation of shoring must occur in a manner and sequence that does not damage existing structures, pavements, and utilities including through settlement, heave, or vibrations.
- Prevent caving (i.e., raveling, running, or flowing) or lateral movement of excavation walls and associated loss of adjacent ground and adjacent ground surface settlement, even when subjected to construction vibrations.
- Provide stable excavation walls and bottom (e.g., prevent bottom heave).
- Allow for removal or abandonment of shoring in a manner and sequence that (1) is in step with the backfilling sequence (i.e., shoring should not be removed ahead of backfilling), (2) does not cause disturbance (i.e., loosening) of pipe bedding and pipe embedment material, and (3) does not damage the existing pipeline or structures, pavements, and utilities including through settlement, heave, or vibrations (contractor to address removal/abandonment concerns specific to the type of shoring proposed in the shoring submittal). Any void space created by shoring removal should be completely filled with CLSM (see Section II.3.4.4) or approved equivalent.
- Resist lateral earth pressures including those from lateral loads from vehicular traffic, construction equipment and spoils, and hydrostatic pressures, if and where applicable.

Soil conditions can vary widely over short lateral and vertical distances in the project areas; therefore, project excavations should be continually monitored and documented by the contractor's Cal/OSHA approved "competent person", and the contractor should be prepared to make changes and modifications to shoring requirements in response to these changes and consistent with governing regulations (e.g., the most current edition of Cal/OSHA Construction Safety Orders) pertaining to excavation safety. Cal/OSHA soil classifications include the following:

Stable Rock: Natural solid mineral matter that can be excavated with vertical sides and remain intact when exposed.

Type A Soil: Excludes material that is part of a sloped or layered system dipping into the excavation at a slope ≥ 4H:1V, but includes cohesive soil with an unconfined compressive strength of ≥ 1.5 tsf that is:

- Not fissured,
- Not subject to vibration from heavy traffic, pile driving, or similar effects, and
- Not been previously disturbed.

Type B Soil: Excludes material that is part of a sloped or layered system dipping into the excavation at a slope ≥ 4H:1V, but includes the following:

- Cohesive soil with unconfined compressive strength between 0.5 and 1.5 tsf,
- Angular gravel and silt,
- Previously disturbed soil, except that is otherwise classified as Type C,
- Soil fissured or subject to vibration and not otherwise Type C soil, or
- Dry rock that is not stable.

Type C Soil: Excludes material that is part of a sloped or layered system dipping into the excavation at a slope ≥ 4H:1V, but includes the following:

- Cohesive or disturbed soils with unconfined compressive strength ≤ 0.5 tsf,

- Sand and non-angular gravel,
- Submerged soil or soil from which water is freely seeping, or
- Submerged rock that is not stable.

The subsurface soils encountered in test borings and mapped in the project areas were consistent with a Cal/OSHA soil classification Type C.

The contractor should be required to provide special shoring design for owner review in cases where excavations will be in close proximity (below an imaginary plane projected downward at an inclination of 1.5H:1V from the nearest foundation or utility edge) to critical structures or utilities in order to minimize potential excavation-related damage. Special shoring should account for surcharge pressures and should be designed to maintain positive lateral support for adjacent structures and utilities. Areas requiring special shoring should also receive preconstruction condition surveys to establish a baseline against which any claimed third-party damages can be compared.

3.3.4 Ground Improvement

Granular, non-cohesive areal fills and trench backfill soils capable of raveling, running, or flowing ground behavior (see definitions on Plate A-1, Appendix A) will be encountered in project excavations. These types of soils will have little to no stand-up time in unshored vertical excavations and may need to be stabilized by ground improvement (e.g., grouting) where not completely and continuously shored and/or dewatered. Inadequately stabilized and/or shored excavations will allow existing nearby utilities, structures and roadways to be damaged by loss of support, undermining, or vibration-induced settlement. Stabilization of these types of soils can be accomplished through grout stabilization (e.g., displacement, permeation or jet grouting) by a specialized and experienced grouting contractor. The contractor should be made solely responsible for design and implementation of grout stabilization systems, and should require that the proposed systems be submitted to the owner for review prior to implementation.

3.4 Foundation, Pipe Embedment and Trench Backfill Materials

Foundation, Pipe Embedment and Trench Backfill Materials should conform to the requirements of this section where not exceeded by the City or governing agency or pipe manufacturer requirements, and so long as they will not cause damage or deformation to the pipeline or its coatings, if any. Refer to Plate II-9 for trench backfill details.

The recommendations provided in the following sections will need to be modified if and where the planned new sanitary sewer replacement pipeline or related project structures are found to be over old driven wood piles described in Section I.2.4. Whether or not portions of the planned new sanitary sewer replacement pipeline or related project structures are over old driven wood piles may not be known unless encountered in excavations during project construction. Modifications to the recommendations provided in the following sections will need to be addressed on a case by case basis at that time depending on the number, spacing and location of the piles encountered. If and where driven wood piles are encountered, we anticipate that the modifications to the construction of the planned new sanitary sewer replacement will include the following:

- Removing the top of the wood pile to a depth of at least 5 feet below the invert of the planned new sanitary sewer replacement pipeline, and
- Backfilling the removed pile space, up to the bottom of planned Foundation Material, with lightly-compacted trench excavation material so as to not create a hard point below the pipeline (such a hard point could eventually result in a hog in the overlying pipeline).

3.4.1 Foundation Material

Where the trench bottom at the planned excavated grade is soft, loose, or disturbed by construction activity, or otherwise unstable (e.g., pumping subgrade under foot load, boiling, etc.), overexcavation should be required until either (1) a firm material is reached or (2) a firm base can be created by the placement of a layer of Foundation Material. Based on the loose condition of areal fills encountered at the invert depth of the planned new sanitary sewer

replacement pipelines in project test borings (see boring logs in Appendix B), we anticipate that a layer of Foundation Material will be required for all excavations. The Foundation Material layer should consist of clean, natural, durable 1½-inch crushed (i.e., angular) rock that is graded within the requirements provided in Table II-4 and wrapped with a 12-inch minimum overlap of geotextile filter fabric. The thickness of the Foundation Material layer should not be less than 12 inches thick.

Table II-4 - 1½-inch Crushed Rock

Sieve Size	Percent Passing
2"	100
1½"	90 – 100
3/4"	5 – 30
3/8"	5 – 20
No. 200	0 – 4

The geotextile fabric should be a non-woven material consisting of polyester, nylon or polypropylene filaments formed into a stable network and conforming to properties in Table II-5. The fabric should be permeable, inert to commonly encountered chemicals, rot-proof, resistant to ultra-violet light, and not act as a wicking agent. Mirafi 160N, Amoco Propex 4506, or similar geotextile filter fabrics which meet the criteria given in Table II-5 are acceptable.

Table II-5 - Geotextile Fabric

Property	Test Value	ASTM Test Method
Weight	5.4 oz./yd.^{2} (min.)	D5261
Grab tensile strength	150 lb. (min.)	D4632
Elongation at break	50% (max.)	D4632
Puncture strength	80 lb. (min.)	D4833
Burst strength	300 psi (min.)	D3786
Apparent Opening Size	#70 (max.)	D4751
Permittivity	1.0 sec^{-1} (min.)	D4491
UV Resistance	70% (min.)	D4355

3.4.2 Pipe Embedment Material

Pipe Embedment Material should envelop the pipeline to the dimensions illustrated on Plate II-9. Pipe Embedment Material should consist of either (1) clean, durable, natural, crushed (i.e., angular) rock meeting the gradational and quality requirements for Caltrans Class 2 Aggregate Base (Class 2AB) provided in Table II-6 and compacted as recommended in Section II.3.4.6, or

(2) CLSM as specified in Section II.3.4.4, particularly where compaction is not possible due to working space constraints.

Table II-6 - Class 2AB

Sieve Size	Percent Passing	
1"	100	
3/4"	90-100	
No. 4	35-60	
No. 30	10-30	
No. 200	2-9	
Test	**California Method No.**	**Requirement**
Resistance (R-Value)	301	78 min.
Sand Equivalent	217	22 min.

3.4.3 Trench Backfill Material

In paved areas, or areas to receive improvements, trench excavations should be backfilled above the pipe embedment zone with (1) Class 2AB (see Table II-6) and compacted as recommended in Section II.3.4.6, or (2) CLSM as specified in Section II.3.4.4.

3.4.4 Controlled Low Strength Material (CLSM)

Controlled low strength material (CLSM) should consist of the following:

- A hand-excavatable mixture of cement, pozzolan, coarse and fine aggregate, and water that has been mixed in accordance with ASTM C94 and is in a flowable state during placement;
- A maximum in-place density of 150 pcf;
- A minimum 28-day compressive strength of no less than 50 psi and a maximum 28-day compressive strength of no more than 150 psi;
- A minimum 12-hour compressive strength of no less than 20 psi;
- Physiochemical properties that do not damage the pipeline; and
- Placed in appropriate lifts or with methods to prevent movement of the pipe, including by flotation.

Placement of backfill on top of CLSM should not be allowed until the CLSM passes the ball drop test of ASTM D6024.

Where CLSM is used as pipeline embedment material, the pipeline should be elevated off of the trench bottom or foundation material using cradles, sandbags, or other approved supports prior to CLSM placement. Spacing of these supports is dependent on the pipeline material, diameter and structural properties, as well as the permissible amount of sagging which can be allowed between supports.

Pipelines backfilled using CLSM have a tendency to float. This tendency can be mitigated by the use of pipe anchors/weights and/or sequential backfilling (where the CLSM is poured in stages, and allowed to set in between stages). For sequential backfilling, the height to which the CLSM can be initially poured is a function of the buoyant forces imposed on the pipeline, and the amount of resistance provided by the pipeline anchoring/weighting system (if used). Sequential backfilling will require the trench excavation to remain open for a longer period of time, which may not be practical where the project alignment is within the traveled portion of a roadway.

3.4.5 Compaction

The project specifications should make the contractor solely responsible for excavation backfill compaction, and solely responsible to protect the new sanitary sewer replacement pipeline from damage at all times, including during placement and compaction of Pipeline Embedment and Trench Backfill Materials. Project excavations should be shored so that vibrations from construction activities (e.g., compaction equipment) will not cause raveling or running from the excavation sidewalls. Additionally, all water that accumulates in the bottom of the excavation should be removed so that project work can be done in the dry. No jetting of backfill should be allowed. The following recommendations assume that the planned pipeline can support mechanical compaction of Pipe Embedment Material and/or Trench Backfill Material as recommended herein. Where this is not the case, then the Pipe Embedment Material and/or Trench Backfill Material should consist of CLSM (see Section II.3.4.4). All references to

relative compaction are in accordance with laboratory maximum density/optimum moisture content by ASTM D1557.

Foundation Material should be densified in place (using a Vibra-plate compactor or equal) to provide a stable trench bottom capable of supporting mechanical compaction of the Pipe Embedment Material. Pipe Embedment Material should be compacted to a minimum of 90% relative compaction at a moisture content at or above optimum. The Pipe Embedment Material at the bottom of the pipe (i.e., pipe subgrade) should be compacted to a smooth, uniform plane to match the desired pipe slope. Where applicable, flange or bell holes should be excavated out at each pipe joint to ensure uniform pipe support to proper line and grade over the full length of each pipe segment.

After the pipe is laid in the trench, Pipe Embedment Material should be uniformly placed in maximum 8-inch thick lifts on each side of the pipe and hand-shovel sliced around the pipe haunches to support the sides of the pipe and to prevent pipe displacement, and then compacted to 90% relative compaction at or above optimum moisture condition. Compacting and testing Class 2AB below the pipe springline will be dependent on the trench width selected for installation of the pipeline, shoring and dewatering systems. It may not be practical to test the Class 2AB below the springline with less than 12 inches of side clearance between the pipe and trench/shoring wall. Above the springline of the pipe, the Pipe Embedment Material should be placed in maximum 8-inch thick loose lifts and compacted to a minimum of 90% relative compaction at or above optimum moisture content. Removal of shoring must not cause disturbance (i.e., loosening) of the compacted pipe embedment material.

Trench Backfill Material should be placed in maximum loose lifts of 8 inches above the Pipe Embedment Material. Trench Backfill Material should be compacted to a minimum of 90% relative compaction to within 3 feet of the pavement subgrade and to a minimum of 95% relative compaction within the upper 3 feet of backfill.

Inadequate compaction of utility trench backfill (i.e., less than that recommended herein) may cause excessive settlements resulting in damage to the pavement and other surface improvements.

3.4.6 Trench Dams

Trench dams, like that illustrated on Plate II-10, can be incorporated into the project design to minimize lateral subsurface flow of groundwater within permeable Foundation Material, Pipe Embedment Material, and Trench Backfill (e.g., to isolate any areas of known groundwater contamination). Trench dams will also minimize the amount of dewatering that would otherwise be required to access the pipeline during future maintenance and point repair excavations.

3.5 External Pipeline Loads

The type of pipe to be used for the planned new sanitary sewer replacement pipeline is not known to us at this time. Dead loads from soil on rigid and flexible pipeline are described below. Additionally, design criteria for live loads on the pipeline from vehicular traffic (H20 loading) are provided on Plate II-11. The total unit weight of CLSM (see Section II.3.4.4) or compacted Class 2AB (see Table II-6) may be taken as 150 pcf.

3.5.1 Rigid Pipe

Design criteria for dead loads on rigid pipe under trench conditions are presented on Plate II-12.

3.5.2 Flexible Pipe

Dead loads due to backfill soil overburden on a flexible pipeline assuming trench conditions can be estimated using the following Prism Method based formula (Moser, 2001):

$$W = D \gamma H$$

where: W = vertical soil load on a flexible pipeline due to trench backfill/overlying soil (pounds/linear foot),

D = pipe outside diameter (feet),

γ = unit weight of trench backfill (pcf), and

H = height of trench backfill above the pipeline (feet).

3.6 Composite Modulus of Soil Reaction

The composite modulus of soil reaction (E'_c) is useful for estimating the passive soil resistance that will develop upon vertical loading of flexible pipelines. E'_c is a function of the soil modulus of the pipe zone material (E'_{pz}), the soil modulus of the trench wall material (E'_{tw}), trench width, pipeline depth of cover, and pipeline diameter (see Plate II-13). E'_{pz} and E'_{tw} are in turn functions of the strength of each material. Where the new sanitary sewer replacement pipeline is bedded in well-compacted Class 2AB as recommended in Section II.3.4.2, E'_{pz} will be constant at approximately 1,500 psi. It is imperative that properly-compacted pipe zone material not be disturbed or loosened by shoring removal in order to maintain this 1,500 psi E'_{pz} value.

E'_{tw} varies in proportion to the consistency/density of the soils forming the trench walls. The soils encountered in project test borings in the project areas at the invert depth of the new sanitary sewer replacement pipeline were loose to medium stiff (average SPT blow count of N = 5, for 8 project tests). Typical (1) E′tw values for a range of soil consistency/density, and (2) corresponding E′tw:E′pz ratios are provided in Table II-7.

Table II-7 - E′c Input Values

E'_{tw} Value[1]		$E'_{tw} : E'_{pz}$ Ratio (E'_{pz} = 1,500 psi)
Soft soil (N=2)	125 psi	0.08
Medium stiff or loose soil (N<8)	250 psi	0.17

[1]N = standard penetration blow count.

Using the chart provided on Plate II-13 and based on an appropriate E′tw: E′pz ratio, the soil support combining factor Sc can be determined for the actual trench width to pipeline diameter ratio used in design. The Sc factor can then be used to calculate E′c based on the formula

E′c=ScE′pz. For example, assuming E′pz = 1,500 psi and E′tw= 250 psi, then E′tw:E′pz = 0.17. From Plate II-13, and assuming a B:D ratio of 1.5 (the actual B:D ratio to be used is not known to us at this time), then a E′tw :E′pz = 0.17 corresponds to a Sc = 0.25. Completing the equation for E′c=ScE′pz gives E′c= 0.25(1,500) = 375 psi.

3.7 Thrust Blocks

Thrust forces from internal pressure within the 4-inch force main portion of new sanitary sewer replacement pipeline may be resisted by thrust blocks. Project plans (West Yost Associates, 2009) show the force main to be an approximately 593-foot long straight segment between existing manholes that will connect to gravity portions of the new sanitary sewer replacement pipeline. Thrust block capacity is a function of soil type, depth below ground surface, allowable deflection and direction of force application (e.g., upward vs. downward vertical component of thrust). Thrust block design should occur in the following three steps:

- Preliminary design based on minimum depths, anticipated soil and bedrock type and presumptive allowable horizontal soil and bedrock bearing capacity;
- Plan design based on the geotechnical engineer's review of depth of embedment and direction of thrust application; and
- Final design with field adjustments during construction based on actual in-field subsurface conditions (e.g., adjustment for the presence of adjacent utility trenches, perched groundwater, localized changes in soil or bedrock condition, etc.).

For purposes of preliminary design, thrust blocks may be sized using a presumptive allowable soil bearing capacity of 400 psf for pipeline thrust blocks in loose areal fill as encountered in the project test borings near the force main (see logs of Borings B-5 and B-6 in Appendix B, Section I). This presumptive allowable soil thrust block bearing capacity is based on horizontal or downward thrusting only (do not use for upward thrust) using a thrust block having a minimum width of 12 inches and a minimum height of 24 inches. The maximum height of the thrust block must be less than one-half the depth from the ground surface to the base of the thrust block. Based on this presumptive thrust block design, the thrust block deflection will be limited to less

than ½ inch. Final thrust block capacity should be evaluated in the field during construction prior to pouring concrete and should be based on final thrust block depth, configuration, and the strength and safe bearing capacity of the exposed soils.

3.8 Permanent Subsurface Structures

Permanent subsurface structures planned for the project consist of a new manhole at Station 20+77, a new grease interceptor adjacent to this new manhole, and a new pump station at Station 18+89 (at an existing manhole); all near the east end of the Spinnaker Area of the project. Except at Station 20+77, the project plans (West Yost Associates, 2009) show the new sanitary sewer replacement pipeline to flow through existing manholes. The planned invert of the new manhole is about El. 4 (about 4 feet deep) and the planned invert of the new grease interceptor is about El. 0 (between 6 to 8 feet deep). Details of the new sanitary sewer pump station at Station 18+89 (plan and profile dimensions) are not known to us at this time. The invert depth of the new manhole and new grease interceptor corresponds in nearby project test Boring B-5 to loose to soft to medium stiff areal fill overlying soft compressible Bay Mud.

3.8.1 Foundations

Foundations for the planned new permanent subsurface structures that are underlain by areal fill over soft Bay Mud may be designed based on load compensation (i.e., applied structural loading equal to or less than the weight of the soil removed to accommodate the structure) using an the allowable bearing capacity for mats of 500 psf for an 8-foot deep structure.

This loading can be increased by one-third where needed to resist transient loading on the structures (e.g., seismic forces). The new structures contribution to total long-term underlying Bay Mud consolidation settlement of the area will be negligible since their load compensation design constitutes no new loads. However, compensated structure excavations in Bay Muds will be subject to immediate recompression settlements of as much as 1 inch, which should occur quickly upon load application. The maximum differential undisturbed soil recompression across the base of the structures should be less than ½ inch.

These foundation recommendations are based upon an undisturbed base of excavation on which the structures will bear (i.e., dependent upon the performance of the contractor). For example, excavations that are not fully dewatered ahead of time or where groundwater has not been completely cut off (e.g., interlocking sheet pile with sufficient toe embedment) prior to excavating, will be subject to piping and boiling of the base of excavation and to consequent amounts of structure settlement significantly greater than that anticipated by solely undisturbed soil recompression effects.

Where the subgrade for permanent subsurface structures is found to be soft, loose, disturbed by construction activity, or otherwise unstable (e.g., pumping subgrade under foot load, boiling, etc.), we recommend that the subgrade be overexcavated to such a depth that a firm, stable base can be created by the placement of a layer of Foundation Material (see Section II.3.4.1). The thickness of the Foundation Material should not be less than 12 inches.

Subsurface structures including pre-cast elements or cast-in-place elements should be placed on a 6-inch layer of compacted Class 2AB (see Table II-6) overlying the geotextile-fabric-wrapped pipeline foundation material or undisturbed subgrade soils. This layer of Class 2AB should be compacted to a minimum of 90% relative compaction at a moisture content at or above optimum. The structure foundation concrete can then be poured directly on top of the compacted Class 2AB layer.

3.8.2 Structure Backfill Material and Compaction

Structure backfill material should consist of Class 2AB (see Table II-6) or CLSM (see Section II.3.4.4). Class 2AB structure backfill should be placed in maximum 8-inch thick loose lifts and compacted to a minimum of 90% relative compaction (ASTM D1557) at a moisture content at or near optimum to within 30 inches of the pavement subgrade. Within the upper 30 inches of backfill, Class 2AB structure backfill material should be compacted to a minimum of 95% relative compaction (ASTM D1557) at a moisture content at or near optimum. The project specifications should clearly state that at all times during the construction of project structures

and placement/compaction of structure backfill material, it is the contractor's responsibility to protect the project structures from damage (e.g., overstressing the structures with heavy equipment, etc.).

3.8.3 Resistance to Hydrostatic Forces

All permanent subsurface structures should be designed to resist buoyant uplift and lateral hydrostatic forces assuming a long-term groundwater level at the ground surface. Buoyant uplift can be resisted by the dead weight of the structure, friction between the exterior structure walls and the backfill soils, and/or by the weight of backfill soils above an exterior perimeter lip added to the foundation mat. In all cases, a minimum factor of safety of 1.5 should be used for design against hydrostatic uplift. Frictional forces that will resist buoyant uplift of subsurface structures may be calculated using the at-rest earth pressures in Table II-8.

A sketch illustrating design parameters for hydrostatic uplift resistance is presented on Plate II-14. Friction between subsurface structure walls and Class 2AB structure backfill may be calculated using the at-rest earth pressures on Table II-8 and an ultimate friction factor of 0.35. If an exterior perimeter lip is added to the foundation mat, hydrostatic uplift can be resisted by the weight of backfill soils within the prism shown on Plate II-14. A buoyant unit weight of 80 pcf can be used for Class 2AB.

3.9 Lateral Earth Pressures

Lateral earth pressures will be imposed on all subsurface structures for the project. Subsurface structures for the project are not free to deflect and therefore should be designed to resist at-rest earth pressures. Lateral earth pressures provided in Table II-8, expressed as equivalent fluid densities, are for permanent below-ground structures based on the composition and consistency of planned structural backfill, and the soils encountered in project test borings (see logs in Appendix B).

Table II-8 - Lateral Earth Pressures[1]

Ultimate Static Lateral Earth Pressures[1] in Project Areas Expressed as Equivalent Fluid Density (psf/ft in a triangular distribution)		
Soil Type & Condition	**At-Rest[2]**	**Passive[3]**
Areal Fill	50	125
Bay Mud	35	60
Class 2AB Structure Backfill (Table II-6)	35	300

1All values are based on buoyant unit weights with design groundwater at the ground surface. Appropriate safety factors should be applied. Assumes structures less than 15 feet deep. See text for additional applicable pressures.
[2]Add hydrostatic component (+62.4 pcf).
[3]For passive pressures, a safety factor of at least 2.0 should be applied to avoid the lateral movement of the structure that would be necessary in order to reach full ultimate passive soil strength mobilization.

The following modifications to design lateral earth pressures should be made to the static lateral earth pressures provided in Table No. II-8, where applicable:

- Lateral surcharge from vehicles (Plate II-8),
- Lateral surcharge from adjacent fills or structures where an imaginary 1.5H:1V plane projected downward from an existing or planned new structure projects above or intersects the side of the planned new adjacent structure,
- Dynamic pressures (Pe) from seismic shaking. A dynamic earth pressure of Pe = 14 x H, expressed as pounds per square foot, should be applied as a rectangular distribution over a depth of H (where H = depth of wall embedment below grade in feet) assuming peak ground accelerations of 0.5g from Plate II-3 and a buoyant unit weight of 90 pcf (buoyant unit weight of Class 2AB used as structural backfill). The resultant should be applied at a distance of 0.6H from the bottom of the structure. The design ground surface acceleration has been factored for an acceleration taken as 80% of the peak (i.e., 0.5g x 0.80 = 0.4g).

Overcompaction of structure backfill is to be avoided because increasing the compactive effort can result in damaging lateral pressures that are higher than those provided in Table II-8. In addition to lateral earth pressures, an ultimate coefficient of sliding friction value of 0.35 between concrete structures and compacted Class 2AB (see Table II-6) can be used in calculations for lateral force resistance.

3.10 Settlement

From a practical viewpoint, and with the exception of ongoing, long-term, area-wide Bay Mud consolidation settlement (see Section II.2.1.4), the amount of settlement caused by the new sanitary sewer replacement pipelines and related project structures (e.g., the grease interceptor) will be minimal since no new loads will be applied. Localized settlement of the pipelines and project structures will depend mostly on the condition of the excavation bottom (i.e., mostly determined by the contractor's performance in achieving the minimum recommendations for trench bottom stability provided in this report). Therefore, it is imperative that stable excavation bottoms are maintained at all times and that loose, disturbed or otherwise softened soils are not allowed in excavation bottoms. Backfill loading upon such soils can produce random settlements creating pipeline sags greater than 1 inch that can be abrupt and localized over short sections of pipeline.

3.10.1 Recompression Settlement

Project excavations will be backfilled to their original grade and compacted backfill will exert no significant additional loads onto the underlying undisturbed soil deposits. Therefore, elastic deformation (i.e., recompression) of the native materials induced by backfill placement and compaction should occur quickly upon load application. For example, the maximum recompression of undisturbed trench bottoms on the order of 10 to 15 feet deep in loose or medium stiff soils should be less than ½ inch and should occur upon backfilling. The maximum differential recompression between differing soil consistencies/densities along the pipeline should also be less than ½ inch.

3.10.2 Backfill Compression

Excavation backfill placed within excavations will compress (settle) by self-weight even when well compacted. We estimate settlement of Foundation Material, Pipeline Embedment Material, Trench Backfill Material and Structure Backfill Material compacted as recommended in this

report, to be less than 0.2 to 0.4 percent of their vertical thickness. Pavement sections overlying the sewer pipeline will reflect this long-term backfill settlement.

3.10.3 Vibration-Induced Settlement

Settlements damaging to the sanitary sewer replacement pipeline, related project structures and to adjacent improvements (e.g., existing underground utilities and street pavement) can occur as a result of soil densification upon vibration. Vibration-induced settlements occur as a result of localized liquefaction and densification of saturated, uniformly-graded, non-cohesive soils (e.g., nonplastic silts and sands). The loose granular areal fills, as encountered in project test borings, are particularly sensitive to vibration-induced settlements. Case histories cited by Lacy & Gould (1985) indicate several inches of pipeline settlement upon vibratory sheet pile extraction in these soil types. Therefore, all shoring extending into granular, non-cohesive areal fills should be installed and extracted with caution relative to the generation of vibrations; noting that static or "vibration less" shoring installation and removal may be required. The project specifications should require that shoring removal be performed in a manner that does not cause settlement of the new sanitary sewer replacement pipeline or any nearby surface or subsurface structure. The new sanitary sewer replacement pipeline and related project structures (grease interceptor, force main pump station, etc.) should be monitored for settlement when shoring is installed and removed. If settlement is observed during shoring installation or extraction, the contractor should be required to immediately stop and revise his methods of installation or extraction

3.11 Construction Vibrations

The planned project will be constructed in areal fills and existing utility and pipeline trench backfill over Bay Mud that will transmit construction vibrations to existing nearby surface (e.g., existing residential and commercial buildings) and subsurface structures (including utilities and pipelines). Therefore, the type and operation of equipment to be used during project construction should be selected by the contractor to limit construction vibrations (a function of frequency and peak particle velocity) to levels that will not damage existing surface structures and improvements, or existing subsurface structures including utilities and pipelines.

A commonly-accepted damage threshold criteria for high frequency peak particle velocity vibrations at existing surface structures and improvements is on the order of 1.0 to 2.0 inches per second (USBM RI-8507). High frequency peak particle velocities above these values can cause cosmetic damage to structures (e.g., cracking of plaster and drywall). Typical attenuation curves for vibratory pile driving indicate peak particle velocities are generally less than 1.0 inch per second at distances greater than 20 feet. Pile driving into obstructions or through coarse granular materials (e.g., gravelly fills, granular pipe embedment material and utility trench backfill) may generate higher than typical peak particle velocity vibrations with greater attenuation distances.

Construction vibrations should be monitored and documented by qualified technicians with approved vibration measuring equipment (seismographs) located at the residential and/or commercial structure nearest the site of actual ongoing construction. Vibration levels during construction should not exceed a 1.0 inch per second peak particle velocity. Vibration levels exceeding this value within 25 feet of the source or at nearby surface structures, whichever is closer, will require modification of the contractor's construction procedures to reduce vibration levels. Photographic precondition surveys of the residential and commercial structures located adjacent to the planned pipeline alignment should be performed to establish baseline conditions prior to project construction and to aid assessing construction damage claims, if any.

3.12 Roadway Pavements

Roadway pavements in, and which provide access to, the project areas will most likely be damaged by heavy construction traffic loads that are typically required for construction of this type of project. Therefore, repair of pavement damaged by construction traffic should be included as a bid item for contractors in the project documents. Pre- and post-construction pavement condition surveys should be performed prior to the start of construction in order to document baseline conditions. Pavement section replacement or repair should at least match the existing section. Additionally, pavement section replacement or repair should be designed for appropriate traffic indices and meet the requirements of local jurisdictions.

3.13 Seismic Design

The hazard of fault rupture in the project areas is extremely low to nil based on the absence of active faults (see Section II.2.3). The hazard of ground shaking in the project areas is high (see Section II.2.4). The effects of ground shaking on the project may be mitigated by design and construction detailing in accordance with the foundation and seismic provisions of the 2006 International Building Code (IBC)/2007 California Building Code (CBC) including the parameters provided in Table II-9.

Table II-9 - 2006 IBC/2007 CBC Seismic Site Categorization and Design Coefficients

Categorization/Coefficient	Design Values
0.2s Spectral Response Accel. (S_S) for Site Class B (Figure 1613.5(3))	1.5g
1.0s Spectral Response Accel. (S_1) for Site Class B (Figure 1613.5(4))	0.68g
Site Class (Table 1613.5.2)	F
Long-period Transition Period, T_L (Figure 22-6)[1]	12

[1] From ASCE/SEI 7-05 (2006).

The hazard of liquefaction in the project areas is high based on the shallow depth to groundwater and the presence of silts and loose sands in the areal fills located over soft compressible Bay Mud (see Section II.2.5). If liquefaction were to occur in the project areas, the manifestation of liquefaction would be settlement of the ground surface and localized settlement or buoyant floatation of pipeline and subsurface structures. Liquefaction in the project areas could also cause lateral spreading of the ground down gentle slopes into Richardson Bay. Liquefaction in the project areas could also cause lateral spreading of the ground down gentle slopes into Richardson Bay. For critical life-line facilities, mitigation should be undertaken to address the potential for soil liquefaction. However, the most common approach for small-diameter sanitary sewer pipelines and related subsurface structures is to repair any damage caused by liquefaction after the fact, if they occur.

3.14 Corrosion Design

The results of corrosion tests (i.e., resistivity, redox, pH, sulfates and chlorides) on samples of areal fill soil taken from the project areas at depths of 8 to 10½ and 7 to 9½ feet below ground

surface in Borings B-3 and B-5, respectively, are presented on Plate C-5 in Section I, Appendix C. These results should be incorporated into design of project elements (e.g., new structures, pipelines, valves, etc.), noting that portions of the existing sanitary sewer pipeline to be replaced by this project is severely corroded and that Bay Mud is widely known to be highly corrosive to concrete and steel.

4.0 ADDITIONAL SERVICES AND LIMITATIONS

We recommend that DCM/GeoEngineers be given the opportunity to provide the following additional services through the completion of project construction:

- Review of final plans and specifications prior to bid for conformance with geotechnical conditions and recommendations;
- Review of contractor submittals (e.g., shoring, dewatering, ground improvement, etc.) for conformance with geotechnical findings described herein;
- Review and response to contractor requests for information that relate to geotechnical issues; and
- Periodic construction observations during excavations to verify conformance of exposed surface conditions with the findings of this report.

We have prepared this report for the exclusive use of the City of Sausalito, West Yost Associates, and their authorized agents for the Sausalito Priority 1 Sewer Replacement Project in Sausalito, California. Field work for this geotechnical engineering investigation report was planned and completed based on project information provided to us at the time of our subsurface investigation. This geotechnical engineering investigation report was formulated based on findings from our field work and the project information provided to us by the time this report was prepared.

Within the limitations of scope, schedule and budget, our services have been executed in accordance with generally accepted practices in the field of geotechnical engineering in this area at the time this report was prepared. The conclusions, recommendations, and opinions presented

in this report are based on our professional knowledge, judgment and experience. No warranty or other conditions, expressed or implied, should be understood. During the course of our investigation, we reported limited information regarding soil corrosivity and soil and groundwater contamination in the project areas. Studies of, and design recommendations related to soil corrosivity and soil and groundwater contamination in the project areas, and the mitigation thereof, is not part of our scope of services for this geotechnical investigation.

Any electronic form, facsimile or hard copy of the original document (email, text, table and/or figure), if provided, and any attachments should be considered a copy of the original document. The original document is stored by DCM/GeoEngineers, Inc. and will serve as the official document of record.

Please refer to the appendix titled "Report Limitations and Guidelines for Use" (Appendix E) for additional information pertaining to use of this report.

5.0 REFERENCES

ABAG, 2009, FEMA Flood Hazard Areas.

ABAG, 2009, Liquefaction Susceptibility Map for the San Francisco Bay Area.

Bay Area Geotechnical Group (BAGG), March 1999, Soil Investigation and Consultation, Flood Protection Improvements for Clipper Yacht Harbor.

Blake, M.C., Jr., and others, 2000, Geologic Map of Parts of Marin, San Francisco, Alameda, Contra Costa, and Sonoma Counties, California: U.S. Geological Survey Miscellaneous Field Studies Map 2337.

Bolt, B.A., 1993, Earthquakes: W.H. Freeman and Company, New York.

Bryant, W.A., and Hart, E.W., 2007, Fault-Rupture Hazard Zones in California: California Geological Survey Special Publication 42, Interim Revision 2007.

California Division of Mines and Geology (CDMG), 1998, Maps of Known Active Fault Near-Source Zones in California and Adjacent Portions of Nevada, to be used with the 1997 Uniform Building Code: International Conference of Building Officials.

Cao, T., and others, 2003, The Revised 2002 California Probabilistic Seismic Hazard Maps; California Geological Survey, an update to DMG Open-File Report 96-08.

DCM/GeoEngineers, May 2009, Draft Geotechnical Engineering Siting Study, Sausalito-Marin City Sanitary District, New Wet Weather Storage Tank Project, Sausalito and Marin County, California.

Geoengineering, 1995, Geotechnical Evaluation, Proposed Waterfront Addition, Spinnaker Restaurant, 100 Spinnaker Drive, Sausalito, California.

Goldman, H.B., ed., 1969, Geologic and Engineering Aspects of San Francisco Bay Fill; California Division of Mines and Geology Special Report 97.

Harding Lawson & Associates, 1981, Soil Investigation, Federal Ornamental Building, 475 Gate 5 Road, Sausalito, California.

Harding Lawson & Associates, 1977, Preliminary Report, Soil Engineering Investigation, Planned Light Manufacturing and Commercial Building, 200 Gate Five Road, Sausalito, California.

Kashiwagi, J.H., and others, 1985, Soil Survey of Marin County, California.

Kleinfelder, 2003, Geotechnical Investigation Arques Shipyard and Marina Project, 2530 Marinshp Way, Sausalito, California.

Knudsen, K.L., and others, 2000, Description and Mapping of Quaternary Deposits and Liquefaction Susceptibility, Nine-County San Francisco Bay Region, California, U.S. Geological Survey Open-File Report 00-444.

Lacey and Gould, 1985, Settlement from pile driving in sands: ASCE Special Technical Publication, Vibration Problems in Geotechnical Engineering.

Moser, A.P., 1990, Buried Pipe Design, 2nd Edition, McGraw Hill: New York, NY.

Rice, S.J., and others, 1976, Geology of the Tiburon, Peninsula, Sausalito, and Adjacent Areas, Marin County, California: U.S. Geological Survey Open-File Map 71-216.

Suprenant, B.A., and Basham, K.D., 1993, Excavation Safety, Understanding and Complying with OSHA Standards, The Aberdeen Group, Addison, Illinois.

Towill, August 2009, Terrain Elevation Difference Analysis, 1968 to 2007, for City of Sausalito, California.

William Lettis & Associates (WLA), September 2008, Final Technical Report, Detailed Mapping of Artificial Fills, San Francisco Bay Area, California: U.S. Geological Survey's National Earthquake Hazards Reduction Program Award No. 07HQGR00789.

Witter, R.D. and others, 2006, Maps of Quaternary Deposits and Liquefaction Susceptibility in the Central San Francisco Bay Region, California; U.S. Geological Survey Open-File Report 2006-1037.

Woodward-Clyde Consultants, 1984, Clipper Yacht Harbor, Sausalito, California (as cited in BAGG, 1999).

Woodward-Clyde-Sherard & Associates, 1959, Clipper Yacht Company Development, Sausalito, California (as cited in BAGG, 1999).

Working Group on California Earthquake Probabilities (WGCEP) 2003 and 2007, Earthquake Probabilities in the San Francisco Bay Region: 2002-2031 U.S. Geological Survey Open-File Reports 03-214 and 2007-1437.

Youd, T.L., and Hoose, S.N., 1978, Historic Ground Failures in Northern California Triggered by Earthquakes: U.S. Geological Survey Professional Paper 993.

ULTIMATE AMOUNT OF SETTLEMENT OF FILLS ACCORDING TO THICKNESS OF FILL AND THICKNESS OF UNDERLYING BAY MUD.

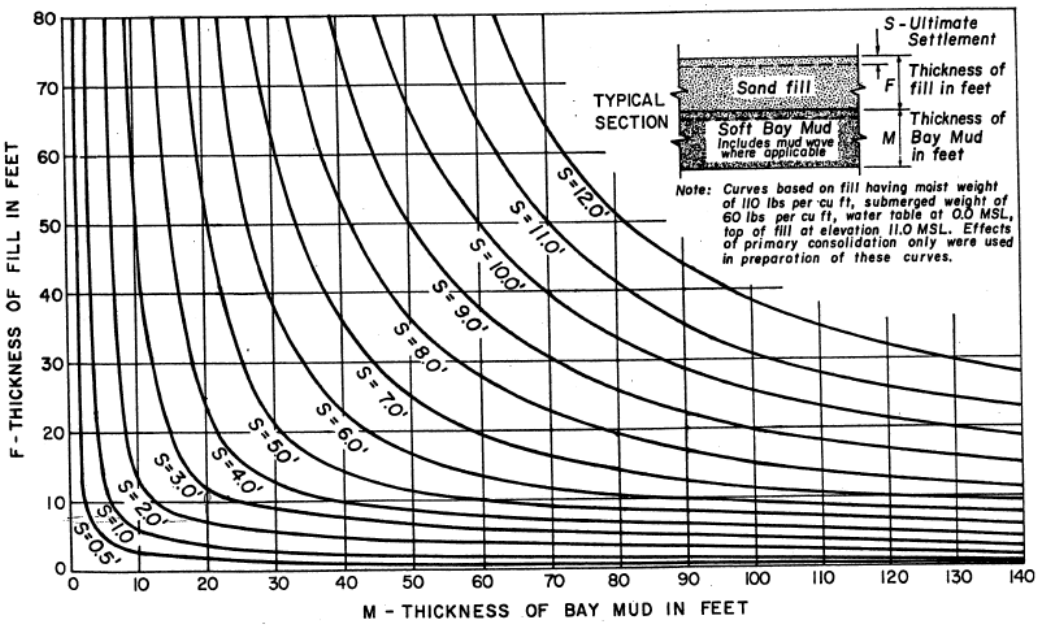

Modified from CDMG (1969)

PERCENT SETTLEMENT OF FILLS OVER TIME ACCORDING TO THICKNESS OF MUD.

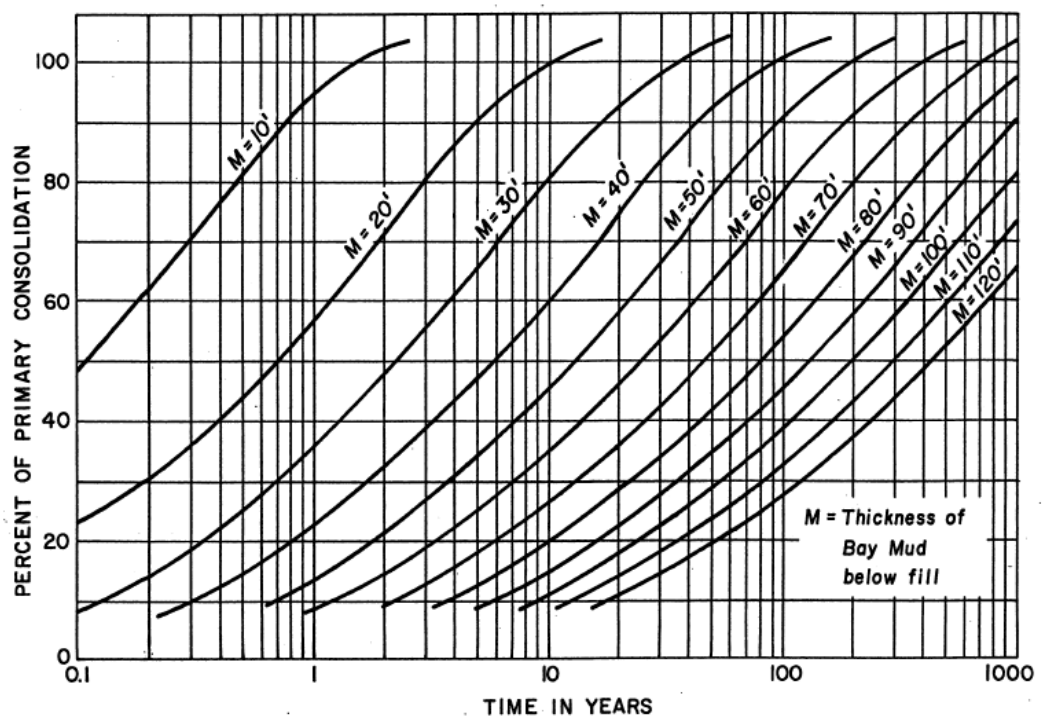

Modified from CDMG (1969)

DCM | GEOENGINEERS

FILE NO. 18337-001-00 | AUGUST 2009

WEST YOST ASSOCIATES
City of Sausalito
Priority 1 Sewer Replacement
Sausalito, California
BAY MUD SETTLEMENT AND TIME RATE

PLATE NO.
II-1

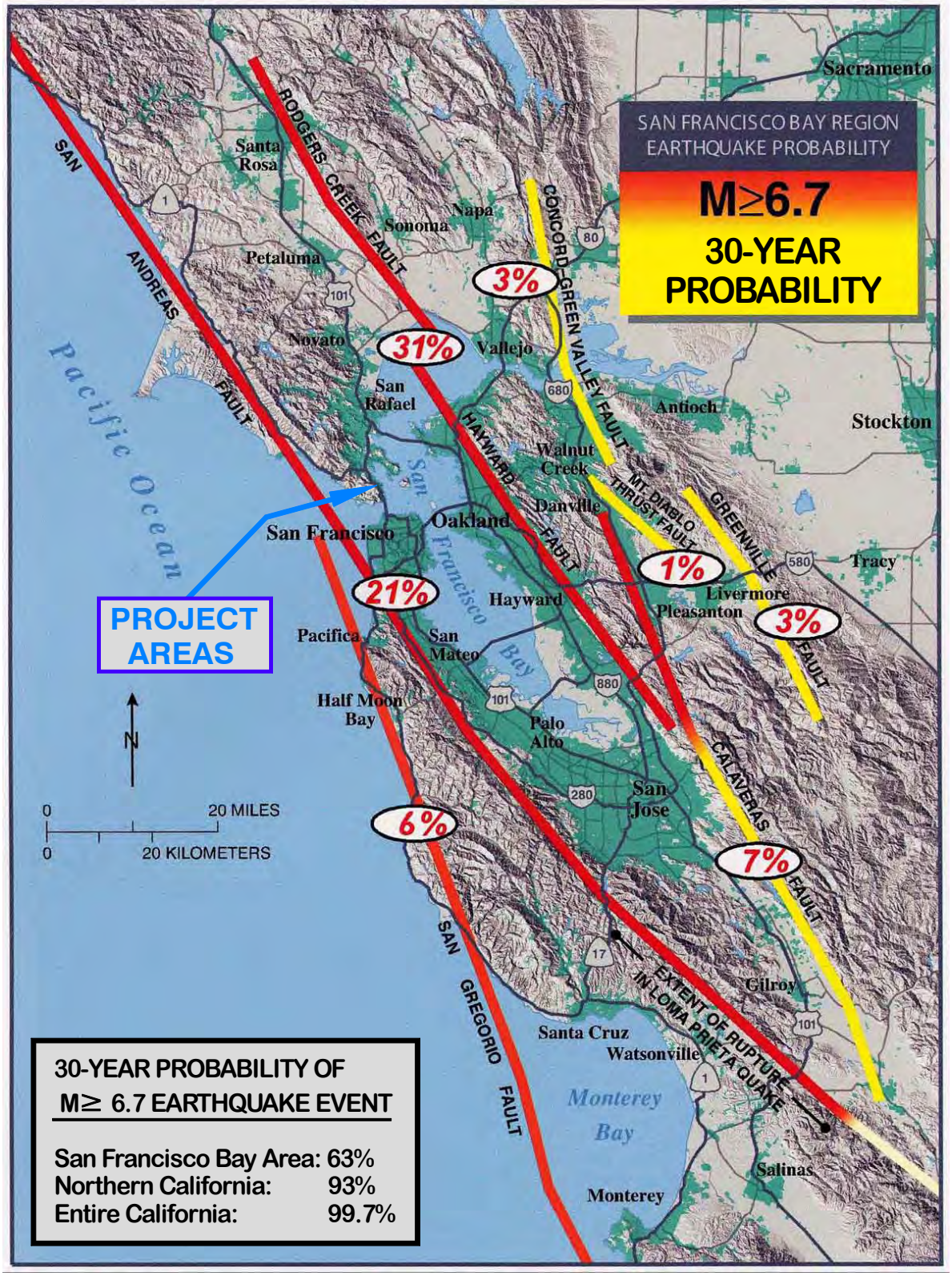

Modified from WGCEP (2003 and 2007)

DCM | GEOENGINEERS

FILE NO. 18337-001-00 | AUGUST 2009

WEST YOST ASSOCIATES
City of Sausalito
Priority 1 Sewer Replaceement
Sausalito, California

BAY AREA FAULT MAP

PLATE NO.

II-2

(COLOR PLATE)

Peak Ground Acceleration Shaking with 10% probability exceedance in 50 years (firm rock condition)

- <10% g
- 10-20%g
- 20-30%g
- 30-40%g
- 40-50%g
- 50-60%g
- 60-70%g
- 70-80%g
- >80%g

("g" is gravity)

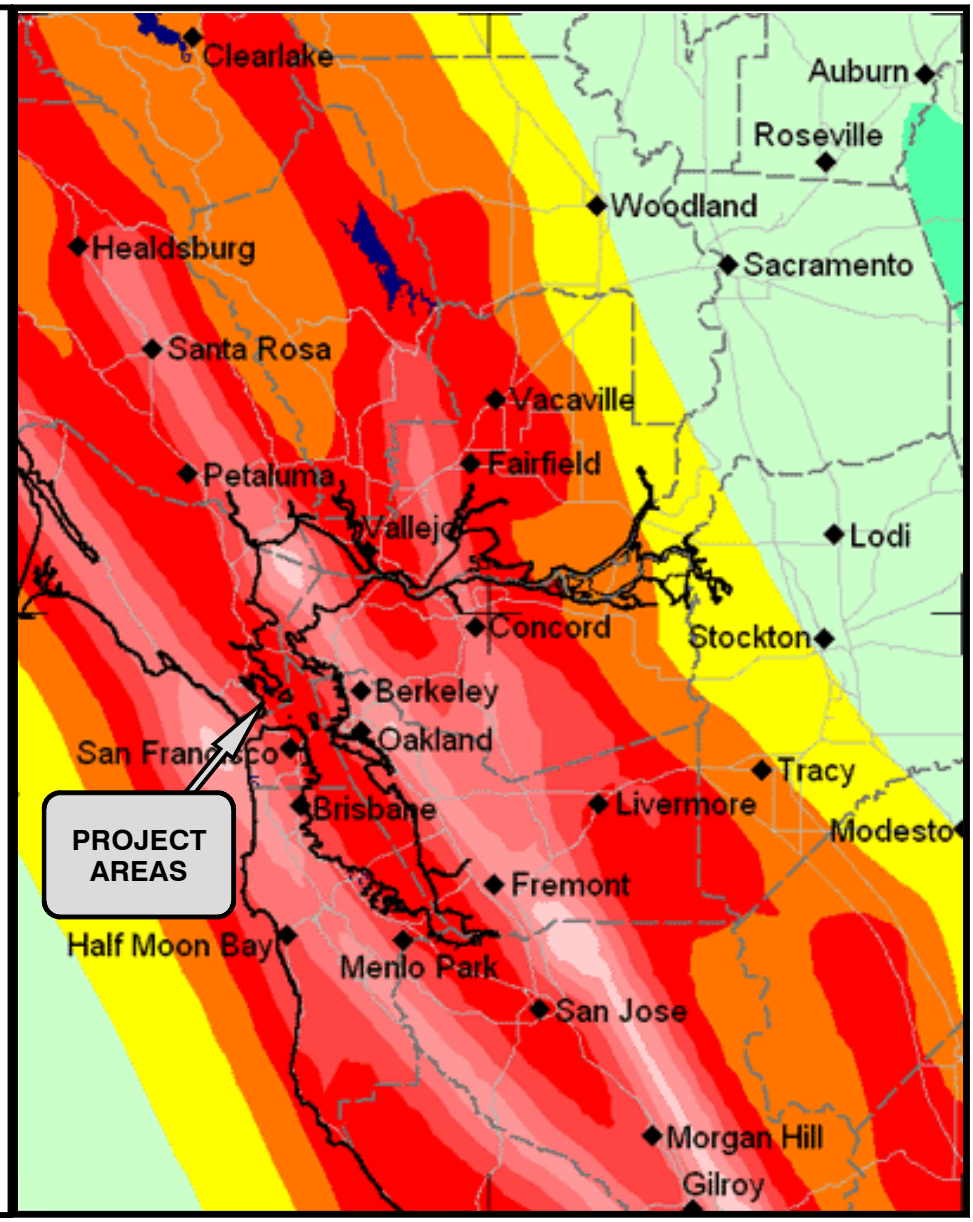

Modified from USGS/CGS 2002 Probabilistic Seismic Hazards Assessment Model (Cao and others 2003).

Latitude/Longitude:	**N37.8685°/W122.4985°**
Peak Ground Acceleration:	**0.5g**

DCM | GEOENGINEERS

FILE NO. 18337-001-00 | AUGUST 2009

WEST YOST ASSOCIATES
City of Sausalito
Priority 1 Sewer Replaceement
Sausalito, California

SEISMIC SHAKING MAP

PLATE NO.

II-3

(COLOR PLATE)

AVERAGE PEAK VELOCITY (CENTIMETERS PER SECOND)	MODIFIED MERCALLI INTENSITY VALUE AND DESCRIPTION	AVERAGE PEAK ACCELERATION ("g" is gravity - 9.80 metres per second squared)
	I. Not felt except by a very few under especially favorable circumstances.	
	II. Felt only by a few persons at rest, especially on upper floors of buildings. Delicately suspended objects may swing.	
	III. Felt quite noticeable indoors, especially on upper floors of buildings, but many people do not recognize it as an earthquake. Standing vehicles may rock slightly. Vibration like passing of a truck. Duration estimated.	
1-2	IV. During the day felt indoors by many, outdoors by few. At night some awakened. Rattling of dishes, windows, and doors; walls make creaking sounds. Hanging objects swing. Sensation like a heavy truck passing. Standing vehicles rocked noticeably.	0.015g-.02g
2-5	V. Felt by nearly everyone, many awakened. Some dishes, windows and so on broken; cracked plaster in a few places; unstable objects overturned. Disturbances of trees, poles and other tall objects sometimes noticeable. Pendulum clocks may stop. Buildings trembled throughout.	0.03g-0.04g
5-8	VI. Felt by all, many frightened and run outdoors. Some moderately heavy furniture moved; a few instances of fallen plaster and damaged chimneys. Trees, bushes, shaken slightly to moderately. Damage slight in poorly constructed buildings. Broken dishes, glassware and some windows. Moved furnishings and overturned furniture.	0.06g-0.07g
8-12	VII. Everybody runs outdoors. Damage negligible in buildings of good design and construction; slight to moderate in well-built ordinary structures; considerable in poorly built or badly designed structures; chimneys cracked to considerable extent. Noticed by persons driving vehicles. Waves on ponds, lakes, running water. Broke numerous windows, heavy furniture overturned. Dislodged bricks and stones.	0.10g-0.15g
20-30	VIII. Damage slight in specially designed structures; considerable in ordinary substantial buildings with partial collapse; great in poorly built structures. Panel walls thrown out of frame structures. Fall of chimneys, factory stacks, columns, monuments, walls. Heavy furniture overturned. Sand and mud ejected in small amounts. Changes in well water. Persons driving vehicles disturbed.	0.25g-0.30g
45-55	IX. Damage considerable in specially designed structures; well-designed frame structures thrown out-of-plumb; great in substantial buildings, with partial collapse. Buildings shifted off foundations. Ground cracked conspicuously. Underground pipes broken. Reservoirs threatened.	0.50g-0.55g
More than 60	X. Some well-built wooden structures destroyed; most masonry and frame structures destroyed with foundations; ground badly cracked. Railroad rails bent. Landslides considerable from river banks and steep slopes. Shifted sand and mud. Water splashed, slopped over banks. Reservoirs greatly damaged. Open cracks in cement pavements and asphalt road surfaces.	More than 0.60g
	XI. Few, if any, (masonry) structures remain standing. Bridges destroyed. Broad fissures in ground. Underground pipelines completely out of service. Earth slumps and land slips in soft ground. Rails bent greatly. Dams, dikes, embankments severly damaged. Destroyed large well-built bridges.	
	XII. Damage total. Practically all works of construction damaged greatly or destroyed. Landslides, falls of rock, slumping of river banks extensive. Fault slips in firm rock, with notable horizontal vertical off-set displacements. Water channels, surface and underground disturbed and modified greatly. Waves seen on ground surfaces.	

REFERENCE ; Compiled from "Earthquakes & Volcanoes," Volume 21, Number 1, 1989, and "Earthquakes A Primer," Bruce A. Bolt, W.H. Freeman and Company, San Francisco, Copyright 1993.

DCM GEOENGINEERS

WEST YOST ASSOCIATES

City of Sausalito
Priority 1 Sewer Replaceement
Sausalito, California

PLATE NO.

II-4

FILE NO. 18337-001-00 | AUGUST 2009

MODIFIED MERCALLI SCALE

GRAIN SIZE SCALE

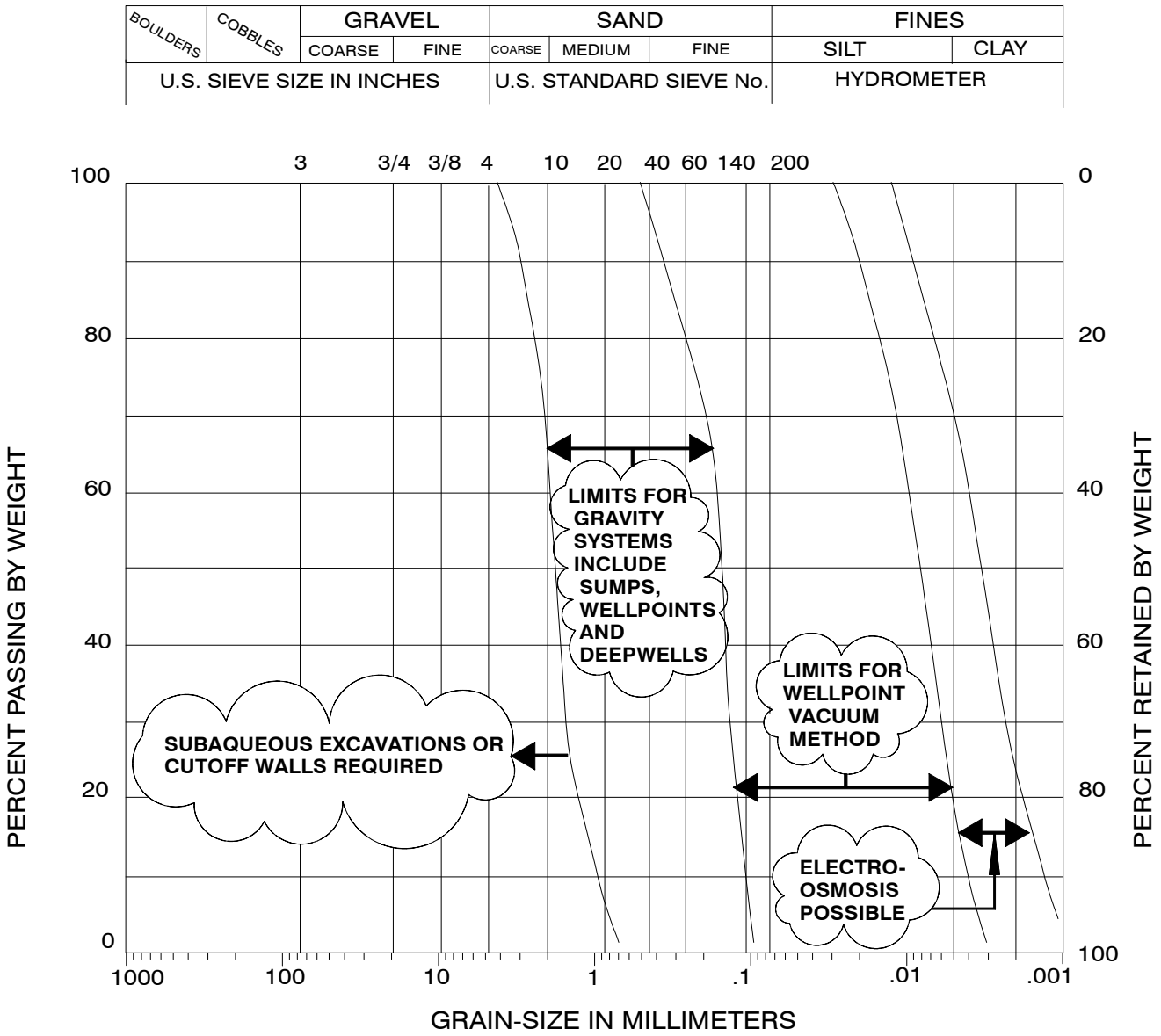

From: Naval Facilities Engineering Command, 1986, Design Manual 7.02 Foundations and Earth Structures, Fiqure 14.

DCM GEOENGINEERS

FILE NO. 18337-001-00 | AUGUST 2009

WEST YOST ASSOCIATES
City of Sausalito
Priority 1 Sewer Replaceement
Sausalito, California

DEWATERING LIMITATIONS VS. GRAIN SIZE

PLATE NO.
II-5

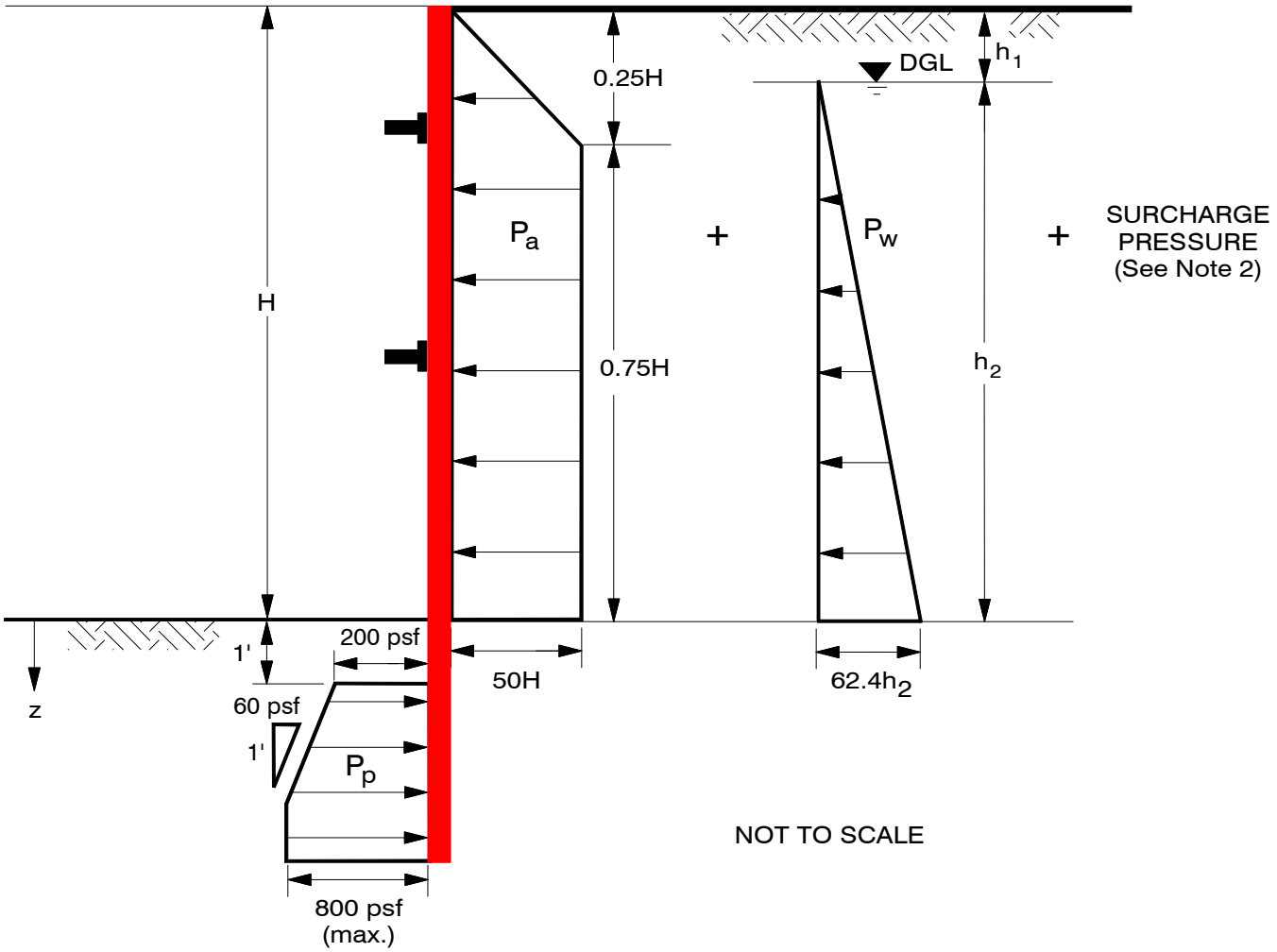

LEGEND:

H = Total Excavation Height

h_1 = Height of shoring above design groundwater level (DGL)

h_2 = Height of shoring below design groundwater level (DGL)

z = depth below bottom of excavation

DGL = Design Groundwater Level (for Shoring Design)

P_a = Active Braced Earth Pressure (psf): equals 50H

P_p = Passive Earth Pressure (psf): equals 200 psf + 60 psf/ft of depth to a maximum of 800 psf

P_w = Hydrostatic Pressure (psf): equals $62.4h_2$

NOTES:

1. Passive earth pressures are ultimate values and an appropriate factor of safety of at least 2 should be used in calculation of embedment depth.
2. This preliminary pressure diagram has been constructed without consideration for surcharge loads such as stockpiled soil, traffic, structural loads, etc. Surcharge loads must be added to this pressure diagram where applicable. Minimum shoring pressures for traffic and equipment surcharge are provided on Plate II-8.

DCM GEOENGINEERS	WEST YOST ASSOCIATES City of Sausalito Priority 1 Sewer Replaceement Sausalito, California	PLATE NO. II-6
FILE NO. 18337-001-00 AUGUST 2009	PRELIMINARY EARTH PRESSURE DIAGRAM FOR BRACED SHORING	

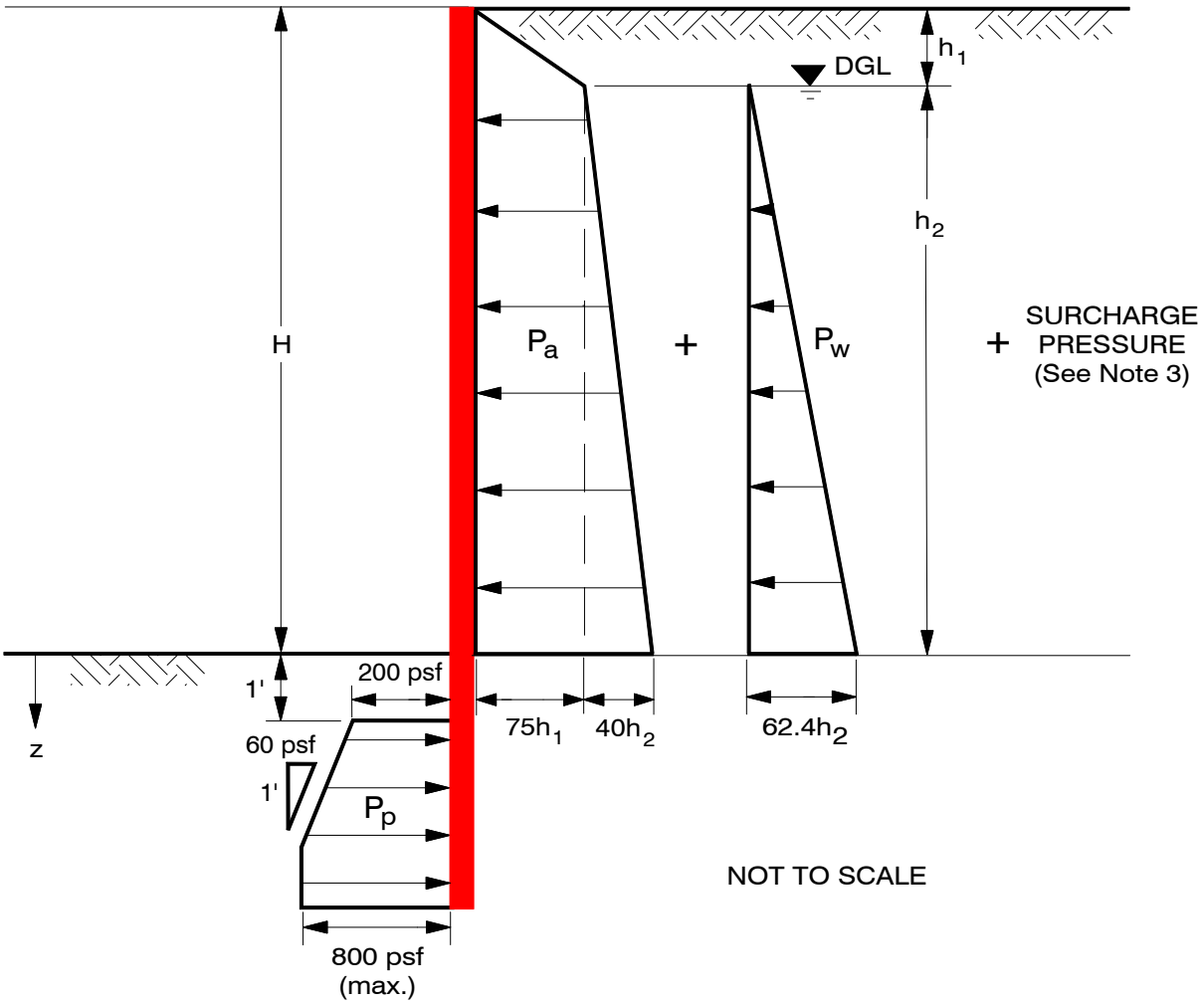

LEGEND:

H = Total Excavation Height

h_1 = Height of shoring above design groundwater level (DGL)

h_2 = Height of shoring below design groundwater level (DGL)

z = depth below bottom of excavation

DGL = Design Groundwater Level (for Shoring Design)

P_a = Active Earth Pressure (psf): equals $75h_1$ above DGL, $75h_1 + 40h_2$ below DGL

P_p = Passive Earth Pressure (psf): equals 200 psf + 60 psf/ft of depth to a maximum of 800 psf

P_w = Hydrostatic Pressure (psf): equals $62.4h_2$

NOTES:

1. Passive earth pressures are ultimate values and an appropriate factor of safety of at least 2 should be used in the calculation of embedment depth.
2. Deflection of cantilevered shoring should be calculated on a case by case basis and limited as necessary to avoid damage to existing structures and utilities.
3. This preliminary pressure diagram has been constructed without consideration for surcharge loads such as stockpiled soil, traffic, structural loads, etc. Surcharge loads must be added to this pressure diagram where applicable. Minimum shoring pressures for traffic and equipment surcharge are provided on Plate II-8.

DCM GeoEngineers	WEST YOST ASSOCIATES City of Sausalito Priority 1 Sewer Replaceement Sausalito, California PRELIMINARY EARTH PRESSURE DIAGRAM FOR CANTILEVER SHORING	PLATE NO. II-7	
FILE NO. 18337-001-00	AUGUST 2009		

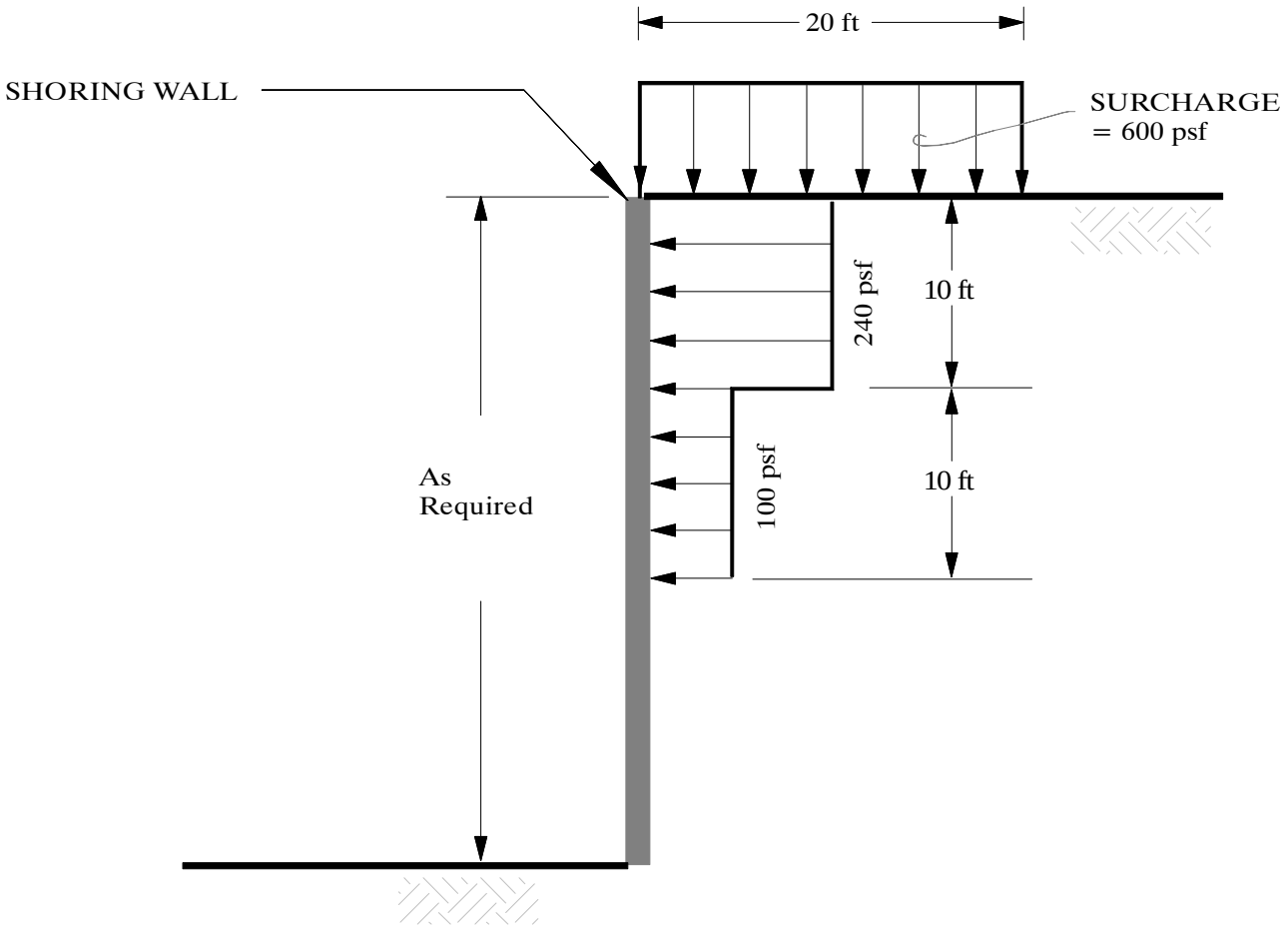

Notes:

These are minimum shoring pressures to be used for traffic and equipment surcharges. Shoring pressures from existing structures, construction activities or equipment that produce larger or different surcharge loading patterns than that shown should be determined by the shoring designer using geotechnical computational methods.

DCM | GeoEngineers

FILE NO. 18337-001-00 | AUGUST 2009

WEST YOST ASSOCIATES
City of Sausalito
Priority 1 Sewer Replaceement
Sausalito, California

MINIMUM SHORING PRESSURES FOR TRAFFIC AND EQUIPMENT SURCHARGE

PLATE NO.

II-8

TRENCH BACKFILL

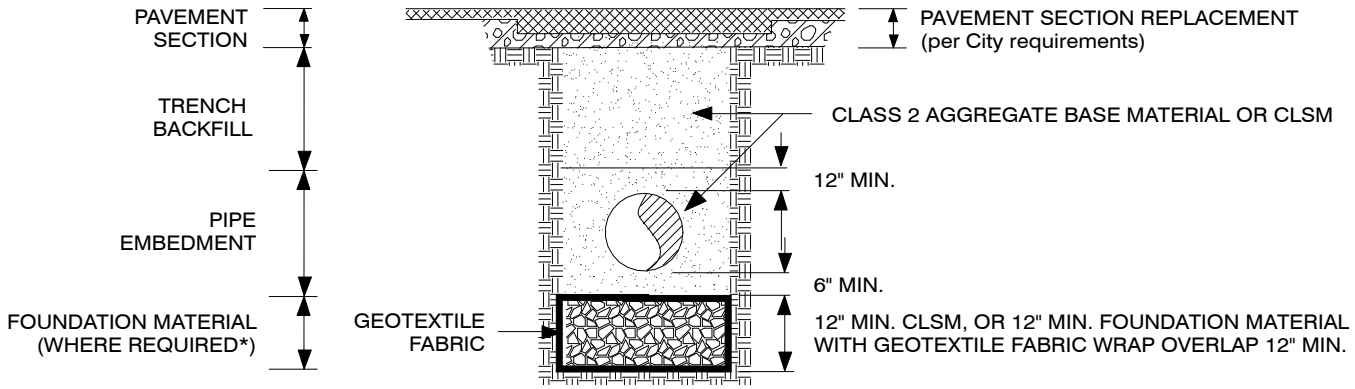

*Foundation Material should be required where trench bottoms are unstable (e.g., pumping subgrade under foot load, groundwater seepage, boiling, etc.)

NOTES:

1. Not to scale.
2. See report text for related material recommendations and compaction requirements.

DCM GEOENGINEERS

FILE NO. 18337-001-00 | AUGUST 2009

WEST YOST ASSOCIATES

City of Sausalito
Priority 1 Sewer Replaceement
Sausalito, California

TRENCH BACKFILL DETAILS

PLATE NO.

II-9

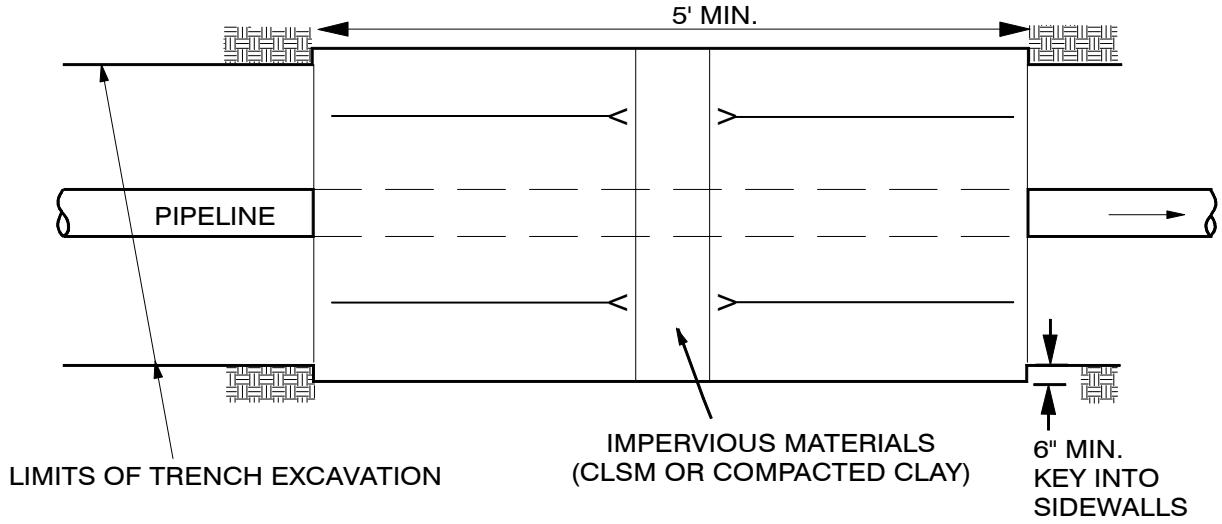

PLAN VIEW

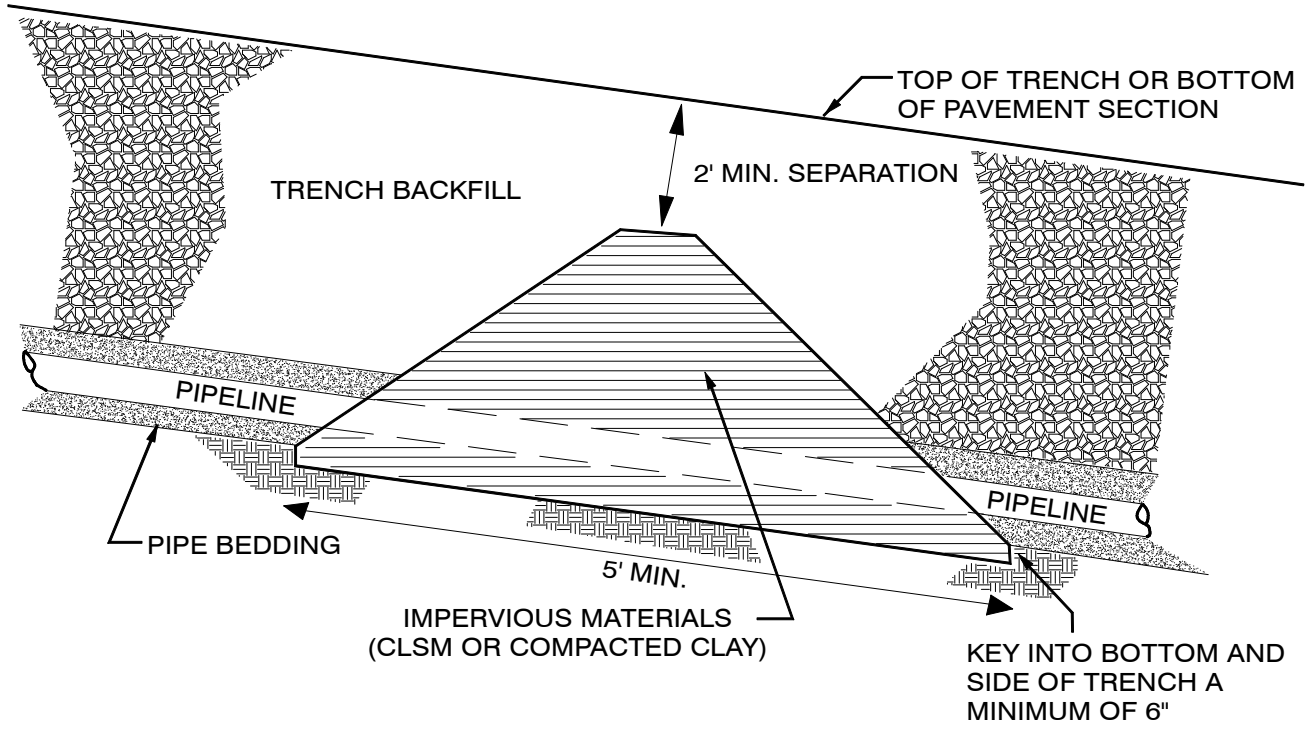

NOTE:

1. See text of report for material descriptions and for compaction requirements.
2. Trench dams to be constructed as shown on the plans a minimum of 3 feet from any pipe joint.

SECTION VIEW

DCM | GEOENGINEERS

FILE NO. 18337-001-00 | AUGUST 2009

WEST YOST ASSOCIATES

City of Sausalito
Priority 1 Sewer Replacement
Sausalito, California

TRENCH DAM

PLATE NO.

II-10

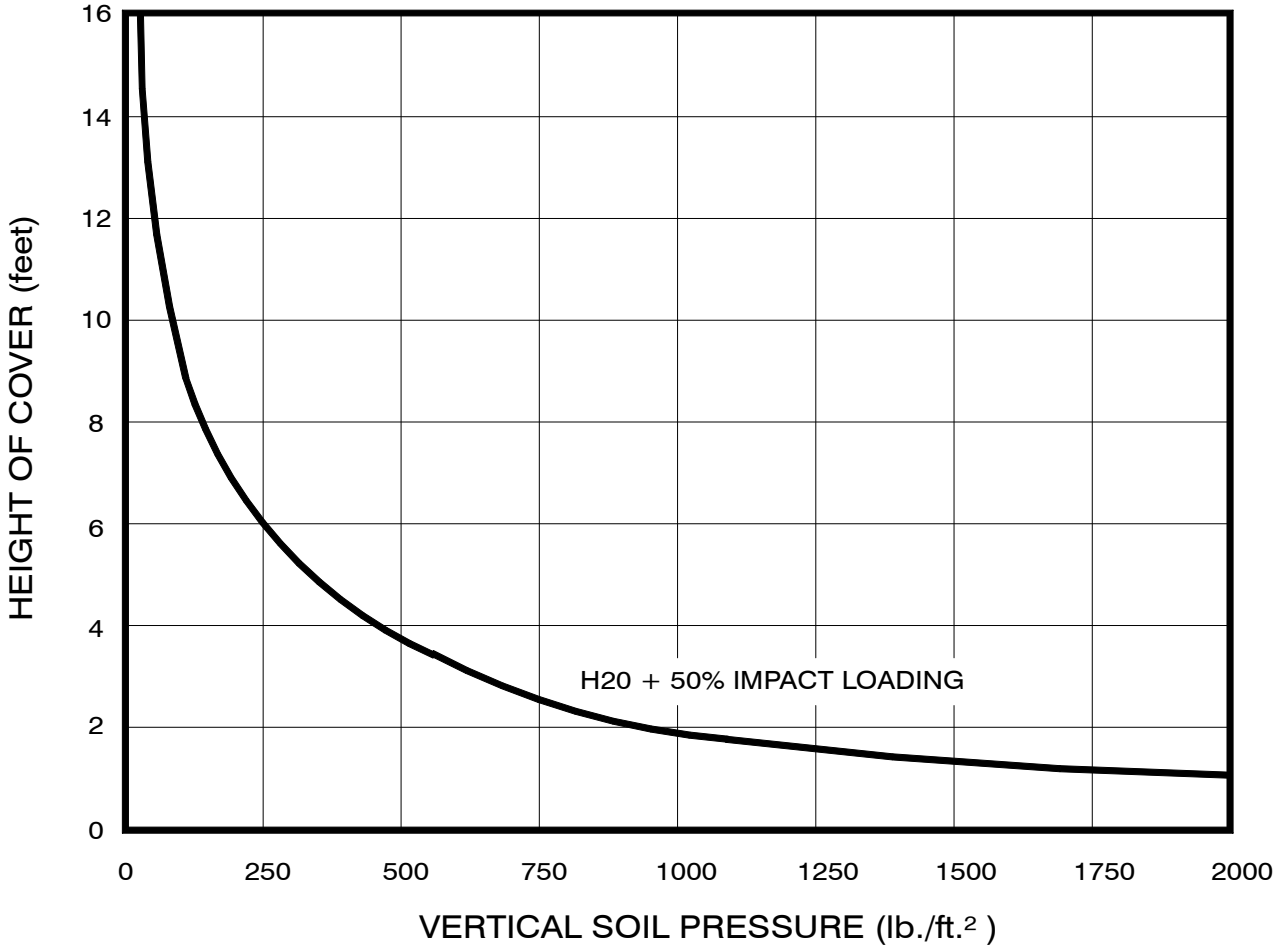

NOTE: Apply vertical soil pressure to diameter of pipeline (horizontal projection) to calculate vertical pipe load (Moser, 2001).

DCM | GEOENGINEERS

FILE NO. 18337-001-00 | AUGUST 2009

WEST YOST ASSOCIATES
City of Sausalito
Priority 1 Sewer Replaceement
Sausalito, California

VERTICAL SOIL PRESSURE DUE TO LIVE LOADS

PLATE NO.

II-11

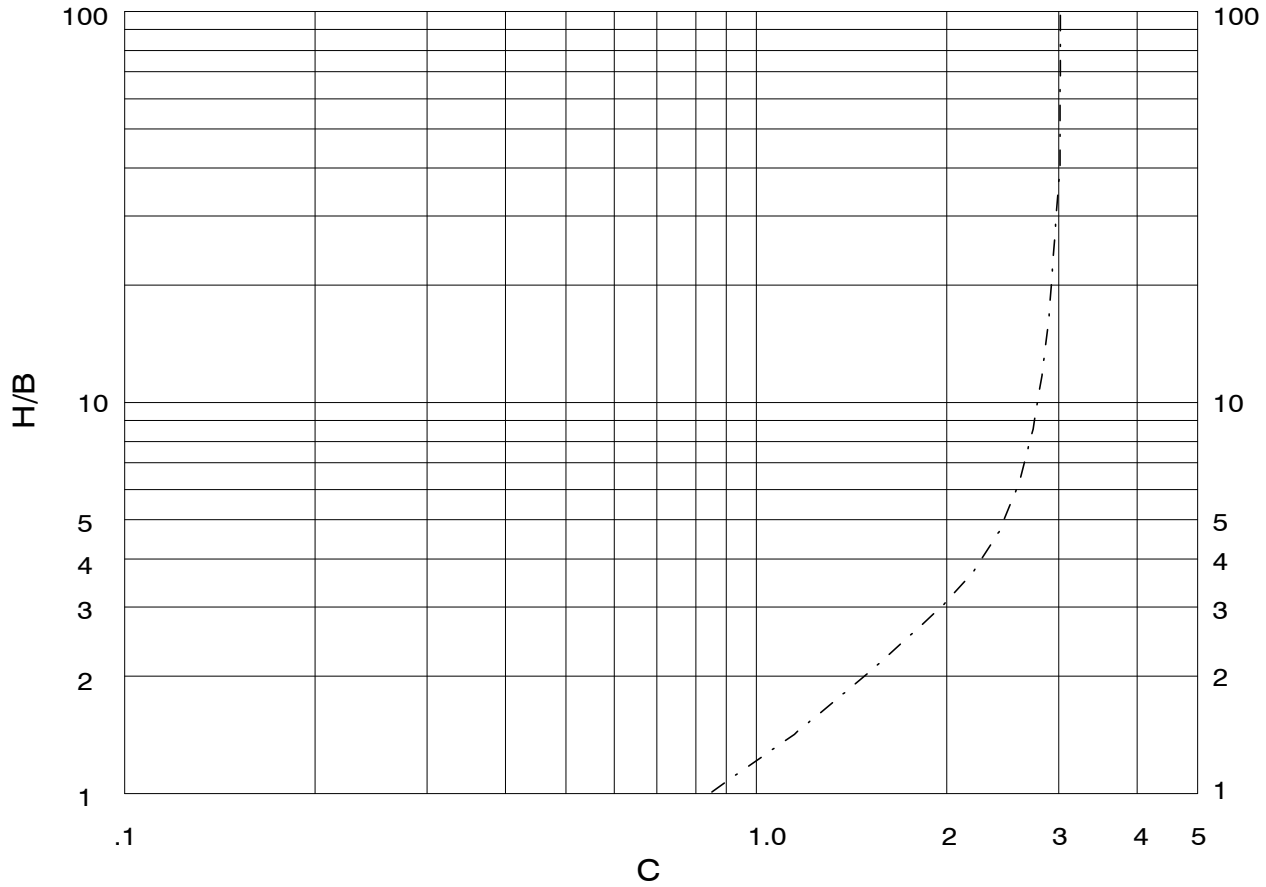

LEGEND:

— · — · — · — = Compacted Granular Backfill (Class 2AB)

$$W = C \gamma B^2$$

where:

W = Vertical soil load on rigid pipe due to overburden (pounds/foot)

γ = Unit weight of overlying materials (pounds/cubic foot)

H = Height/depth of overlying materials (feet)

B = Trench width

C = Load coefficient

NOTE: Marston's load coefficients are used to calculate vertical soil loads on rigid pipes installed by open cut trenching (Moser, 2001).

DCM | GEOENGINEERS

FILE NO. 18337-001-00 | AUGUST 2009

WEST YOST ASSOCIATES
City of Sausalito
Priority 1 Sewer Replaceement
Sausalito, California

MARSTON'S LOAD COEFFICIENTS
TRENCH CONDITIONS

PLATE NO.
II-12

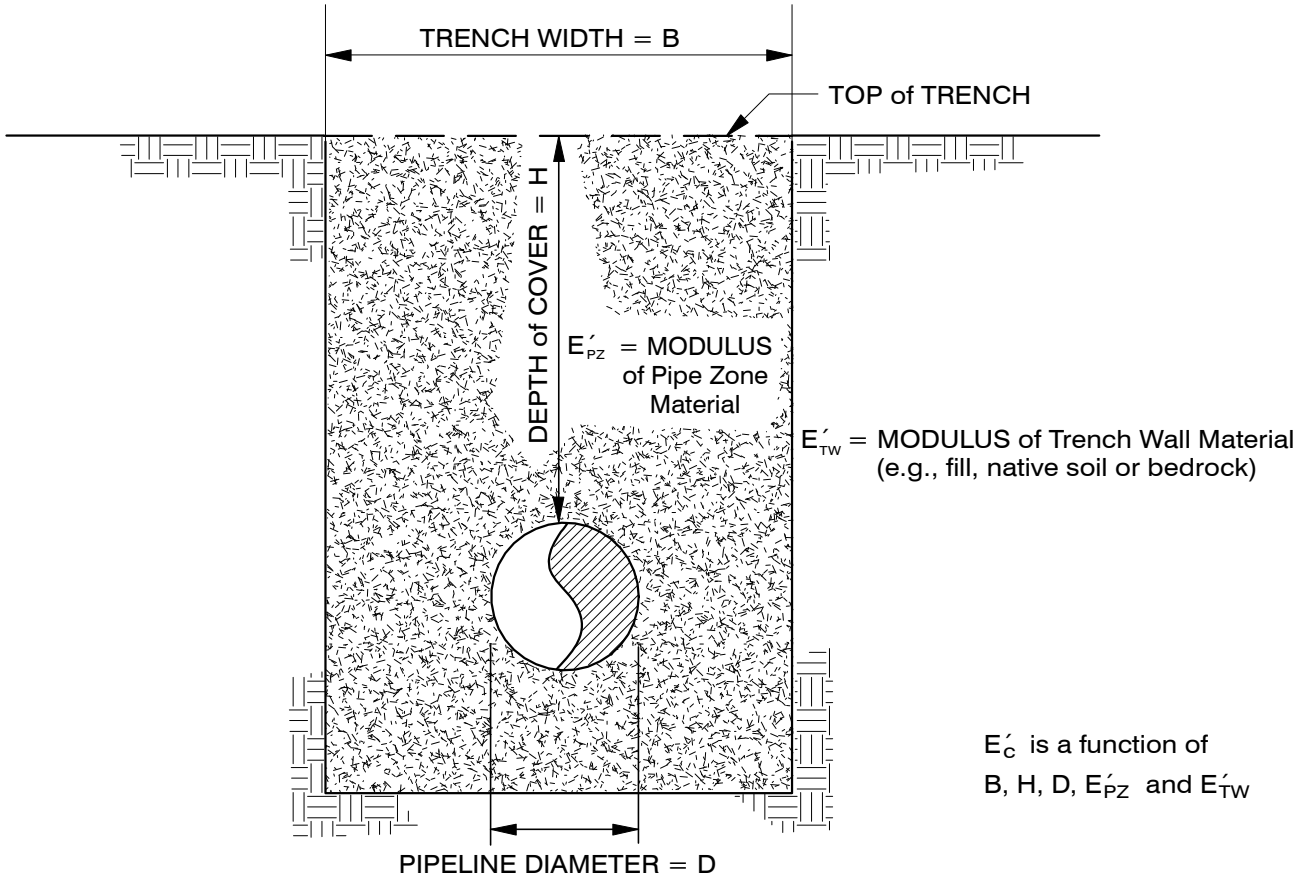

E'_C is a function of B, H, D, E'_{PZ} and E'_{TW}

$\frac{E'_{TW}}{E'_{PZ}}$	S_C for various B:D ratios					
	1.5	2.0	2.5	3.0	4.0	5.0
0.1	0.15	0.30	0.60	0.80	0.90	1.00
0.2	0.30	0.45	0.70	0.85	0.92	1.00
0.4	0.50	0.60	0.80	0.90	0.95	1.00
0.6	0.70	0.80	0.90	0.95	1.00	1.00
0.8	0.85	0.90	0.95	0.98	1.00	1.00
1.0	1.00	1.00	1.00	1.00	1.00	1.00
1.5	1.30	1.15	1.10	1.05	1.00	1.00
2.0	1.50	1.30	1.15	1.10	1.05	1.00
3.0	1.75	1.45	1.30	1.20	1.08	1.00
>=5.0	2.00	1.60	1.40	1.25	1.10	1.00

Modified from Jeyapalan (2001)

$$E'_C = S_C E'_{PZ}$$

DCM GEOENGINEERS

FILE NO. 18337-001-00 | AUGUST 2009

WEST YOST ASSOCIATES
City of Sausalito
Priority 1 Sewer Replaceement
Sausalito, California
COMPOSITE MODULUS OF SOIL REACTION - E'c

PLATE NO.
II-13

STRUCTURE WITHOUT EXTERIOR PERIMETER LIP

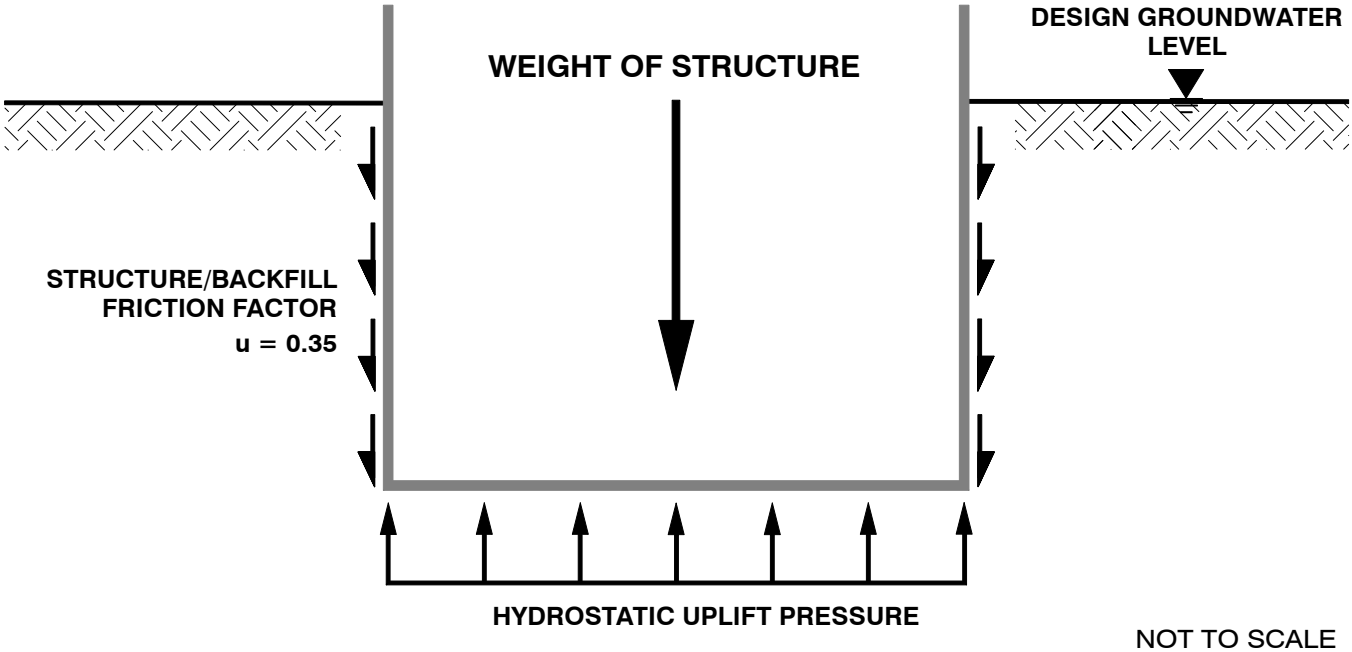

NOT TO SCALE

STRUCTURE WITH EXTERIOR PERIMETER LIP

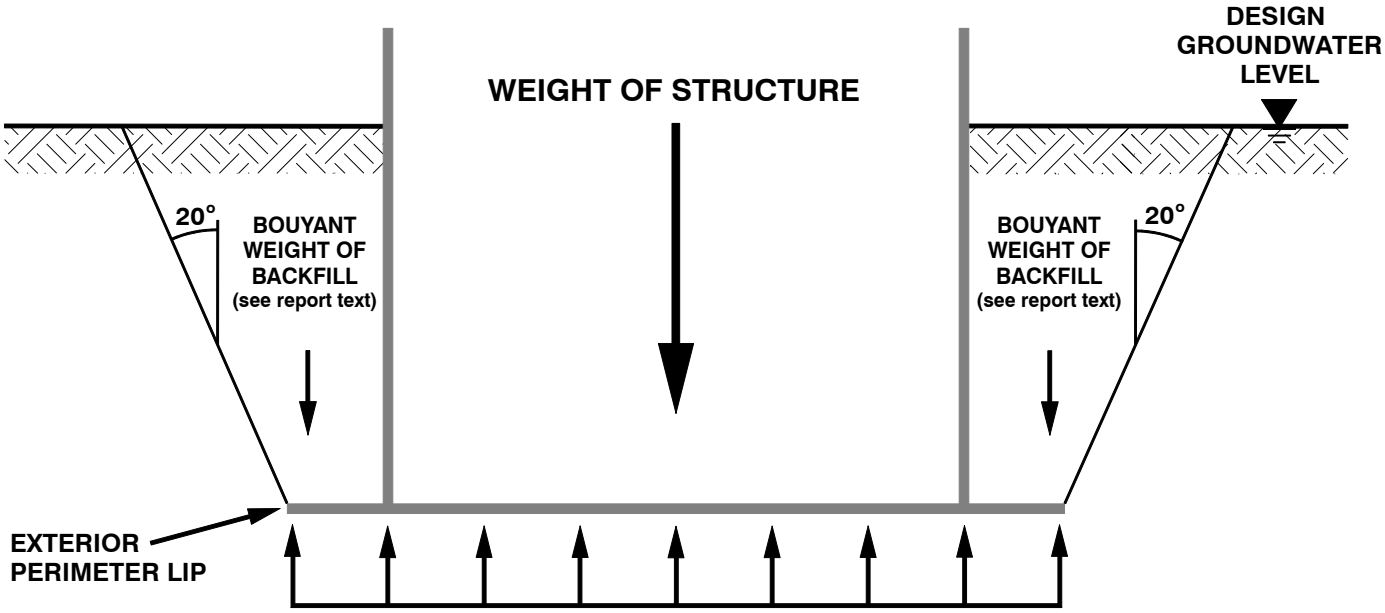

NOT TO SCALE

DCM GEOENGINEERS

FILE NO. 18337-001-00 | AUGUST 2009

WEST YOST ASSOCIATES
City of Sausalito
Priority 1 Sewer Replaceement
Sausalito, California

UPLIFT RESISTANCE

PLATE NO.
II-14

APPENDIX E

DCM | GeoEngineers

APPENDIX E
REPORT LIMITATIONS AND GUIDELINES FOR USE[1]

This appendix provides information to help you manage your risks with respect to the use of this report.

GEOTECHNICAL SERVICES ARE PERFORMED FOR SPECIFIC PURPOSES, PERSONS AND PROJECTS

This report has been prepared for the exclusive use of West Yost Associates and City of Sausalito and their authorized agents. This report is not intended for use by others, and the information contained herein is not applicable to other sites.

GeoEngineers structures our services to meet the specific needs of our clients. For example, a geotechnical or geologic study conducted for a civil engineer or architect may not fulfill the needs of a construction contractor or even another civil engineer or architect involved in the same project. Because each geotechnical or geologic study is unique, each geotechnical engineering or geologic report is unique, prepared solely for the specific client and project site. Our report is prepared for the exclusive use of our Client. No other party may rely on the product of our services unless we agree to such reliance in advance and in writing. This is to provide our firm with reasonable protection against open-ended liability claims by third parties with whom there would otherwise be no contractual limits to their actions. Within the limitations of scope, schedule and budget, our services have been executed in accordance with our Agreement with the Client and the generally accepted geotechnical practices in this area at the time this report was prepared. Use of this report is not recommended for any purpose or project except the one originally contemplated.

A GEOTECHNICAL ENGINEERING OR GEOLOGIC REPORT IS BASED ON A UNIQUE SET OF PROJECT-SPECIFIC FACTORS

This report has been prepared for City of Sausalito's Priority 1 Sewer Replacement Project. GeoEngineers considered a number of unique, project-specific factors when establishing the scope of services for this project and report. Unless GeoEngineers specifically indicates otherwise, it is important not to rely on this report if it was:

- not prepared for you,
- not prepared for your project,
- not prepared for the specific site explored, or
- completed before important project changes were made.

For example, changes that can affect the applicability of this report include those that affect:

- the function of the proposed pipelines;
- elevation, configuration, location, orientation or size of the proposed pipelines;
- composition of the design team; or
- project ownership.

If important changes are made after the date of this report, we recommend that GeoEngineers be given the opportunity to review our interpretations and recommendations. Based on that review, we can provide written modifications or confirmation, as appropriate.

[1] Developed based on material provided by ASFE, Professional Firms Practicing in the Geosciences; www.asfe.org.

SUBSURFACE CONDITIONS CAN CHANGE

This geotechnical or geologic report is based on conditions that existed at the time the study was performed. The findings and conclusions of this report may be affected by the passage of time, by man-made events such as construction on or adjacent to the site, or by natural events such as floods, earthquakes, slope instability or groundwater fluctuations. Please contact GeoEngineers before applying a report for its intended purpose so that we can evaluate whether changed conditions affect the continued reliability of the report.

MOST GEOTECHNICAL AND GEOLOGIC FINDINGS ARE PROFESSIONAL OPINIONS

Our interpretations of subsurface conditions are based on field observations from widely spaced sampling locations at the site. Site exploration identifies the specific subsurface conditions only at those points where subsurface tests are conducted or samples are taken. GeoEngineers reviewed field and laboratory data and then applied our professional judgment to render an informed opinion about subsurface conditions throughout the site. Actual subsurface conditions may differ, sometimes significantly, from those indicated in this report. Our report, conclusions and interpretations should not be construed as a warranty of the subsurface conditions.

GEOTECHNICAL ENGINEERING REPORT RECOMMENDATIONS ARE NOT FINAL

The construction recommendations included in this report are preliminary and should not be considered final. GeoEngineers' recommendations can be finalized only by observing actual subsurface conditions revealed during construction. GeoEngineers is unable to assume responsibility for the recommendations in this report without performing construction observation.

We recommend that you allow sufficient monitoring, testing and consultation during construction by GeoEngineers to confirm that the conditions encountered are consistent with those indicated by the explorations, to provide recommendations for design changes if the conditions revealed during the work differ from those anticipated, and to evaluate whether earthwork activities are completed in accordance with our recommendations. Retaining GeoEngineers for construction observation for this project is the most effective method of managing the risks associated with unanticipated conditions.

A GEOTECHNICAL ENGINEERING OR GEOLOGIC REPORT COULD BE SUBJECT TO MISINTERPRETATION

Misinterpretation of this report by members of the design team or by contractors can result in costly problems. GeoEngineers can help reduce the risks of misinterpretation by conferring with appropriate members of the design team after submitting the report, reviewing pertinent elements of the design team's plans and specifications, participating in pre-bid and preconstruction conferences, and providing construction observation. Please contact GeoEngineers if you want us to provide these additional services.

DO NOT REDRAW THE EXPLORATION LOGS

Geotechnical engineers and geologists prepare final boring and testing logs based upon their interpretation of field logs and laboratory data. To prevent errors or omissions, the logs included in a geotechnical engineering or geologic report should never be redrawn for inclusion in architectural or other design drawings. Only photographic or electronic reproduction is acceptable, but separating logs from the report can create a risk of misinterpretation.

GIVE CONTRACTORS A COMPLETE REPORT AND GUIDANCE

To help prevent costly problems associated with unanticipated subsurface conditions, we recommend giving contractors the complete geotechnical engineering or geologic report, but preface it with a clearly written letter of transmittal. In that letter, advise contractors that the report was not prepared for purposes of bid development and that the report's accuracy is limited. In addition, encourage them to confer with GeoEngineers and/or to conduct additional study to obtain the specific types of information they need or prefer.

CONTRACTORS ARE RESPONSIBLE FOR SITE SAFETY ON THEIR OWN CONSTRUCTION PROJECTS

Our geotechnical recommendations are not intended to direct the contractor's procedures, methods, schedule or management of the work site. The contractor is solely responsible for job site safety and for managing construction operations to minimize risks to on-site personnel and adjacent properties.

READ THESE PROVISIONS CLOSELY

It is important to recognize that the geoscience practices (geotechnical engineering, geology and environmental science) are less exact than other engineering and natural science disciplines. Without this understanding, there may be expectations that could lead to disappointments, claims and disputes. GeoEngineers includes these explanatory "limitations" provisions in our reports to help reduce such risks. Please confer with GeoEngineers if you need to know more how these "Report Limitations and Guidelines for Use" apply to your project or site.

BIOLOGICAL POLLUTANTS

GeoEngineers' Scope of Work specifically excludes the investigation, detection, prevention or assessment of the presence of Biological Pollutants. Accordingly, this report does not include any interpretations, recommendations, findings or conclusions regarding the detecting, assessing, preventing or abating of Biological Pollutants, and no conclusions or inferences should be drawn regarding Biological Pollutants as they may relate to this project. The term "Biological Pollutants" includes, but is not limited to, molds, fungi, spores, bacteria and viruses, and/or any of their byproducts.

A Client that desires these specialized services is advised to obtain them from a consultant who offers services in this specialized field.

APPENDIX E

Gate 5 Road Sewer Rehabilitation Pipe Bursting Feasibility TM

DCM Consulting, Inc.

P.O. Box 225, Lafayette, CA 94549, Telephone: 925.322.9590 www.dcmconsults.com

Technical Memorandum

To:	Jill Shankel Carollo Engineers	Date:	January 6, 2016
From:	Dave Mathy DCM Consulting, Inc.	File:	No. 221
Subject:	City of Sausalito Gate 5 Road Sewer Rehabilitation Sausalito, California		

1.0 INTRODUCTION

This Technical Memorandum presents the findings, conclusions and recommendations of a geotechnical and trenchless engineering evaluation of pipe bursting for the City of Sausalito's Gate 5 Road Sewer Rehabilitation project. The project involves the rehabilitation of approximately 2,000 feet of existing gravity sanitary sewer pipelines beneath Gate 5 Road, Coloma Street and Harbor Drive and installation of approximately 300 feet of new sewer in Gate 5 Road. The original pipelines are estimated to be 40 years old (circa 1975) and consist of 6-inch-inside-diameter vitrified clay pipe (VCP). The original 6-inch VCP pipelines have been lined with 1/8-inch thick HDPE pipe liner (best estimated to be sometime in the past 10 years). Present plans are to replace the existing pipelines by pipe bursting, a trenchless rehabilitation method that significantly reduces excavations in City streets when compared to conventional open-cut trenching. Pipe bursting replacement will require the removal of all existing HDPE pipe lining within the original 6-inch VCP pipelines prior to any pipe bursting activities. A small portion of the present project includes open-cut removal and replacement for approximately 195 feet of asbestos-cement (AC) pipeline in Harbor Drive. The new gravity sewer pipelines will be 8-inch-inside-diameter HDPE or fusible PVC (FPVC). The depth of cover on the existing pipelines varies from about 5.5 feet to about 13.5 feet below street grade.

In 2009, DCM/GeoEngineers (a predecessor firm to DCM Consulting, Inc.) completed the following detailed geotechnical engineering investigation for sanitary sewer pipeline replacement that included this same project area:

- Geotechnical Engineering Investigation Report
  City of Sausalito
  Priority 1 Sewer Replacement Project
  Sausalito, California
  Dated: September 8, 2009
  Prepared for: West Yost Associates

The 2009 geotechnical engineering investigation report included findings, conclusions and recommendations for open-cut trenching removal and replacement of the existing sanitary sewers beneath Gate 5 Road, Coloma Street and Harbor Drive. This specific portion of the 2009 report was not

constructed, but rather was deferred until this present pipe bursting project. Refer to the 2009 geotechnical investigation report for recommendations pertinent to open-cut trenching (i.e. for the AC pipeline removal and replacement in Harbor Drive).

The 2009 geotechnical engineering investigation report contains detailed information relative to:

- geologic setting;
- history of project area development (e.g., multiple generations of land reclamation);
- thickness of areal fills;
- times (e.g., past to recent) of placement of areal fills; and
- ongoing Bay Mud consolidation and long-term settlement projections from areal fill placements that will continue to impact the local gravity sanitary sewers.

This Technical Memorandum is specifically for, and limited to, pipe bursting evaluation, refer to the 2009 geotechnical investigation report for a complete description of site conditions and recommendations for open cut trenching. The 2009 geotechnical engineering investigation report included two subsurface test borings on Gate 5 Road, two subsurface test borings on Harbor Drive and eight reference borings along Gate 5 Road and Harbor Drive. The pipe bursting evaluations contained in this Technical Memorandum have used and have relied on the subsurface soil and groundwater conditions described in the 2009 DCM/GeoEngineers geotechnical engineering investigation report. For purposes of reference as used in this technical memorandum, Gate 5 Road is assumed to be oriented north-south.

2.0 ALIGNMENT CONDITIONS - SURFACE

The gravity sewer pipeline alignment is located beneath Gate 5 Road, Coloma Street and Harbor Drive. Photos 1, 2, 3 and 4 are general views of Gate 5 Road, Coloma Street and Harbor Drive, Photos 5 and 6 are views of surface features above and adjacent to the existing sewer pipeline.

Photo 1 – Gate 5 Road, looking north from Coloma Street.

Photo 2 – Coloma Street looking west from Gate 5 Road toward Bridgeway.

Photo 3 – Gate 5 Road looking south toward Harbor Drive from Coloma Street.

Photo 4 – Harbor Drive looking west from Gate 5 Road toward Bridgeway.

Photo 5 – The sewer alignment (see green paint) on the east side of Gate 5 Road north of Harbor is very close to a storm drain drop-inlet structure.

Photo 6 – The sewer alignment on the east side of Gate 5 Road north of Coloma Street is beneath and behind the concrete curb and gutter and very close to a storm drain drop-inlet structure.

The following surface features are notable with respect to pipe bursting:

- The pipeline alignment is within City streets with asphalt pavement. Test borings completed for the 2009 Geotechnical Engineering Investigation Report (B-1 through B-4) encountered 4 to 10 inches of asphalt concrete over 16 to 24 inches of aggregate base rock.

- Portions of the pipeline alignment are in very close proximity to storm drain drop-inlet structures (see Photos 5 and 6).

- A localized segment of the pipeline alignment is beneath and behind the concrete curb and gutter of Gate 5 Road (see Photo 6).

3.0 PIPELINE CONDITIONS

The original 6-inch VCP gravity sewers have been lined with 1/8-inch thick HDPE pipe liner. The HDPE pipe must be removed from the VCP pipe prior to pipe bursting. CCTV inspection of the pipelines completed by the City in 2015 indicates sags in the 6-inch gravity sewer (standing water over the full diameter of the pipeline indicates sagging of at least 6”) with light to heavy grease in the southern portion of the alignment.

4.0 ALIGNMENT CONDITIONS – SUBSURFACE

A short history of the project area development via historic aerial photos and historic topographic maps is included in the 2009 geotechnical engineering investigation report. The project area is on reclaimed land with multiple generations of fill totaling anywhere from 13 to 30 feet thick over soft Bay Mud. Land reclamation and fill placement into Richardson Bay began in the early 1900s. Extensive filling was completed in the 1940s for development of the Marinship Shipyard. Much of the fill material is crushed rock derived from quarries along the west side of Sausalito. Periodic filling continued through the 1960s and up to about 2005 when approximately 4 feet of fill was placed over Gate 5 Road south of Harbor Drive for flood protection. Areal fills placed before the 1960s were typically not engineered (not graded [i.e., not screened for size] and not compacted) and consisted of end dumped placement with little compaction. These older fills are known to contain debris and oversize materials (e.g., rock boulders up to 3 feet in size, etc.). The lack of areal fill compaction is reflected in the low blow counts (N-values) described below. The 2009 geotechnical field investigation included 4 test borings and 8 reference borings along the present project alignment. Boring logs from the 2009 geotechnical engineering investigation report are attached to this technical memorandum in Appendix A for ease of reference. For the legend key to boring logs and the USCS symbols refer to Plates A-1 and A-2 in the 2009 geotechnical engineering investigation report. Boring locations are shown on the project plans. The pipeline invert depth varies from 6 to 14 feet deep and on all boring logs is located within areal fill (i.e., above the Bay Mud). Groundwater as noted on the boring logs is between 1.5 to 6 feet below present paved surface, therefore the pipeline is consistently at or below groundwater. Selected engineering properties of the fill soils along the present project alignment at and above the pipe zone are:

- soil moisture content: range = 7% to 25%; average = 15%

- dry density: range = 97 pcf to 129 pcf; average = 116 pcf

- percent fines of granular fill (passing a No. 200 sieve): range = 4% to 21%; average = 15%

- USCS soil classification: CL, ML, SC, GC, GM, SP

- Standard Penetration Test Blow Count, N-value: range = 2 to 8; average = 5
- average consistency: CL, ML = soft to medium stiff; SC, GC, GM, SP, = loose to very loose
- soil behavior = fast raveling above groundwater and flowing in granular soils and squeezing in cohesive soils below groundwater (see Tunnelman's Ground Classification System descriptors in Figure 4)

The existing sewer trench backfill was explored by one test boring in 2009 (B-3B) and consisted of lean clay with sand (CL) with similar properties as the area-wide fills. That is, the backfill encountered at B-3B is not imported Class 2 aggregate base rock or CLSM. The use of trench spoils for trench backfill is typical for this era of construction.

5.0 PIPE BURSTING FEASIBILITY

Pipe bursting replacement of the existing Gate 5 Road gravity sewer pipeline as described above is feasible but does present the following challenges and risks:

- Prior to pipe bursting, the existing 1/8-inch thick HDPE pipe liner must be removed from the existing clay pipes. Prior to removing the existing HDPE liner, all laterals connected through the HDPE liner must be exposed and disconnected.
- Excavation and shoring for lateral excavations and pipe bursting entry and exit pits will encounter previously disturbed existing trench wall soils with reduced strength, stability and standup time relative to "undisturbed" areal fills. Such previously disturbed soils classify as Cal OSHA Type C soil and exhibit fast raveling behavior above groundwater and squeezing to flowing behavior below groundwater. Dewatering will be required at lateral excavations and pipe bursting entry and exit pits. Given the wide range of areal fill soil types from clays to sands and gravels, the volume of groundwater inflows into excavations will vary widely from minor to copious.
- Existing pipe sags will not be corrected by pipe bursting. Pipe bursting often lessens the magnitude of pipe sags but should not be counted on to remove sags.
- Unidentified, buried manmade obstructions to pipe bursting such as pipeline pipe joint repair clamps and concrete pipe encasement will slow down, if not stop, pipe bursting requiring dig ups.
- Unidentified changes in original pipe materials, and specifically original VCP to plastic, will stop pipe bursting advance requiring dig ups.
- Cavity expansion and ground deformation will manifest as ground heave and may damage overlying asphalt pavement and concrete curbs (see Photo 6) and storm drain catch basins (see Photos 5 and 6) as a function of pipeline depth and separation from concrete curbs and catch basins.

- Pneumatic pipe bursting will impart ground vibrations with peak particle velocities approaching 2 inches/second for a distance of about 8 feet from the bursting head. A peak particle velocity of 2 inches/second and greater is a commonly accepted threshold for potential damage to surface structures.

- Adjacent parallel and overcrossing utilities will require stress relief pits to isolate existing utilities from ground heave and vibrations. This includes the separate storm drain system pipeline(s) which are in very close in proximity to the sanitary sewer pipelines (see Photos 5 and 6).

- Given the long history of the project area as a shipyard, soil and groundwater contamination should be expected. Evaluation of soil and groundwater contamination is beyond the scope of this geotechnical and trenchless evaluation.

6.0 PIPE BURSTING

Pipe bursting is a trenchless method of pipeline replacement that uses an expansion tool to break apart the existing pipeline pushing the pipe fragments into the surrounding soil and displacing (i.e., compressing) the surrounding soils while the replacement pipeline is simultaneously being pulled in place behind it. The pipe bursting expansion tool (bursting head) can be statically pulled or pneumatically actuated.

The existing project pipeline consists of clay pipe which is conducive to pipe bursting replacement. The International Pipe Bursting Association (IPBA) classifies pipe bursting installations into four categories based on the following criteria: depth of the existing pipe, existing and new pipe diameters, and burst length (IPBA, 2012). The IPBA Pipe Bursting Classification System with the first three categories is presented in Table 1. The fourth criteria by IPBA includes new pipe diameters that are greater than three upsizes and is categorized by IPBA as "developmental".

Table 1 - IPBA Pipe Bursting Classification System[1]

Classification	Depth of Pipe	Existing Pipe Diameter	New Pipe Diameter	Burst Length
A - Minimal Difficulty	< 12 feet	2 to 12 inches	size for size	0 to 350 feet
B - Moderate Difficulty	12 to 18 feet	12 to 18 inches	1 upsize[2]	350 to 500 feet
C - Comprehensive Difficulty	> 18 feet	20 to 36 inches	2 to 3 upsizes	500 to 1000 feet

[1]IPBA, 2012.

[2]An upsize is defined as a 2-inch increase in internal pipeline diameter.

For this project, the pipeline being replaced by pipe bursting is generally less than 12 feet deep (with a localized depth of 14 feet), with existing internal diameter of 6 inches and 1 upsize replacement. Although exact burst lengths are not specified (burst length will be determined by the Contractor's

means and methods), pipe bursting run lengths typically extend from manhole to manhole, and existing manhole spacings along the proposed pipe bursting alignment is generally less than 400 feet. All conditions considered will lead to an IPBA pipe bursting classification of "A/B Minimal to Moderate Difficulty".

Additional factors that enter into the IPBA classification are the original trench width and soil type. The original trench width (circa 1975) is not known. The soils surrounding the pipeline and original trench consist of deep areal fills placed over Bay Mud during multiple generations of land reclamation. The fills are mixed non-cohesive granular and cohesive fine-grained soils. The granular soils are typically loose to very loose in place and the cohesive soils are typically soft to medium stiff. Based on the areal fill soil's relative density and consistency as measured by Standard Penetration Test Blow Count, N-values with a range of N = 2 to 8, and an average of N=5, these soils are considered displaceable and will readily allow for the cavity expansion required for one-upsize pipe bursting replacement.

6.1. Review of Condition of Existing Pipe

Before proceeding with pipe bursting, hydraulic analysis should be performed to verify that the slope of the existing pipeline will be sufficient to meet conveyance goals for the replacement pipeline. A thorough video inspection should also be performed (before and after removal of the HDPE liner) to verify the location of laterals and confirm/quantify the presence of defects in the original VCP pipeline. Checking for the locations of laterals should be done with an initial CCTV inspection of the HDPE liner. A second CCTV inspection of the clay pipe, following removal of the HDPE liner, will be required to check for defects in the clay pipe, offset joints, pipe breaks, pipeline sags and past point repairs with different pipe materials. Replacement methods such as pipe bursting cannot alter the line or grade of a sewer line and have very limited ability to correct defects such as pipe sags and offset joints. The effect of these limitations should be carefully evaluated with respect to the long-term performance of the new sewer.

6.2. Review of As-Built Drawings and Maintenance Records

As-built drawings and maintenance records for the proposed pipe bursting alignment should be carefully reviewed for backfill details and past point repairs, which may not be visible from internal video inspection footage. Pipe sections that have been encapsulated in concrete or backfilled with controlled-density fill (i.e. CLSM), replaced with different pipe materials (for example, polyvinyl chloride [PVC], high density polyethylene [HDPE]) or repaired using metal clamps or collars may result in reduced pipe bursting production rates, or refusal of the bursting tools requiring dig ups to remove the tooling and directly observe, document and remove the reason for refusal.

In addition to the above, research should also include confirmation of the existing pipe material(s). In particular, the presence of asbestos-cement pipe (commonly referred to as "transite" pipe) within any portion of the alignment proposed for pipe bursting should be investigated. Asbestos-cement (AC) pipe has been identified in Harbor Drive east of Gate 5 Road – that portion of pipeline is to be removed and replaced by open-cut trenching. Bursting of asbestos-cement pipe triggers U.S. Environmental Protection Agency (EPA) regulations, which can have a significant negative impact on the future operation and maintenance of the sewer and any nearby excavations in the City streets (that is, the sewer alignment is classified and regulated by the EPA as an asbestos waste disposal site).

6.3. Pipe Bursting Equipment

The Contractor's choice of bursting method (for example, static or pneumatic) and equipment should be compatible with the project requirements and subsurface conditions as described herein. Of particular importance is the ability of the equipment to complete the Contractor proposed burst lengths given the size-for-size and one-upsize replacement, the alignment soil and groundwater conditions, the existing utility constraints and the existing surface constraints as described in this Technical Memorandum and/or shown on the project plans. Of particular note is the presence of loose non-cohesive sands that will exhibit "flowing" ground behavior. Where encountered within the areal fills, "flowing" sands will significantly increase friction around the perimeter of the new HDPE pipeline increasing installation loads and potentially limiting burst lengths.

6.4. Pipe Lubricant

A primary component of the installation load applied to pipelines installed using pipe bursting methods is the friction generated between the new pipe and the burst pipe/soil matrix as the new pipe is pulled into place. In many cases, friction (and, therefore, the installation load) on the installed pipe can be reduced through the use of pipe lubricants. Pipe lubricants (which generally consist of a mixture of bentonite and/or polymers with water) should be considered when (IPBA, 2012):

- pipe upsizing is greater than or equal to 2x;
- the new pipe diameter exceeds 12 inches;
- the burst length exceeds 300 feet;
- the host pipe is below groundwater;
- the ground conditions are unstable (e.g., flowing sands as described above); and/or
- lubricants are recommended by the bursting equipment manufacturer.

Given that the project will likely have burst lengths exceeding 300 feet, the host pipe is consistently below groundwater and the project area ground conditions include unstable (flowing) ground, lubrication is recommended. Friction forces can be further reduced by increasing the diameter of the expander head relative to the O.D. of the new pipeline. (Estimates of surface heave presented in Table 2 have been based on 10-inch and 12-inch O.D. expander heads.)

6.5. Entry, Exit and Lateral Reconnection Pits

Excavation and shoring for all entry, exit and lateral reconnection pits should follow the project specifications for open-cut trenching. Shoring for pipe bursting pits should be designed to resist the lateral earth pressures and vehicle surcharge pressures given in Figures 1 and 2, respectively. All entry, exit and lateral reconnection pits will extend below groundwater. Due to the variability of areal fills along the project alignment from fine-grained cohesive (CL) to coarse-grained cohesive (SC, GC) to fine-grained non-cohesive (ML) to coarse-grained non-cohesive (SP, GM), groundwater inflows into project excavations will be highly variable from minor in cohesive clays to copious in non-cohesive course-

grained sands and gravels. The existing areal fills will exhibit squeezing to flowing ground behavior below groundwater and will have very little to no stand-up time. Pipeline, bedding and backfill at entry, exit and lateral reconnection pits should follow the project specifications.

The length of pipe bursting pipe entry pits for HDPE pipe should be at least 2.5 times the depth of the pipeline to be burst plus 12 times the outside diameter of the new pipeline in order to provide a uniform transition and reduce the bend radius of the pipe as it enters the entry pit and existing pipe (IPBA, 2012). In addition, the entry pit should be large enough so that when the pipe is fed into the existing pipe, the minimum bending radius specified by the pipe manufacturer is not exceeded. The positioning of entry and exit pits should be given careful consideration in order to minimize impacts on traffic resulting from equipment layout, pipe string layout, etc.

6.6. Potential Ground Deformation and Surface Heave

At present, research regarding potential ground deformation and surface heave as a result of pipe bursting is in its early stages. A common industry rule of thumb to define the pipe bursting "impact zone" and minimum depth of cover to avoid surface heave is: impact zone (in inches) = (expander head O.D. – existing pipe I.D.) x 12. For this project the impact zone is (12"-6") x 12 = 72 inches or about 6 feet. This industry rule of thumb does not estimate the actual ground surface heave as a function of cavity expansion and cover depth. Research has, however, produced several empirical and analytical methods that can be used to provide an estimate of potential surface heave caused by pipe bursting cavity expansion. For this project, preliminary surface heave calculations were completed using the guidelines presented in NASTT's Pipe Bursting Good Practices Guideline, 2011 by Bennett, Ariaratnam and Wallin which account for the volume of soil displaced (i.e., cavity expansion), depth of cover, outside diameter of expander head, inside diameter of existing pipe and soil strength as represented by the soil's internal angle of friction (ϕ). For these calculations the internal angle of friction for the areal fill soil and trench backfill has been estimated at $\phi = 16°$ for cohesive soils based on direct shear testing in the 2009 geotechnical investigation report and $\phi = 28°$ based on soil classification and average Standard Penetration Test Blow Count N-values of 5 for areal fills at pipe depth and above. Given the age of the existing VCP pipeline and the findings of test boring B-3B drilled into the trench backfill, it is safe to assume that the consistency of pipe embedment material and trench backfill is similar to the areal fills (i.e., very loose to loose where granular and soft to medium stiff where cohesive). Under these conditions the cavity expansion will be relatively evenly distributed between trench backfill and areal fills (i.e., uniform distribution of cavity expansion to the ground surface).

Table 2 assumes that cavity expansion and surface heave are relatively evenly distributed between trench backfill and areal fills.

Table 2 - Anticipated Surface Heave at Pipeline Centerline – Uniform Distribution

Existing Pipe I.D. (inches)	New Pipe I.D. (inches)	Approximate New Pipe O.D.[1] (inches)	O.D. of Expander Head[2] (in.)	Depth of Cover (feet)	Anticipated Surface Heave (inches)[3]
Cohesive Areal Fill and Trench Backfill, ϕ = 16°					
6	8	9	10	5.5	0.5
6	8	9	10	13.5	0.2
6	8	9	12	5.5	0.8
6	8	9	12	13.5	0.4
Granular Areal Fill and Trench Backfill, ϕ= 28°					
6	8	9	10	5.5	0.4
6	8	9	10	13.5	0.2
6	8	9	12	5.5	0.7
6	8	9	12	13.5	0.3

[1] Assumes DR 17 HDPE and DR 18 FPVC both with 9.05" O.D.
[2] Assumes one-half to one and one-half inch radial overexpansion to minimize new pipeline installation pulling force.
[3] Directly over pipe centerline.

The distance from the pipeline centerline over which heave will occur can be approximated by guidelines presented in NASTT's Pipe Bursting Good Practices Guideline, 2011 by Bennett, Ariaratnam and Wallin. Surface heave is a maximum over the centerline of the pipeline and tapers to zero at the approximate lateral distances given in Table 3.

Table 3 - Anticipated Lateral Extent of Surface Heave

Depth of Cover (feet)	Approximate Lateral Extent of Surface Heave from Centerline of Pipeline (feet)[1]
5.5	8′ (ϕ = 16°) 10′ (ϕ = 28°)
13.5	19′ (ϕ = 16°) 24′ (ϕ = 28°)

[1] The lateral distance where surface heave = 0 inches.

Surface heave over the pipeline centerline will be bracketed by the values given in Table 2 as a function of depth of cover and O.D. of the expander head. Even with the largest anticipated pipe bursting expander (i.e., 12") and the shallowest cover (i.e., 5.5′) the maximum anticipated surface heave is less than 1 inch. It is not uncommon that initial surface heave caused by the passage of the pipe bursting expander will settle back down over the new smaller O.D. pipeline behind the expander. In addition, the areal fills are "displaceable" (i.e. loose and soft) and where remaining loose and soft will likely absorb the cavity expansion without surface heave. Therefore, permanent surface heave from pipe bursting should be less that one inch where cover is shallow and less than one-half inch where cover is deep. This amount of surface heave will barely be noticeable in the street asphalt pavement but will likely cause cracking of the more rigid concrete curb and gutter. Typical countermeasures to control

and limit pavement damage resulting from surface heave include saw cutting the pavement above the pipeline to be burst. In the event that unacceptable, permanent pavement damage occurs as the result of surface heave, the damage will generally be limited to the zone between the saw cuts. Saw cutting the asphalt pavement overlying this project's pipe bursting should not be necessary for the relatively minor anticipated surface heave. Repairs to the concrete curb and gutter overlying the existing sewer pipeline should be anticipated.

The surface heave estimates detailed above provide a general indication of ground movement directly above and away from the center of the bursting operation and can be assumed to apply, to some degree, in all directions above and beside the burst pipe. As a result, there is potential for damage to existing nearby utilities resulting from ground movements associated with the planned pipe bursting operations. All utilities crossing above the proposed pipe bursting should be protected by potholing beneath them to create a minimum 6-inch air gap beneath the protected utility (pre-bursting mitigation). Where utilities run parallel to the planned burst with a radial separation less than 5 feet, that utility should be evaluated for protection as a function of utility type, age, condition and consequence of damage. For example, a natural gas pipeline will take precedence over all others.

6.7. Potential Vibrations and their Effect on Existing Utilities and Structures

Research by Atalah and others (1998) has shown that ground vibrations are generally of concern only where pneumatic pipe bursting equipment is used. For pneumatic pipe bursting equipment, Atalah and others (1998) report that damaging vibration levels (that is, peak particle velocities greater than 5 inches per second) for buried structures typically occur at distances less than 2.5 feet. Where existing utilities cross or run parallel to a planned pneumatic pipe burst with a radial separation less than 2.5 feet, that the utility should be potholed (crossing utility) or exposed (parallel utility) to provide vibration relief to the existing utility.

For sensitive surface structures, Atalah and others (1998) report that damaging vibration levels (that is, peak particle velocities greater than 2 inches per second) typically occur at distances less than 8 feet. The human perception of vibrations occurs at a level much lower than damage levels (generally on the order of 0.2 inches per second). As a result, reports of feeling vibrations within or in front of nearby buildings should be expected. While building damage is not expected, typical pre- and post-construction crack and damage surveys should be completed for buildings along the alignment to document pre-existing conditions and any damages that may occur.

Regardless of the countermeasures put in place (e.g., saw cutting of surface pavements directly above pipe bursting alignment, exposure of crossing utilities in open potholes, etc.), the project specifications should require that the Contractor be responsible for all damage to adjacent utilities, pavements and improvements that result from project construction.

6.8. Pipeline Design for Pipe Bursting Construction

For construction methods such as pipe bursting, installation loads rather than service loads can often govern pipeline design. Calculations of both loading conditions (installation and service) should be performed, and the most conservative loading condition used to determine the design pipeline stiffness and wall thickness. Pipelines for installation by pipe bursting should be designed with a minimum factor of safety of 2 for installation loading conditions. For burst lengths determined by the Contractor, the Contractor should submit calculations of estimated installation loading on the pipeline.

In addition to the above, the replacement pipeline should be designed with additional wall thickness as a countermeasure against possible gouging from displaced pipe fragments. The first few feet of all pipelines installed by pipe bursting should be inspected for gouges as they enter into the pipe bursting exit pit. Acceptable levels of gouging should be established in the project specifications, with specific countermeasures specified in case of excessive gouging. Countermeasures against gouging may include, but are not limited to:

- fusing additional pipe to the end of the new pipe and pulling additional length if the gouging is confined to the first few feet of the new pipe;
- full-length replacement of the gouged pipe by pulling a second, thicker pipe through the burst hole with a larger bursting head;
- replacement of the full length or sections of the gouged pipe by open-cut trenching; and/or
- repair of the gouged pipe by internal methods such as cured-in-place lining or sliplining.

6.9. Lateral and Manhole Connections

Lateral connections, if left connected, will be damaged by pipe bursting. Lateral connections should be exposed and disconnected at the main line prior to removal of the 1/8-inch thick HDPE pipe liner and pipe bursting operations (pre-bursting mitigation) to reduce the risk of damage to these services as a result of pipe bursting. Laterals can then be reconnected once the new pipe is in place.

Because pipe bursting expander heads are significantly larger in diameter than the host pipe, pipe bursting through manholes must accommodate the passage of the pipe bursting head and the new pipe without damage to the manhole. This requires that manhole ingress and egress be enlarged to accommodate the equipment. Therefore, the concrete collars at the manhole ingress and egress should be enlarged to accommodate the bursting head and maintain desired grade. Likewise, if “through manhole” pipe bursting runs are made, the manhole invert bottom should be removed to facilitate bursting through the manhole.

7.0 PIPELINE LOADING

The project specifications should make the Contractor responsible for protection of the new pipelines from installation loads (e.g., pipe bursting pull loads as discussed in section 6.4) and pipe embedment and excavation backfill compaction loads (e.g., at pipe bursting pits, lateral connection pits and stress relief pits). Long-term external loads on project pipelines will consist of dead loads imposed by soil overburden and live loads imposed by vehicle traffic on City streets. Intermittent live loads imposed on the project pipelines by vehicle traffic can be estimated as a function of cover depth using the graph illustrated on Figure 3. Vehicle live loads are estimated using an H-20 truck load plus 50% impact loading.

7.1. Dead Loads on Flexible Pipelines

Dead loads from excavation backfill/soil overburden on a flexible pipeline (e.g., PVC, HDPE) may be estimated using the following prism method formula (Moser, 2008):

$$W = D \gamma H$$

Where:

W = Vertical soil load on a flexible pipeline dur to trench backfill/soil overburden (lbs./ft.)

D = Pipeline outside diameter (ft.)

γ = Unit weight of trench backfill/soil overburden (pcf)

H = Depth of trench backfill/soil overburden over the top of pipe (ft.)

Excavation backfill on new flexible pipelines will likely consist of well-compacted Class 2 aggregate base rock. The unit weight of Class 2 aggregate base rock should be taken as 150 pcf. In the event that CLSM is used as trench backfill, the unit weight of CLSM should also be taken as 150 pcf. Existing trench backfill above pipelines replaced by trenchless pipe bursting methods will consist of reworked areal fills. The unit weight of existing trench backfill should be taken as 133 pcf.

7.2. Composite Modulus of Soil Reaction (E'c)

Vertical loads on a flexible pipeline cause the pipeline to decrease in vertical diameter and increase in horizontal diameter. The horizontal movement develops a passive soil resistance, which helps to support the pipeline. The composite modulus of soil reaction (E'c) is useful for estimating the passive soil resistance that will develop in a trench for flexible pipelines. E'c is a function of the soil modulus of the pipe embedment material (E'pz), the soil modulus of the trench wall material (E'tw), trench width, pipeline depth of cover and pipeline diameter. E'pz and E'tw are in turn functions of the strength of each material.

The areal fill at the pipe zone consists of very loose to loose granular soils and soft to medium stiff cohesive soils with an average Standard Penetration Test Blow Count of N=5. For new pipelines installed by pipe bursting, E'c should be taken as 250 psi.

8.0 LIMITATIONS

This Technical Memorandum has been prepared for the exclusive use of Carollo Engineers in designing the Gate 5 Road Sewer Rehabilitation project for the City of Sausalito as described herein. This Technical Memorandum may not be used for any other purpose or for any other project. Within the present limitations of scope, schedule and budget, DCM Consulting, Inc.'s services have been provided in substantial accordance with generally accepted practices in the field of geotechnical and trenchless engineering in the San Francisco Bay Area at the time this Technical Memorandum was completed. Evaluation of potential soil and groundwater contamination and impacts on construction were not

within the scope of this geotechnical and trenchless engineering evaluation. The conclusions and recommendations presented in this Technical memorandum are based on the author's professional knowledge, judgment and experience. No other warranty or other conditions, express or implied, should be understood.

9.0 REFERENCES

1. Bennett, Ariaratnam, Wallin, Pipe Bursting Good Practices Guidelines, Second Edition, NASTT 2011.

2. Hurrell and Attewell, Ground Movements and Their Effects on Structures, 1984 Survey University Press.

3. IPBA, International Pipe Bursting Association, Guideline for Pipe Bursting, January, 2012.

4. Moser, Buried Pipe Design, Third Edition, 2008, McGraw-Hill.

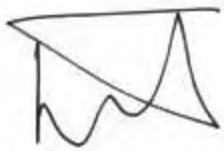

David C. Mathy
C.E. 28082
G.E. 569

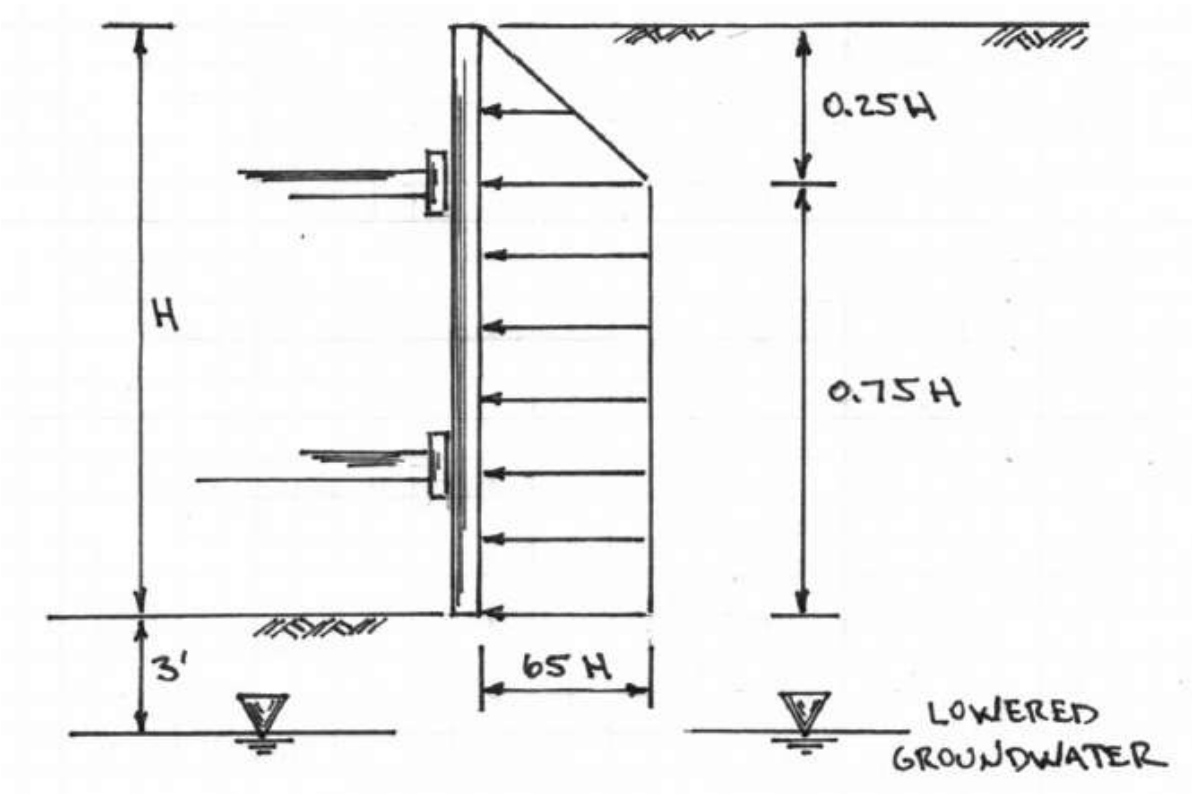

NOTES:

1. This preliminary pressure diagram is for braced excavations less than 15 feet deep. The diagram does not take into account hydrostatic pressure and assumes that, where present, groundwater is lowered a minimum of 3 feet below the base of excavation by external dewatering. Final design shoring pressure diagrams will need to be developed by the Contractor based on their selection of shoring system, dewatering system, and the actual subsurface conditions encountered during construction.

2. This preliminary pressure diagram is constructed without consideration for stockpiling of trench spoils, excavation equipment, etc. The effect of these and other types of surcharge loads must be added to these pressure diagrams where applicable. Minimum shoring pressures for traffic and equipment surcharge are provided on Figure 2.

3. Excavation base stability should be analyzed after base width has been selected.

Figure 1 – Preliminary Shoring Pressure Diagram for Lateral Connection and Pipe Bursting Pits

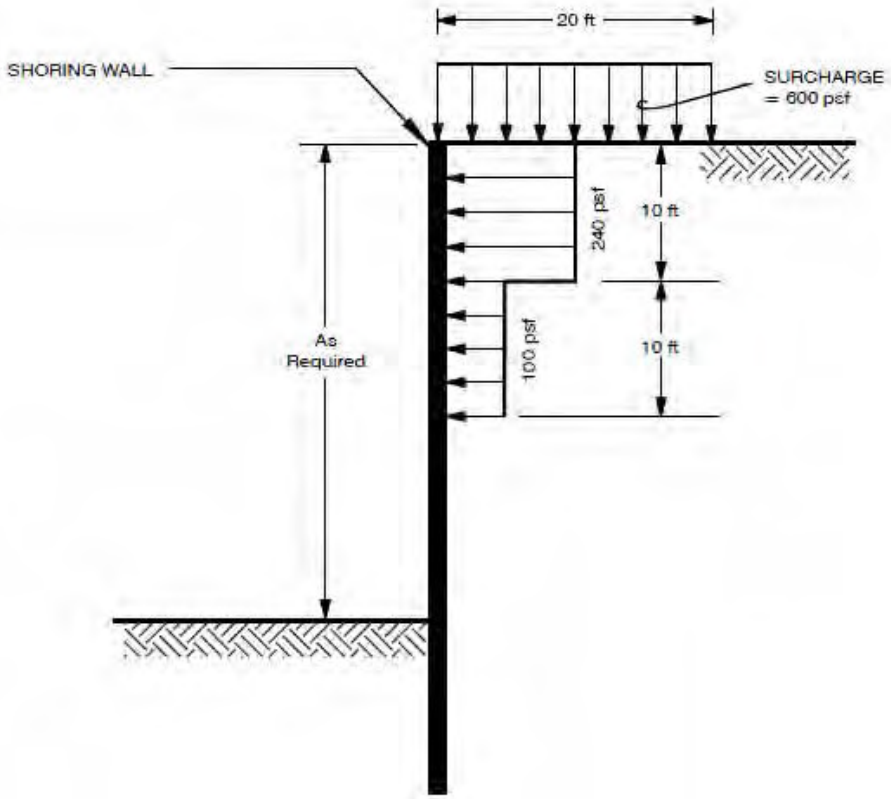

NOTE:

These are minimum shoring pressures to be used for traffic surcharges. Shoring pressures from construction activities or construction equipment that produce larger of different surcharge loading patterns than that shown should be determined by the shoring designer using geotechnical computational methods.

Figure 2 – Minimum Shoring Pressures for Traffic Surcharge

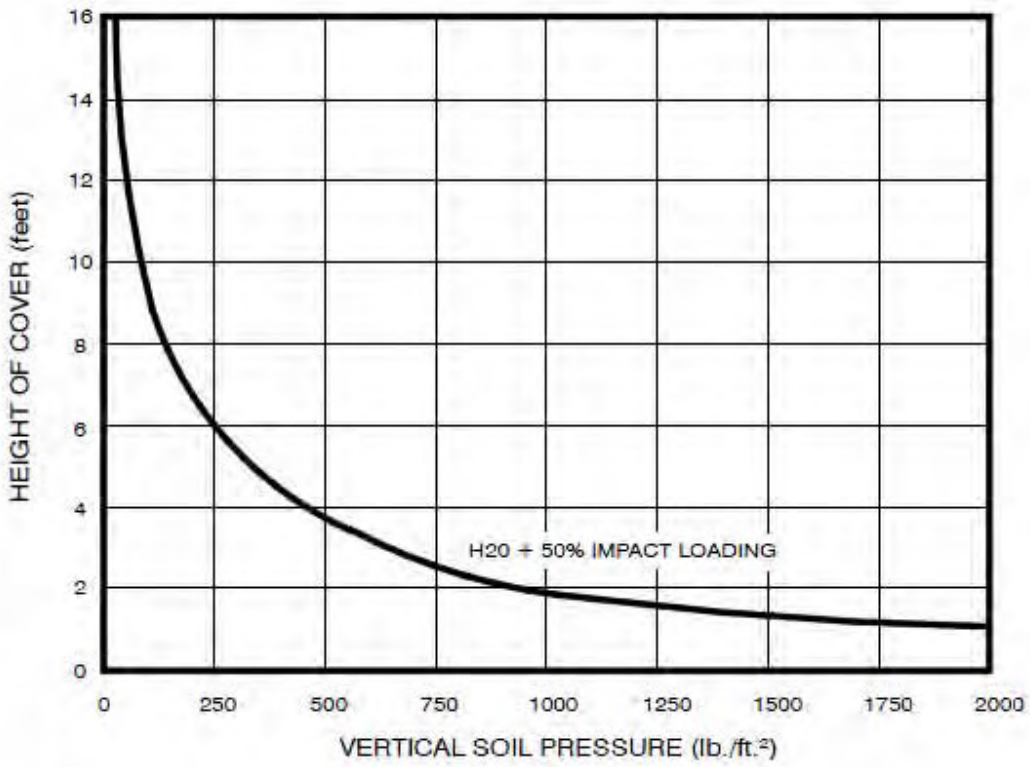

NOTES:

1. Apply vertical soil pressure to diameter of pipeline (horizontal projection) to calculate vertical pipe load.

2. H2O + 50% IMPACT LOADING: Simulates a highway load of a 20-ton truck with a 50% impact factor to account for the dynamic effects of the traffic.

Figure 3 – Vertical Soil Pressure on Pipelines Due to Live Loads

Classification		Behavior	Typical Soil Types
FIRM		Heading can be advanced without initial support and final lining can be constructed before ground starts to move	Loess above water table; hard clay marl, cemented sand and gravel when not highly overstressed.
RAVELING	**Slow Raveling**	Chucks or flakes of material begin to drop out of the arch or walls sometime after the ground has been exposed due to loosening or to overstress and "brittle" fracture (ground separates or breaks along distinct surfaces, opposed to squeezing ground). In fast raveling ground, the process starts within a few minutes; otherwise the ground is slow raveling.	Residual soils or sand with small amounts of binder may be fast raveling below the water table, slow raveling above. Stiff fissured clays may be slow or fast raveling depending upon degree of overstress.
	Fast Raveling		
SQUEEZING		Ground squeezes or extrudes plastically into tunnel, without visible fracturing or loss of continuity, and without perceptible increase in water content. Ductile, plastic yield and flow due to overstress.	Ground with low frictional strength. Rate of squeeze depends on degree of overstress. Occurs at shallow to medium depth in clay of very soft to medium consistency. Stiff to hard clay under high cover may move in combination of raveling at excavation surface and squeezing at depth behind surface.
RUNNING	**Cohesive, running**	Granular materials without cohesion are unstable at a slope greater than their angle of repose (±30-35°). When exposed at steeper slopes, they run like granulated sugar or dune sand until the slope flattens to the angle of repose.	Clean, dry granular materials. Apparent cohesion in moist sand or weak cementation in any granular soil may allow the material to stand for brief period of raveling before it breaks down and runs. Such behavior is cohesive-running.
	Running		
FLOWING		A mixture of soil and water flows into the tunnel like a viscous fluid. The material can enter the tunnel from the invert as well as from the face, crown, and walls, and can flow for great distances, completely filling the tunnel in some cases.	Below the water table in silt, sand, or gravel without enough clay content to give significant cohesion and plasticity. May also occur in highly sensitive clay when such material is disturbed.
SWELLING		Ground absorbs water, increases in volume, and expands slowly into the tunnel.	Highly preconsolidated clay with plasticity index in excess of about 30, generally containing significant percentages of montmorillonite.
REFERENCE:	Heuer, R. E., 1974, Important ground parameters in soft ground tunneling, Subsurface exploration for underground excavation and heavy construction, New England College, Henniker, New Hampshire, American Society of Civil Engineers, New York, P. 41-55.		

Figure 4 – Tunnelman's Ground Classification

The following boring location map, boring log legend and boring logs have been excerpted from the 2009 Geotechnical Investigation Report referenced on page 1 of the Technical Memorandum dated January 6, 2016. Refer to the 2009 Geotechnical Investigation Report for descriptions of the subsurface investigation completed (e.g. drill rig used, sampling procedures, physical laboratory testing, etc.). The pipeline depths shown on the 2009 boring logs may vary from the current 2015/2016 project plans and profiles.

APPENDIX A

See Plate I-1

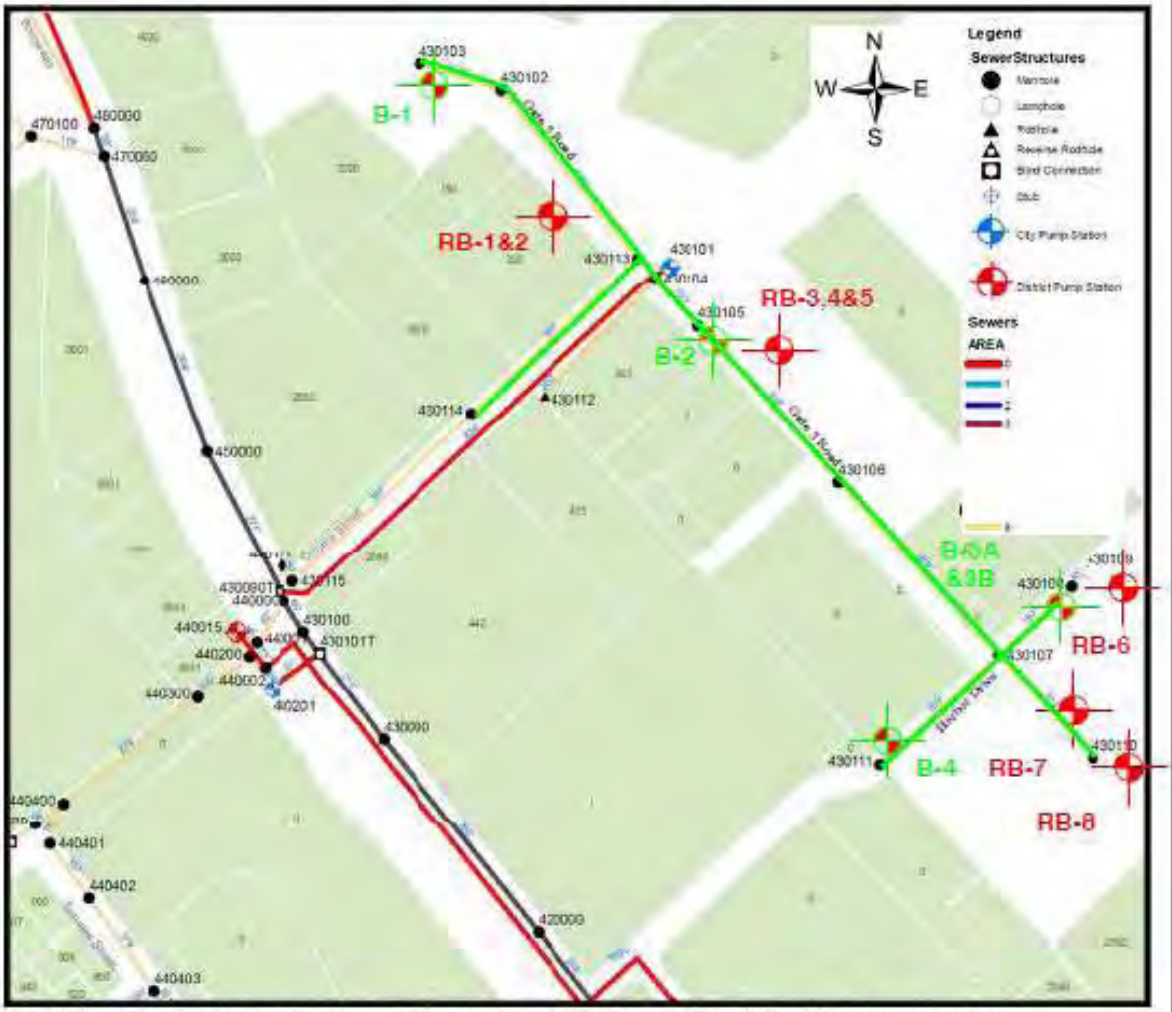

Modified from 2007 City drawings and in-progress project design plans (West Yost Associates, 2009).

B-1 Project Test Boring

- Planned New Gravity Sanitary Sewer Pipeline (shown offset from existing pipeline for illustration purposes only)

RB-1 Reference Test Boring

DCM | GEOENGINEERS

FILE NO. 18337-001-00 | AUGUST 2009

WEST YOST ASSOCIATES
City of Sausalito
Priority 1 Sewer Replacement
Sausalito, California
BORING LOCATION MAP - GATE 5 ROAD AREA

PLATE NO.
I-2
(COLOR PLATE)

KEY TO PROJECT BORING LOGS IN APPENDIX B

- Grab sample
- 1.4" I.D./2" O.D. Standard Penetration Test (ASTM D1586) sampler (SPT)
- 2.5" I.D./3" O.D. Modified California sampler (MCS) with brass liners
- 2.9" I.D./3" O.D. Shelby tube sample
- Water level measured at end of drilling
- Projected project pipeline

RELATIVE DENSITY		CONSISTENCY		
SANDS AND GRAVELS	SPT, N	SILTS AND CLAYS	SPT, N	UNCONFINED COMPRESSIVE STRENGTH, tsf
VERY LOOSE	0-4	VERY SOFT	0-2	0-0.25
LOOSE	4-10	SOFT	2-4	0.25-0.50
MEDIUM DENSE	10-30	MEDIUM STIFF	4-8	0.50-1.00
DENSE	30-50	STIFF	8-15	1.00-2.00
VERY DENSE	50+	VERY STIFF	15-30	2.00-4.00
		HARD	30+	>4.00

Reference: Terzaghi, K. and Peck, R., SOIL MECHANICS IN ENGINEERING PRACTICE, 2nd ed., John Wiley and Sons, New York, 1967, Page 341 Table 45.1 and pp. 347 Table 45.2.

CONSTITUENT DESCRIPTIONS	
DESCRIPTION	CRITERIA
TRACE	less than 5%
FEW	5% to 10%
LITTLE	15% to 25%
SOME	30% to 45%
MOSTLY	50% to 100%

Reference: ASTM D2488, Note 15

MOISTURE CONDITION	
DESCRIPTION	CRITERIA
DRY	Absence of moisture, dusty, dry to the touch
MOIST	Damp but no visible water
WET	Visible free water, usually soil is below water table

Reference: ASTM D2488, Table 3 - Criteria for Describing Moisture Condition

GROUND BEHAVIOR	CLASSIFICATION
Ground that can be excavated without initial support and where shoring can be installed before the ground starts to move. For example, unfissured hard clay when not highly overstressed.	Firm
Ground of which chunks or flakes begin to fall off excavation walls. If raveling starts within a few minutes of excavation then it is "fast" raveling; otherwise, it is "slow" raveling. Silts and sands with clay binder may be fast raveling. Stiff fissured clays may be slow or fast raveling depending upon the degree of overstress.	Raveling
Ground that squeezes or plastically extrudes into excavations without visible fracturing. Can occur at shallow to medium depth in very soft to medium stiff clay, and can occur in stiff to hard clay under high overstress.	Squeezing
Ground consisting of clean dry granular material (e.g., sand and gravel) that moves by gravity to its angle of repose.	Running
Ground in a fluid-like condition (e.g., a disturbed mixture of predominantly silt, sand and/or gravel with water), that flows across pressure gradients.	Flowing
Ground that expands in volume due to the absorption of water (e.g., clays).	Swelling

Reference: Modified from Heuer, R.E., 1974, Important ground parameters in soft ground tunneling, Subsurface exploration for underground excavation and heavy construction, New England College, Henniker, New Hampshire, American Society of Civil Engineers, New York, P. 41-55.

NOTES:

1. Lines separating strata in the logs represent approximate boundaries and are dashed where strata change depth is less certain. Strata change may be gradual.
2. Penetration Resistance (blows/ft.) are the last 12" of an 18" drive using a 140-pound cathead hammer falling 30 inches per blow unless noted otherwise. The Penetration Resistance values noted on the logs are actual blows per foot of penetration for the respective sampler type (i.e., MCS sampler penetration resistance blow counts have not been reduced to approximate SPT sampler "N" values).
3. All borings were made with a Mobile B-24 drill rig using 5-inch diameter continuous flight solid stem augers.
4. See plates in Appendix C for grain size definitions and nomenclature.

DCM | GEOENGINEERS

FILE NO. 18337-001-00 | AUGUST 2009

WEST YOST ASSOCIATES
City of Sausalito
Priority 1 Sewer Replacement
Sausalito, California

BORING LOG LEGEND

PLATE NO.
A-1
(1 of 2)

KEY TO PROJECT BORING LOGS IN APPENDIX B (Cont'd)

UNIFIED SOIL CLASSIFICATION SYSTEM

CRITERIA FOR ASSIGNING GROUP SYMBOLS AND GROUP NAMES[A]				SOIL CLASSIFICATION	
				GROUP SYMBOL	GROUP NAME[B]
COARSE-GRAINED SOILS More than 50% retained on No. 200 sieve	GRAVELS More than 50% of coarse fraction retained on No. 4 sieve	Clean Gravels < 5% fines[C]	Cu ≥ 4 and 1 ≤ Cc ≤ 3[E]	GW	Well-graded gravel[F]
			Cu < 4 and/or 1 > Cc > 3[E]	GP	Poorly graded gravel[F]
		Gravels with Fines > 12% fines[C]	Fines classify as ML or MH	GM	Silty gravel[F,G,H]
			Fines classify as CL or CH	GC	Clayey gravel[F,G,H]
	SANDS 50% or more of coarse fraction passes No. 4 sieve	Clean Sands < 5% fines[D]	Cu ≥ 6 and 1 ≤ Cc ≤ 3[E]	SW	Well-graded sand[I]
			Cu < 6 and/or 1 > Cc > 3[E]	SP	Poorly graded sand[I]
		Sands with Fines > 12% fines[D]	Fines classify as ML or MH	SM	Silty sand[G,H,I]
			Fines classify as CL or CH	SC	Clayey sand[G,H,I]
FINE-GRAINED SOILS 50% or more passes the No. 200 sieve	SILTS AND CLAYS Liquid limit ≤ 50	Inorganic	PI > 7 plots on or above "A" line[J]	CL	Lean clay[K,L,M]
			PI < 4 plots below "A" line[J]	ML	Silt[K,L,M]
		Organic	Liquid limit-oven dried / Liquid limit-not dried < 0.75	OL	Organic Clay[K,L,M,N] Organic Silt[K,L,M,O]
	SILTS AND CLAYS Liquid limit > 50	Inorganic	PI plots on or above "A" line	CH	Fat clay[K,L,M]
			PI plots below "A" line	MH	Elastic silt[K,L,M]
		Organic	Liquid limit-oven dried / Liquid limit-not dried < 0.75	OH	Organic Clay[K,L,M,P] Organic Silt[K,L,M,Q]
HIGHLY ORGANIC SOILS		Primarily organic matter, dark color and organic odor		PT	Peat

NOTES:

A Based on the material passing the 3-in. (75mm) sieve.

B If field sample contained cobbles or boulders, or both, add "with cobbles or boulders, or both" to group name.

C Gravels with 5% to 12% fines require dual symbols:
GW-GM well-graded gravel with silt
GW-GC well-graded gravel with clay
GP-GM poorly graded gravel with silt
GP-GC poorly graded gravel with clay

D Sands with 5% to 12% fines require dual symbols:
SW-SM well-graded sand with silt
SW-SC well-graded sand with clay
SP-SM poorly graded sand with silt
SP-SC poorly graded sand with clay

E $Cu = \frac{D_{60}}{D_{10}}$ $Cc = \frac{(D_{30})^2}{D_{10} \times D_{60}}$

F If soil contains ≥ 15% sand, add "with sand" to group name.

G If fines classify as CL-ML, use dual symbol GC-GM, or SC-SM.

H If fines are organic, add "with organic fines" to group name.

I If soil contains ≥ 15% gravel, add "with gravel" to group name.

J If Atterberg limits plot in hatched area, soil is a CL-ML (silty clay).

K If soil contains 15% to 29% plus No. 200,add "with sand" or "with gravel", whichever is predominant.

L If soil contains ≥ 30% plus No.200, predominantly sand, add "sandy" to group name.

M If soil contains ≥ 30% plus No.200, predominantly gravel, add "gravelly" to group name.

N PI ≥ 4 and plots on or above "A" line.

O PI < 4 or plots below "A" line.

P PI plots on or above "A" line.

Q PI plots below "A" line.

DCM | GEOENGINEERS

WEST YOST ASSOCIATES
City of Sausalito
Priority 1 Sewer Replacement
Sausalito, California

BORING LOG LEGEND

PLATE NO.
A-1
(2 of 2)

FILE NO. 18337-001-00 | AUGUST 2009

LOG OF BORING B-1 ①

LOCATION: See Plate I-1
BORING SURFACE ELEVATION: 10'
PROJECTED STATION: 15 + 95
PLANNED PIPELINE INVERT ELEVATION: 2'

DEPTH (ft)	SAMPLE NO.	TYPE	PENETRATION RESISTANCE (blows/ft)	③ GROUNDWATER	DESCRIPTION ②	% MOISTURE	DRY DENSITY (lbs./ft.³)	LIQUID LIMIT	PLASTICITY INDEX	GRAIN SIZE: % Gravel (>#4 sieve)	GRAIN SIZE: % Sand (#4 to #200 sieve)	GRAIN SIZE: % Fines (<#200 sieve)	UNCONFINED COMPRESSIVE STRENGTH (kips/ft.²)	DIRECT SHEAR: Cohesion (p.s.f.)	DIRECT SHEAR: Internal Friction Angle
					GATE 5 ROAD: 10 inches asphalt concrete over 20 inches aggregate base - base layer contains few to some coarse gravel										
	1	X			**CLAYEY SAND WITH GRAVEL (SC) - FILL** - dark yellowish brown - coarse-grained angular gravel - fine sand - silty - dry										
5															
	2		6	▼	**CLAYEY GRAVEL WITH SAND (GC) - FILL** - dark gray - few to little medium and coarse sand - very loose to loose grading to medium dense - wet - Sandy Lean Clay (CL) from 8 - 8½' Borehole sloughing below ~5' (see table below) ⑤	10	129			45	39	16			
	3		4												
10															
	4		7												
	5		10												
					CLAYEY SAND WITH GRAVEL (SC) - FILL - dark gray - medium to coarse sand - loose - wet										
15															
	6		8			12									
20					**BOTTOM OF BORING AT 19 FEET**										
25															

SLOUGH DEPTHS ON SAMPLING

Sample No.	Slough Depth*
6	8'

*Slough depth measured up from intended sample depth.

NOTES:
① Drilled 7/6/09 using a Mobile B-24, 8" diameter solid stem augers, and a 30" drop by 140 lb. cathead sampling hammer.
② See report text in Section I and plates in Appendices A and C for definitions, lab test results, and additional soil descriptions.
③ Free groundwater level measured in boring at depth of 6½ feet after drilling. Static equilibrium groundwater depth is unknown.
④ Rounded from in-progress design plans (West Yost Associates, 2009).
⑤ Projected planned 8" ID pipeline.

DCM | GEOENGINEERS

WEST YOST ASSOCIATES
City of Sausalito
Priority 1 Sewer Replacement
Sausalito, California

PLATE NO. B-1

FILE NO. 18337-001-00 | AUGUST 2009 | BORING LOG B-1

LOG OF BORING B-2 ①

LOCATION: See Plate I-1
BORING SURFACE ELEVATION: 8'
PROJECTED STATION: 21 + 00
PLANNED PIPELINE INVERT ELEVATION: -5'

DEPTH	SAMPLE NO.	TYPE	PENETRATION RESISTANCE	GROUNDWATER	DESCRIPTION ②	% MOISTURE	DRY DENSITY (lbs/ft³)	LIQUID LIMIT	PLASTICITY INDEX	GRAIN SIZE: % Gravel (+#4 sieve)	GRAIN SIZE: % Sand (#4 to #200 sieve)	GRAIN SIZE: % Fines (-#200 sieve)	UNCONFINED COMPRESSIVE STRENGTH (kips/ft²)	DIRECT SHEAR: Cohesion (p.s.f.)	DIRECT SHEAR: Internal Friction Angle
	1				**GATE 5 ROAD:** 6 inches asphalt concrete over 24 inches aggregate base										
5	2		12	▼	**GRAVELLY LEAN CLAY WITH SAND (CL) - FILL** - brownish yellow to dark brownish yellow, becoming reddish with depth - angular gravel - fine sand - medium to low plasticity - stiff - dry to moist			40	18						
10	3 4		8 4		**POORLY GRADED GRAVEL (GP) - FILL** - dark brown - angular gravel - very loose to loose - wet Borehole sloughing below 5½' (see table below)					86	10	4			
15	5		2		**POORLY GRADED SAND (SP) - FILL** - brown - trace gravel - fine to medium sand - loose - wet	③ 20									
	6		5		**CLAYEY GRAVEL WITH SAND (GC) - FILL** - dark grayish brown - subangular coarse gravel - loose - wet	14									
20					**BOTTOM OF BORING AT 18½ FEET**										
25															

SLOUGH DEPTHS ON SAMPLING

Sample No.	Slough Depth*
3	1½'
4	3'
5	6½'

*Slough depth measured up from intended sample depth.

NOTES
① Drilled 7/6/09 using a Mobile B-24, 5" diameter solid stem augers, and a 30" drop by 140 lb. cathead sampling hammer.
② See report text in Section I and plates in Appendices A and C for definitions, lab test results, and additional soil descriptions.
③ Free groundwater level measured in boring at depth of 4 feet after drilling. Static equilibrium groundwater depth is unknown.
④ Rounded from in-progress design plans (West Yost Associates, 2009).
⑤ Projected planned 8" ID pipeline.

DCM | GEOENGINEERS

WEST YOST ASSOCIATES
City of Sausalito
Priority 1 Sewer Replacement
Sausalito, California

PLATE NO.
B-2

FILE NO. 18337-001-00 | AUGUST 2009 | BORING LOG B-2

LOG OF BORING B-3A①

LOCATION: See Plate I-1
BORING SURFACE ELEVATION: 7½'
PROJECTED STATION: 46 + 60
PLANNED PIPELINE INVERT ELEVATION: 1'

DEPTH (ft)	SAMPLE NO.	TYPE	PENETRATION RESISTANCE (blows/ft)	③GROUNDWATER	DESCRIPTION ②	% MOISTURE	DRY DENSITY (lbs./ft.³)	LIQUID LIMIT	PLASTICITY INDEX	GRAIN SIZE: Gravel (% > #4 sieve)	GRAIN SIZE: Sand (#4 to #200 sieve)	GRAIN SIZE: Fines (% < #200 sieve)	UNCONFINED COMPRESSIVE STRENGTH (tsf)	DIRECT SHEAR: Cohesion (p.s.f.)	DIRECT SHEAR: Internal Friction Angle
					HARBOR DR: 6 inches asphalt concrete over 18 inches aggregate base										
					LEAN CLAY WITH SAND (CL) - FILL - yellowish brown - trace gravel - medium grained sand - medium plasticity - moist										
5					**LEAN CLAY WITH SAND (CL) - FILL** - dark yellowish brown and dark gray - few to some jumbled pockets of sand and gravel - dry to moist ③										
	1		9	▼	**LEAN CLAY (CL) - FILL** - light olive brown - few fine sand	21	105							480	16°
	2		5		- trace medium sand-sized to coarse gravel-sized pieces of brick - medium plasticity - medium stiff - moist					CORROSION TEST Samples 1 & 2 See Plate C-5					
10					**LEAN CLAY (CL) TO FAT CLAY (CH) - FILL** - dark gray to dark greenish gray and few dark yellowish brown - trace organics - trace shells - trace gravel - fine to medium sand; content varies throughout from trace to little - medium to high plasticity - soft to medium stiff - moist to wet										
	3		6			21	109						1.40		
	4		6					82	49						
15					**ORGANIC CLAY (OH) - FILL** - black - organic odor - high plasticity - medium stiff - moist to wet					LL RATIO O.D./N.D. = 0.67					
	5		pushed		**LEAN CLAY (CL) - FILL** - dark grayish brown - trace to few fine gravel - trace to few fine sand - medium plasticity - medium stiff - wet										
	6		8												
20					**SANDY LEAN CLAY WITH GRAVEL (CL) - FILL** - dark greenish gray to dark bluish gray - coarse sand - angular gravel - low to medium plasticity - medium stiff - wet										
					BOTTOM OF BORING AT 20 FEET										
25															

NOTES
① Drilled 7/6/09 using a Mobile B-24, 8" diameter solid stem augers, and a 30" drop by 140 lb. cathead sampling hammer.
② See report text in Section I and plates in Appendices A and C for definitions, lab test results, and additional soil descriptions.
③ Free groundwater level measured in boring at depth of 7 feet after drilling. Static equilibrium groundwater depth is unknown.
④ Rounded from in-progress design plans (West Yost Associates, 2009).
⑤ Projected planned 8" ID pipeline.

DCM | GEOENGINEERS

FILE NO. 18337-001-00 | AUGUST 2009

WEST YOST ASSOCIATES
City of Sausalito
Priority 1 Sewer Replacement
Sausalito, California

BORING LOG B-3A

PLATE NO.
B-3A

LOG OF BORING B-3B ①

LOCATION: See Plate I-1
BORING SURFACE ELEVATION: 7½'
PROJECTED STATION: 46 + 60
PLANNED PIPELINE INVERT ELEVATION: 1'

DEPTH (feet)	SAMPLE NO.	TYPE	PENETRATION RESISTANCE (blows/ft)	⑥ GROUNDWATER	DESCRIPTION ②	% MOISTURE	DRY DENSITY (lbs./ft.³)	LIQUID LIMIT	PLASTICITY INDEX	GRAIN SIZE: Gravel (+#4 sieve) %	GRAIN SIZE: Sand (#4 to #200 sieve) %	GRAIN SIZE: Fines (-#200 sieve) %	UNCONFINED COMPRESSIVE STRENGTH (kips/ft.²)	DIRECT SHEAR: Cohesion p.s.f.	DIRECT SHEAR: Internal Friction Angle
					HARBOR DR: 6 inches asphalt concrete over 16 inches aggregate base										
	1	X			**LEAN CLAY WITH SAND (CL) - TRENCH BACKFILL** - yellowish brown - medium plasticity - trace gravel - moist - medium grained sand	21		47	21						
5					**BOTTOM OF BORING AT 3½ FEET** ③										
10															
15															
20															
25															

NOTES
① Drilled 7/9/09 using a Mobile B-24, 5" diameter solid stem augers, and a 30" drop by 140 lb. cathead sampling hammer.
② See report text in Section I and plates in Appendices A and C for definitions, lab test results, and additional soil descriptions.
③ Free groundwater level was not encountered during drilling. Static equilibrium groundwater depth is unknown.
④ Rounded from in-progress design plans (West Yost Associates, 2009).
⑤ Existing Priority pipeline to be replaced with planned 8" ID pipeline.

DCM GEOENGINEERS

WEST YOST ASSOCIATES
City of Sausalito
Priority 1 Sewer Replacement
Sausalito, California

PLATE NO. B-3B

FILE NO. 18337-001-00 | AUGUST 2009 | BORING LOG B-3B

LOG OF BORING B-4 ①

LOCATION: See Plate I-1
BORING SURFACE ELEVATION: 11' ④
PROJECTED STATION: 42 + 60
PLANNED PROFILE D INVERT ELEVATION: 1½' ⑤

DEPTH (feet)	SAMPLE NO.	TYPE	PENETRATION RESISTANCE (blows/ft)	③ GROUNDWATER	DESCRIPTION ②	% MOISTURE	DRY DENSITY (lbs./ft.³)	LIQUID LIMIT	PLASTICITY INDEX	GRAIN SIZE % Gravel (>#4 sieve)	GRAIN SIZE % Sand (#4 to #200 sieve)	GRAIN SIZE % Fines (<#200 sieve)	UNCONFINED COMPRESSIVE STRENGTH (kips/ft.²)	DIRECT SHEAR Cohesion p.s.f.	DIRECT SHEAR Internal Friction Angle
	1				**HARBOR DR:** 4 inches asphalt concrete over 22 inches aggregate base										
	2		25		**LEAN CLAY (CL) - FILL** - very dark brown - medium plasticity - trace sand and fine gravel - dry										
5	3		10	▼	**LEAN CLAY WITH SAND (CL) - FILL** - dark gray - medium plasticity - angular gravel - moist - fine gravel to cobble at 3½'; broken by sampler - very stiff					38	44	18			
	4		10		**CLAYEY SAND WITH GRAVEL (SC) - FILL** - brown with yellowish brown splotches - very loose to loose - moist - all sizes sand and gravel	12	124			54	28	18			
10	5		4		**CLAYEY GRAVEL WITH SAND (GC) - FILL** - brown - very loose to loose - angular to subrounded gravel - wet - ~2½" gravel near 9'					47	32	21			
	6		7		**SILTY SAND (SM) - FILL** - very dark gray - trace fine angular gravel - coarse sand - loose - wet										
15					Borehole sloughing below 7' (see table below)										
	7		4		**SILTY SAND WITH GRAVEL (SM) - FILL** - brown - fine angular gravel - coarse sand - very loose to loose - wet										
20					**BOTTOM OF BORING AT 20 FEET**										
25															

SLOUGH DEPTHS ON SAMPLING

Sample No.	Slough Depth*
4	¾'
6	6'

*Slough depth measured up from intended sample depth.

NOTES:
① Drilled 7/6/09 using a Mobile B-24, 5" diameter solid stem augers, and a 30" drop by 140 lb. cathead sampling hammer.
② See report text in Section I and plates in Appendices A and C for definitions, lab test results, and additional soil descriptions.
③ Free groundwater level measured in boring at depth of 6 feet after drilling. Static equilibrium groundwater depth is unknown.
④ Rounded from in-progress design plans (West Yost Associates, 2009).
⑤ Projected planned 8" ID pipeline.

DCM | GEOENGINEERS

WEST YOST ASSOCIATES
City of Sausalito
Priority 1 Sewer Replacement
Sausalito, California

PLATE NO. B-4

FILE NO. 18337-001-00 | AUGUST 2009 | BORING LOG B-4

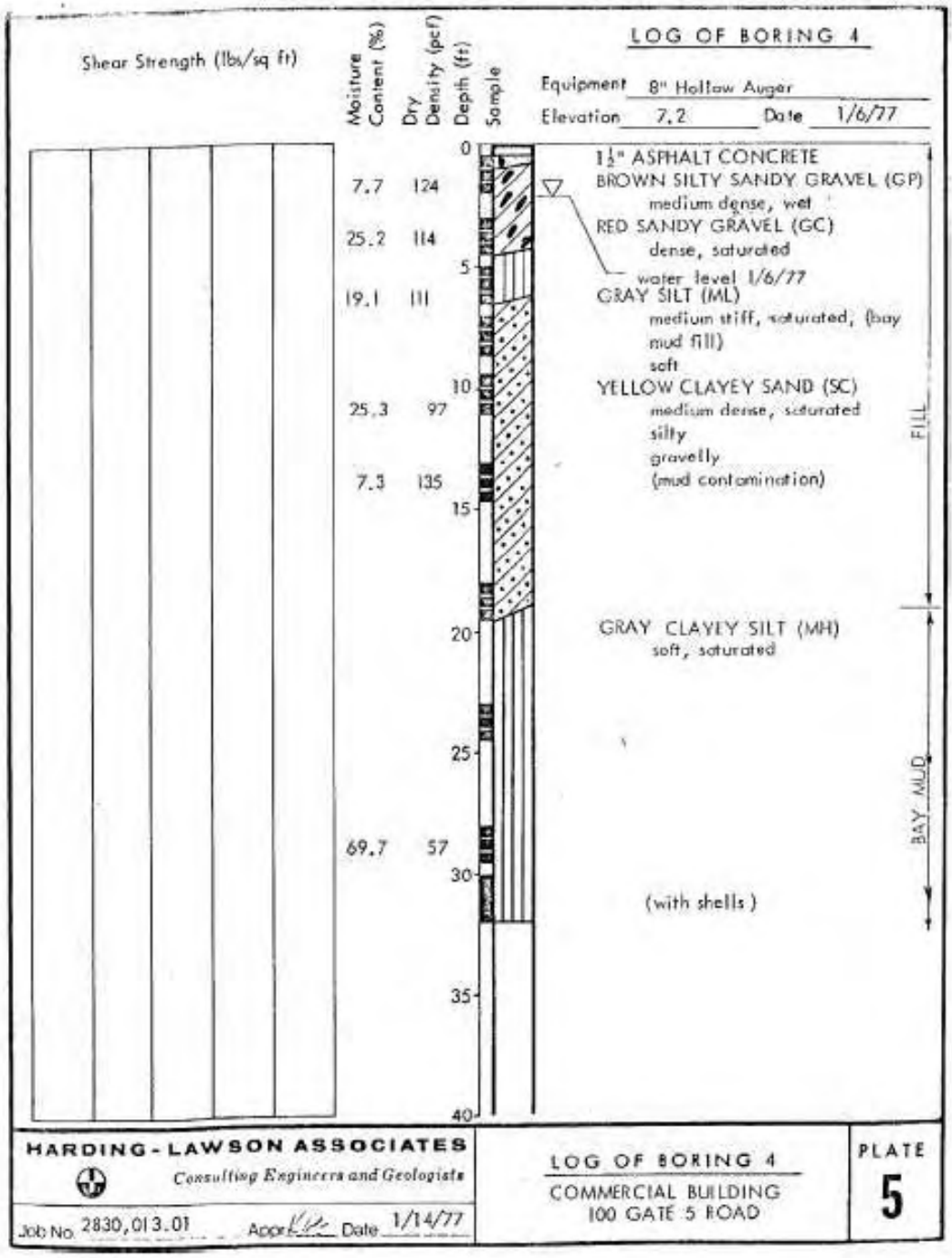

Modified from Harding Lawson and Associates (1977)

DCM | GEOENGINEERS

FILE NO. 18337-001-00 | AUGUST 2009

WEST YOST ASSOCIATES

City of Sausalito
Priority 1 Sewer Replacement
Sausalito, California

REFERENCE BORING RB-1

PLATE NO.

D-1

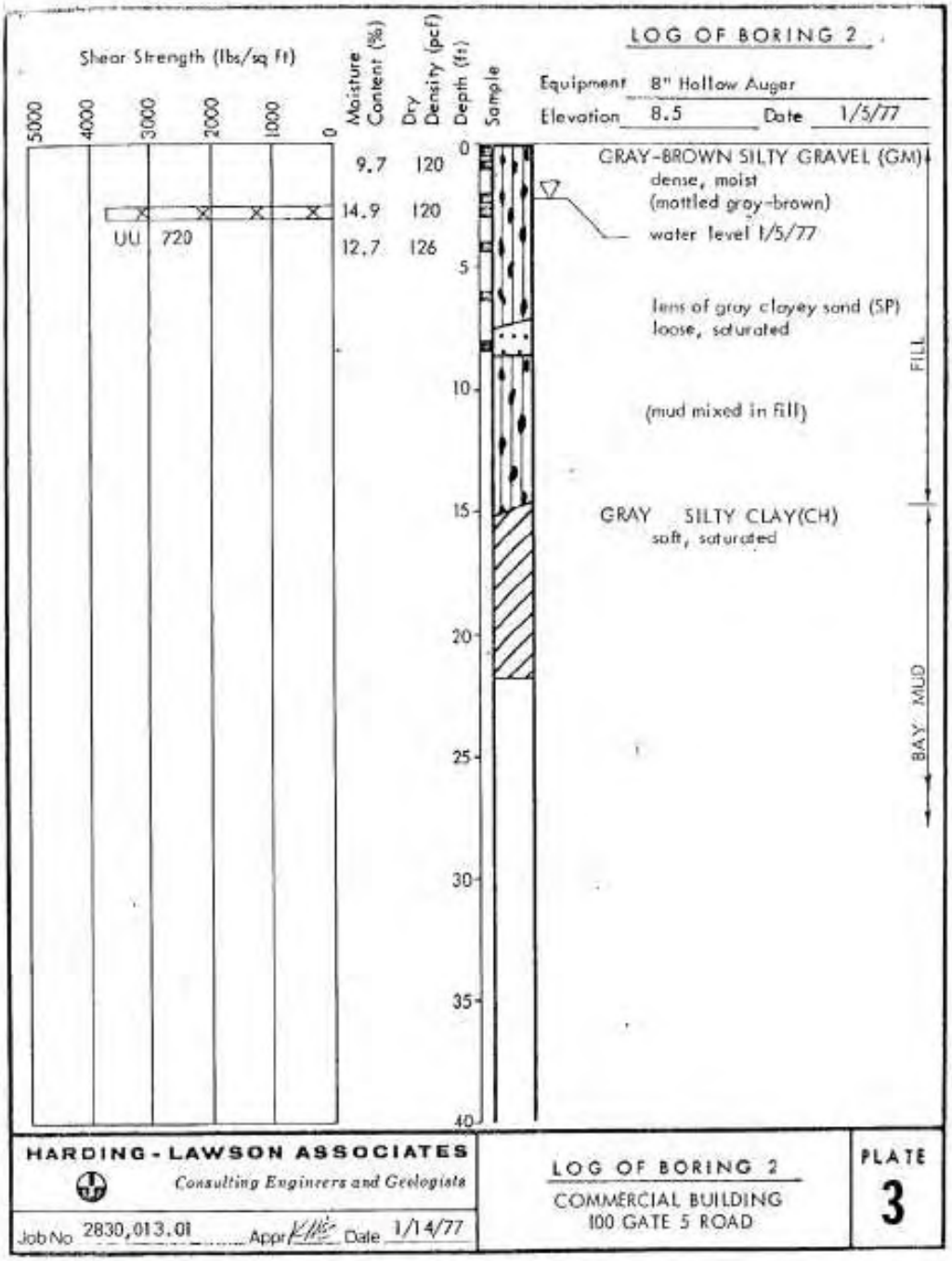

Modified from Harding Lawson and Associates (1977)

DCM GEOENGINEERS

FILE NO. 18337-001-00 | AUGUST 2009

WEST YOST ASSOCIATES

City of Sausalito
Priority 1 Sewer Replacement
Sausalito, California

REFERENCE BORING RB-2

PLATE NO.

D-2

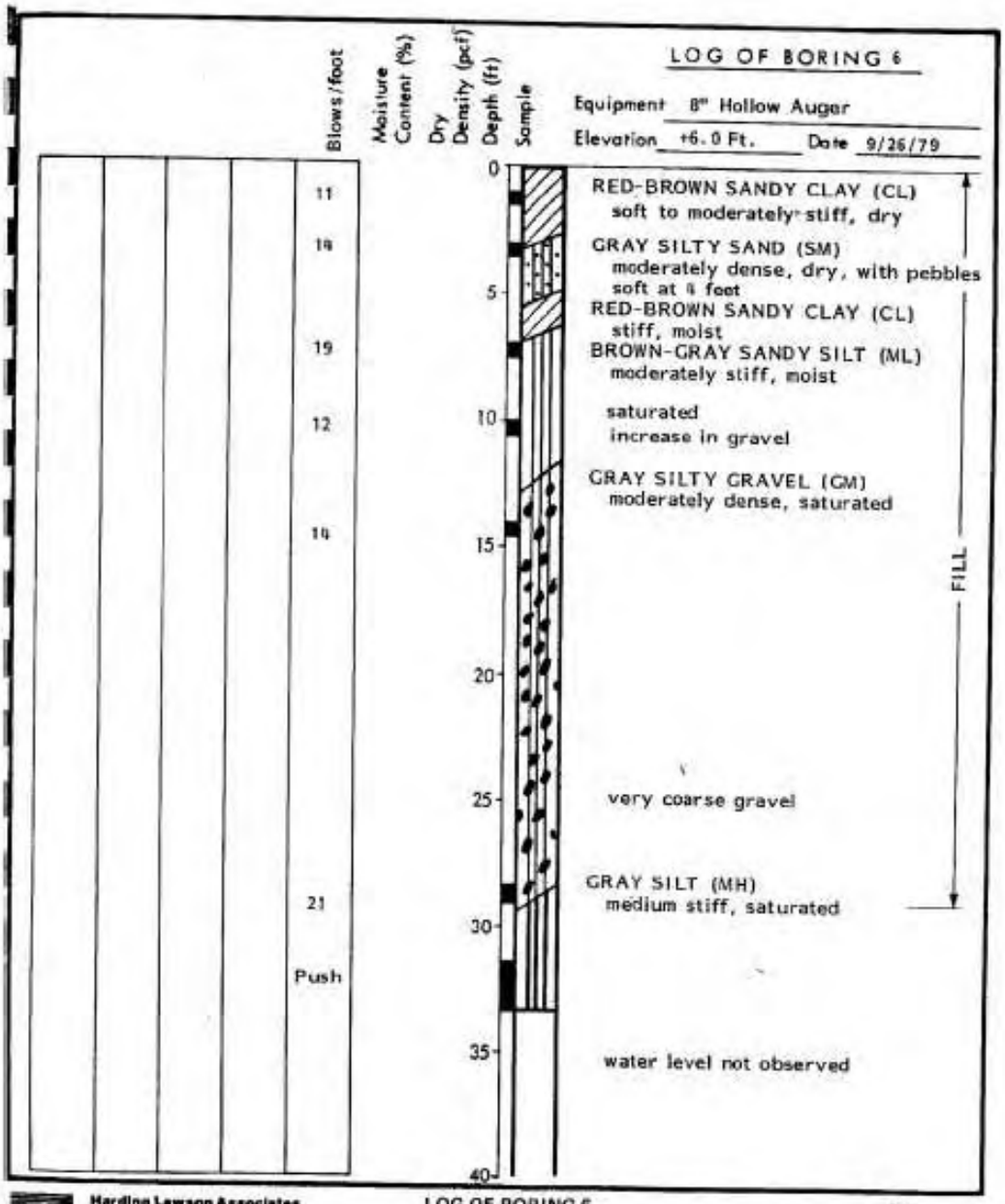

Harding Lawson Associates
Engineers Geologists & Geophysicists

LOG OF BORING 6
Federal Ornamental Building
Sausalito, California

PLATE 8

DRAWN P. Anderson | JOB NUMBER 2830,017.01 | APPROVED KHB | DATE 12/3/81

Modified from Harding Lawson and Associates (1981)

DCM GEOENGINEERS

WEST YOST ASSOCIATES
City of Sausalito
Priority 1 Sewer Replacement
Sausalito, California

REFERENCE BORING RB-3

PLATE NO. D-3

FILE NO. 18337-001-00 | AUGUST 2009

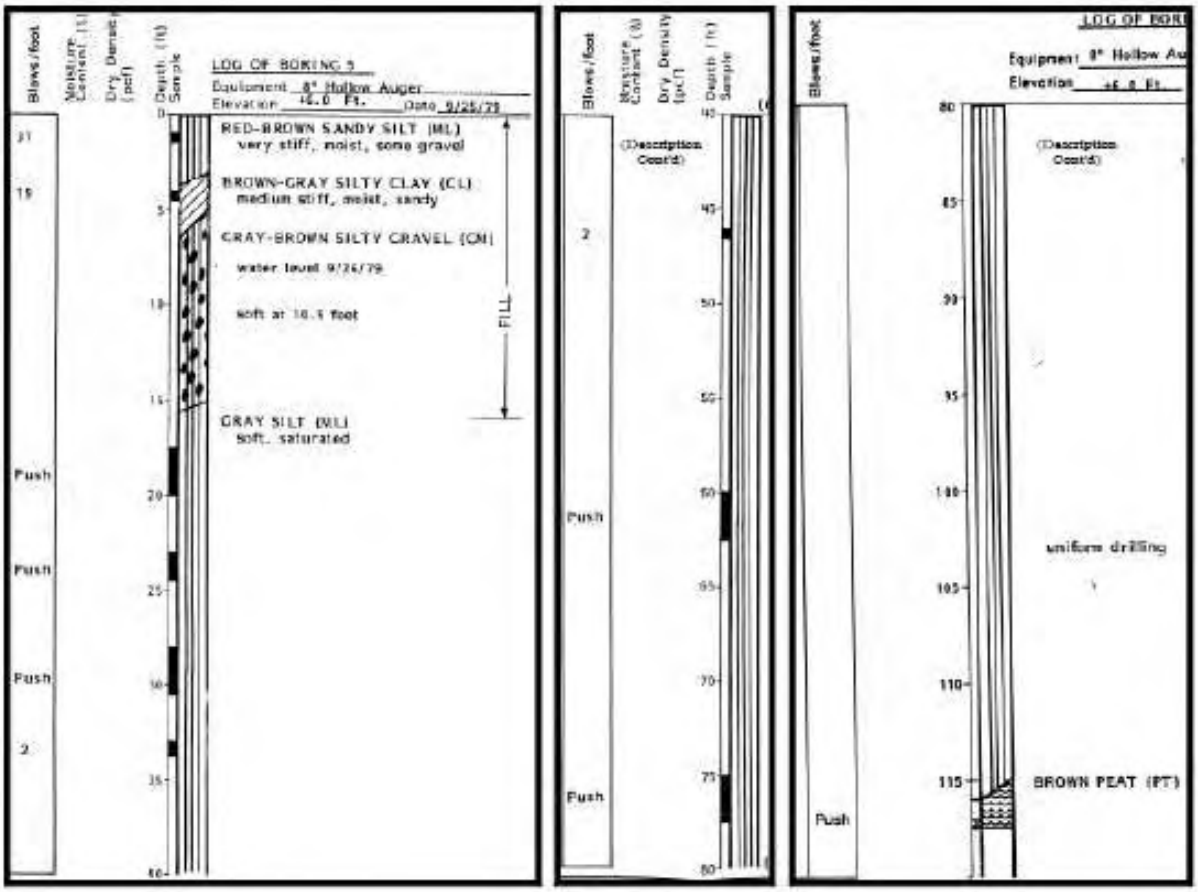

Modified from Harding Lawson and Associates (1981)

DCM GEOENGINEERS

FILE NO. 18337-001-00 | AUGUST 2009

WEST YOST ASSOCIATES

City of Sausalito
Priority 1 Sewer Replacement
Sausalito, California

REFERENCE BORING RB-4

PLATE NO.

D-4

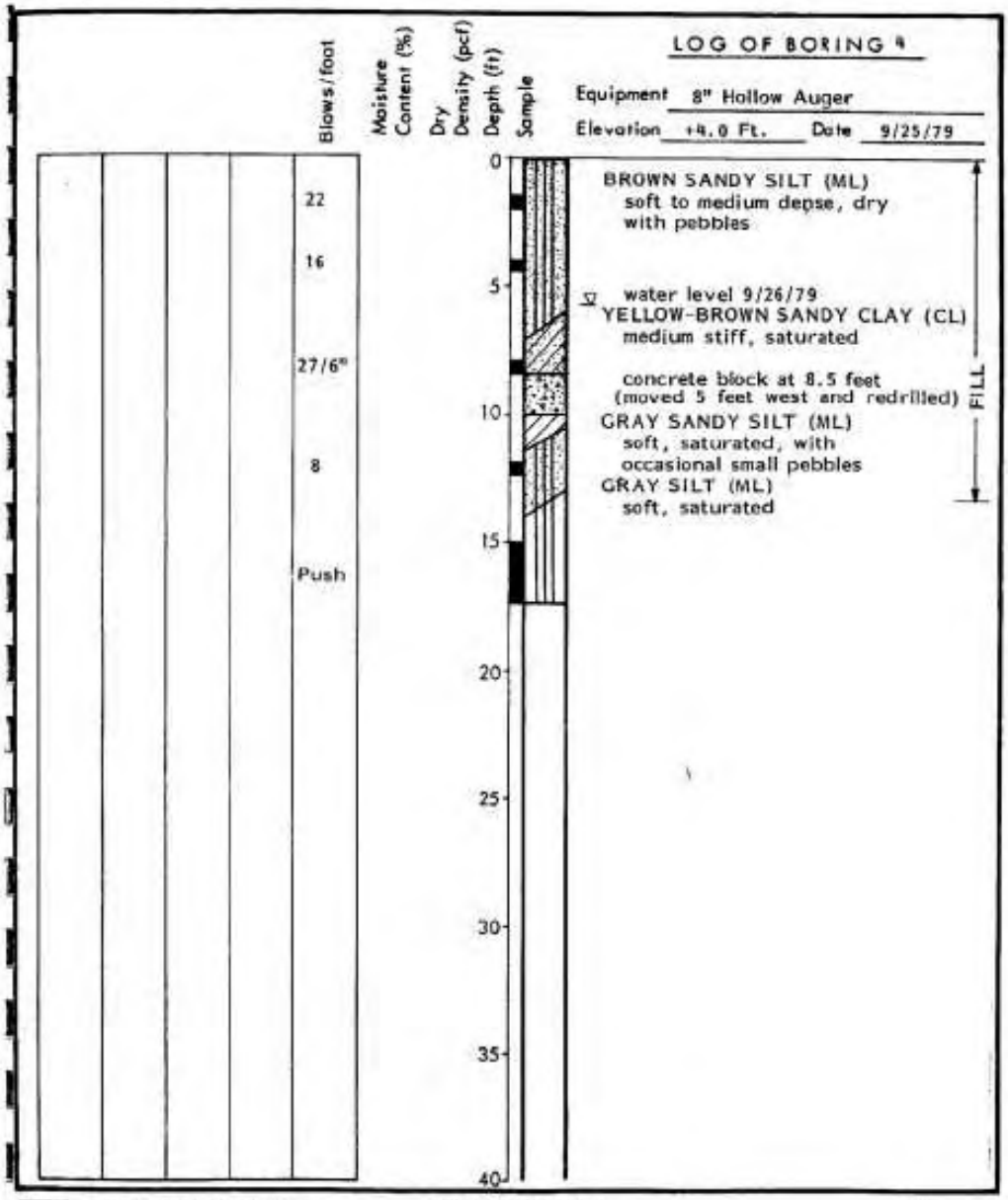

Modified from Harding Lawson and Associates (1981)

DCM GEOENGINEERS

FILE NO. 18337-001-00 | AUGUST 2009

WEST YOST ASSOCIATES

City of Sausalito
Priority 1 Sewer Replacement
Sausalito, California

REFERENCE BORING RB-5

PLATE NO.

D-5

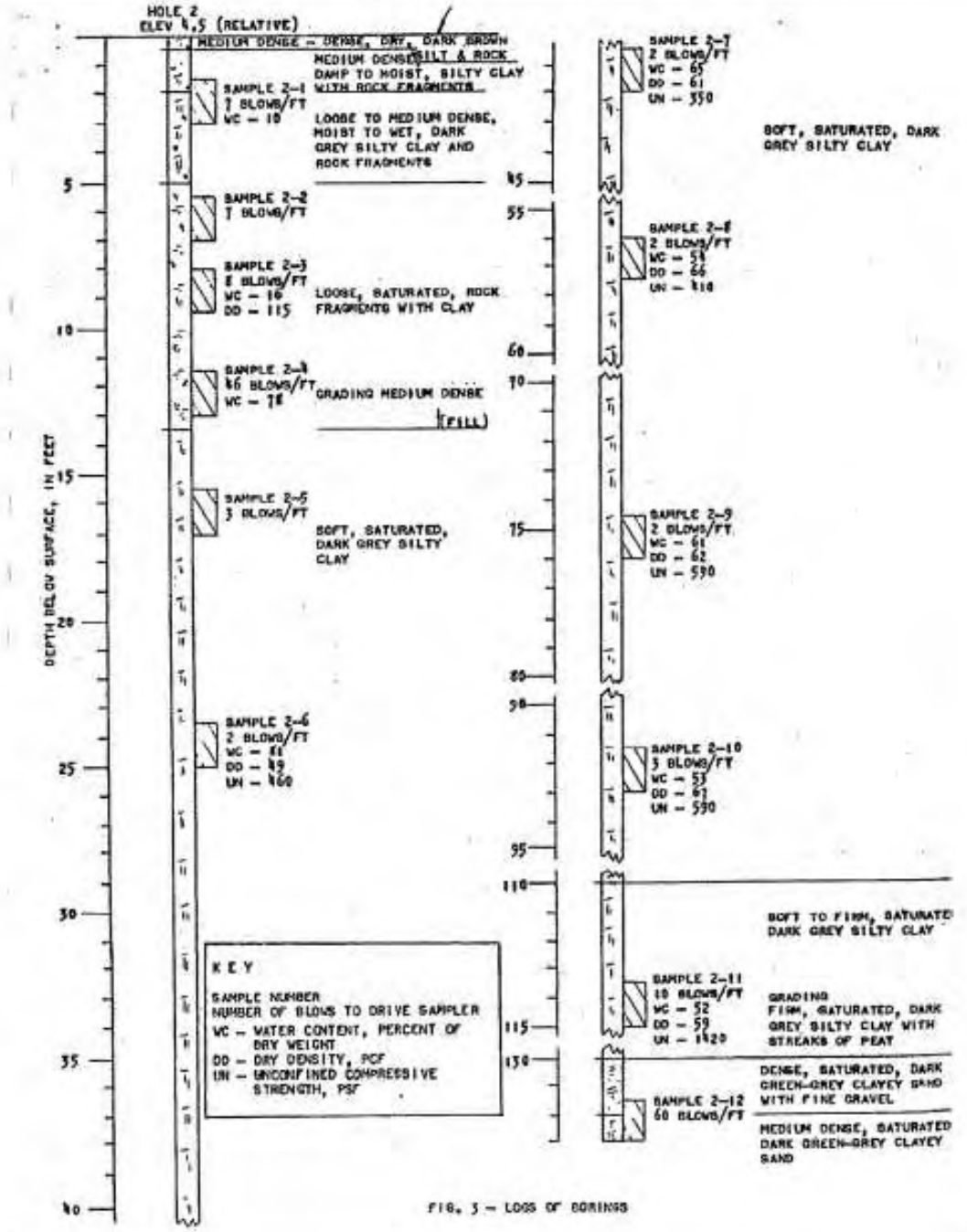

FIG. 3 – LOGS OF BORINGS

Modified from Woodward-Clyde-Sherard & Associates (1959)

DCM GEOENGINEERS

FILE NO. 18337-001-00 | AUGUST 2009

WEST YOST ASSOCIATES
City of Sausalito
Priority 1 Sewer Replacement
Sausalito, California

REFERENCE BORING RB-6

PLATE NO.
D-6

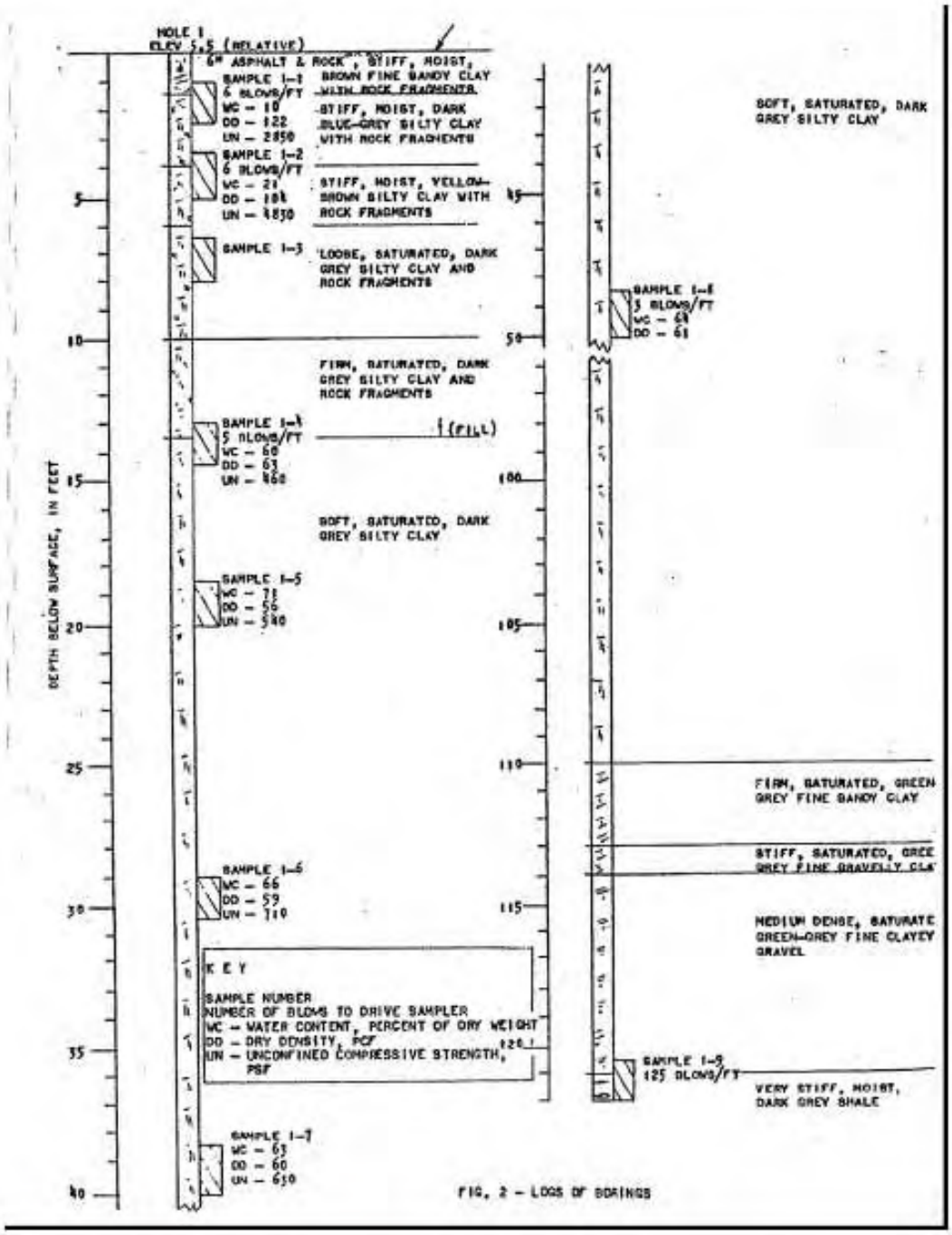

Modified from Woodward-Clyde Consultants (1959)

DCM | GEOENGINEERS

FILE NO. 18337-001-00 | AUGUST 2009

WEST YOST ASSOCIATES
City of Sausalito
Priority 1 Sewer Replacement
Sausalito, California

REFERENCE BORING RB-7

PLATE NO.
D-7

Project: CLIPPER YACHT HARBOR
Sausalito, California

Log of Boring No. 3

Date Drilled: January 12, 1984
Type of Boring: 5" Auger
Hammer Weight: 140 lbs.
Remarks:
(See Legend Sheet for sampler types and hammer weights)

Surface Elevation:

Depth, Ft.	Samples	Blows/Ft.	MATERIAL DESCRIPTION	Moisture Content, %	Dry Density, pcf	Unconfined Compressive Strength, psf
			ASPHALT			
			CLAYEY SANDY GRAVEL (GC): Medium dense to dense, moist, gray (ATD)			
			Varying sand and gravel content, saturated, gravel to 2" in diameter			
5	1	5	SILTY CLAY (CL) Soft, brown and blue-gray mottled	16	117	608
			Becomes gravelly			
			SANDY GRAVELLY CLAY (CL) Soft to medium stiff, tan			
	2	16	SILTY CLAY (CL): Medium stiff, green-gray	10	131	2382
10			GRAVELLY CLAY (CL) Stiff, red-brown to light brown			
			Gravel to 1" in diameter			
			SILTY CLAY (CL/CH) Soft to medium stiff, gray, (Bay Mud)			
15	3	8	CLAYEY GRAVEL (GC) Loose to medium dense, gray, gravel to 1" in diameter			
			Varying clay content			
20						
			SILTY CLAY (CL/CH) Soft, gray, (Bay Mud)			
25						
			BOTTOM OF BORING @ 26'			
30						

Proj. No. 16155A | Woodward-Cly | Figure 4

Modified from Woodward-Clyde Consultants (1984)

DCM GEOENGINEERS

WEST YOST ASSOCIATES
City of Sausalito
Priority 1 Sewer Replacement
Sausalito, California

REFERENCE BORING RB-8

PLATE NO. D-8

FILE NO. 18337-001-00 | AUGUST 2009

APPENDIX F

Groundwater and Soil Contamination Study

FINAL ENVIRONMENTAL SITE CHARACTERIZATION REPORT
GATE 5 ROAD SEWER REHABILITATION
SAUSALITO, CALIFONIA

Submitted to:

City of Sausalito

April 14, 2016

Submitted by:

AEW Engineering, Inc.
55 New Montgomery Street, Suite 722
San Francisco, California 94105
www.aewengineering.com

Version 1

FINAL ENVIRONMENTAL SITE CHARACTERIZATION REPORT
GATE 5 ROAD SEWER REHABILITATION
SAUSALITO, CALIFORNIA

APRIL 14, 2016

Submitted to:
City of Sausalito

Submitted By:
AEW Engineering, Inc.
55 New Montgomery Street, Suite 722
San Francisco, CA 94105
www.aewengineering.com

Version 1

LIST OF COMMON ACRONYMS

AEW	AEW Engineering, Inc., San Francisco, California
bgs	Below existing ground surface
BTEX	Benzene/Toluene/Ethylene/Xylenes
CHHSLs	California Human Health Screening Levels, September 2010
ESLs	California Regional Water Quality Control Board – San Francisco Region's Environmental Screening Criteria, December 2013
MTBE	Methyl tert-Butyl Ether
mg/Kg	Milligrams per Kilogram
mg/L	Milligrams per liter
RSL	United States Environmental Protection Agency's Regional Screening Levels, May 2014
STLC	California Soluble Threshold Limit Concentration
SVOCs	Semi-Volatile Organic Compounds
TCLP	United States Environmental Protection Agency's Toxicity Characteristic Leaching Procedure
Title-22 Metals	17 Metals listed in Title 22 of the California Code of Regulations: Sb=Antimony; As=Arsenic; Ba=Barium; Be=Beryllium; Cd=Cadmium; Cr=Chromium; Cr+6=Chromium VI; Co=Cobalt; Cu=Copper; Pb=Lead; Hg=Mercury; Mo=Molybdenum; Ni=Nickel; Se=Selenium; Ag=Silver; Tl=Thallium; V=Vanadium; and Zn=Zinc.
TPHs	Total Petroleum Hydrocarbons
TPHs-G	TPHs as Gasoline
TPHs-D	TPHs as Diesel
TPHs-MO	THPs as Motor Oil
TTLC	California Total Threshold Limit Concentration
USEPA	United States Environmental Protection Agency
VOCs	Volatile Organic Compounds
WET	California Waste Extraction Test
µg/Kg	Micrograms per Kilogram
µg/L	Micrograms per Liter

TABLE OF CONTENTS

1 INTRODUCTION 1-1

1.1 Site Description and Background 1-1

1.2 Previous Investigations 1-1

1.3 Site Characterization Objectives 1-1

1.4 Report Organization 1-2

2 FIELD SAMPLING PROTOCOLS 2-1

2.1 Permits and Utility Clearance 2-1

2.2 Sampling Protocols 2-1

2.2.1 Soil Sampling 2-1

2.3 Groundwater Sampling Protocol 2-2

2.4 Chain of Custody Documentation 2-3

2.5 Sampling Shipment 2-4

2.6 Equipment Decontamination 2-4

3 LABORATORY ANALYSES PROTOCOL 3-1

3.1 Soil Samples 3-1

3.2 Groundwater Samples 3-1

3.3 Laboratory QA/QC Procedures 3-1

4 RESULTS OF SITE CHARACTERIZATION 4-1

4.1 Site Geology and Hydrogeology 4-1

4.2 Data Validation and Reporting 4-1

4.3 Results of Chemical Analysis- Soil Samples 4-2

4.3.1 Soil Analytical Result Evaluation Criteria 4-2

4.3.2 Results – Soil Samples 4-4

4.3.3 Potential Waste Classification and Disposal of To-be Excavated Soil 4-7

4.4 Results of Chemical Analyses – Groundwater Samples 4-7

4.4.1 Groundwater Analytical Result Evaluation Criteria 4-7
4.4.2 Results – Groundwater Samples 4-8
4.5 Human Health and Environmental Risk Evaluation 4-9

5 CONCLUSIONS AND RECOMMENDATIONS 5-1
5.1 Conclusions 5-1
5.1.1 Human Health and Environmental Risk Evaluation 5-1
5.1.2 Potential Waste Classification and Disposal of To-be Excavated Soil 5-2
5.1.3 Dewatered Groundwater Discharge During Construction 5-2
5.2 Recommendations 5-2

6 REPORT LIMITATIONS 6-1

7 REFERENCES 7-1

LIST OF TABLES

TABLE 1 LIST OF CHEMICAL ANALYSES ON SOIL AND GROUNDWATER SAMPLES

TABLE 2 RESULTS OF TOTAL PETROLEUM HYDROCARBONS, BTEX, MTBE, VOCS, AND PCBS ANALYSES ON SOIL SAMPLES

TABLE 3 RESULTS OF SEMI-VOLATILE ORGANIC COMPOUNDS ANALYSES ON SOIL SAMPLES

TABLE 4 RESULTS OF TITLE 22 METALS ANALYSES ON SOIL SAMPLES

TABLE 5 RESULTS OF TOTAL PETROLEUM HYDROCARBONS, VOCS, SVOCS, PESTICIDES, AND PCBS ANALYSES ON GROUNDWATER SAMPLES

TABLE 6 RESULTS OF TITLE 22 METALS ANALYSES ON GROUNDWATER SAMPLES

TABLE 7 RESULTS OF TSS, COD, AND PH ANALYSES ON GROUNDWATER SAMPLES

LIST OF FIGURES

FIGURE 1 SITE LOCATION MAP

FIGURE 2 SOIL AND GROUNDWATER SAMPLING LOCATIONS

LIST OF APPENDICES

APPENDIX A DRILLING PERMITS

APPENDIX B BORING LOGS

APPENDIX C LABORATORY REPORTS

1 INTRODUCTION

This Environmental Site Characterization Report (Report) presents the results of the soil and groundwater characterization conducted by AEW Engineering Inc. (AEW) in February 2016 (Site Characterization) for the City of Sausalito's Gate 5 Road Sewer Rehabilitation project (the Project). The Project is located along Gate 5 Road and extends from Coloma Street on the north end to Harbor Drive at the south end. Additional extensions of the Project include a portion of Gate 5 Road north of the intersection of Coloma Street and Gate 5 Road and a portion of Coloma Street west of Gate 5 Road within the City of Sausalito, California (the Site). The approximate location of the Project is shown on Figure 1.

1.1 SITE DESCRIPTION AND BACKGROUND

According V. W. Housen & Associates (the Associates), the Gate 5 Road rehabilitation project will replace approximately 2,400 linear feet of 6- and 8-inch diameter sewer pipe with new 8-inch diameter pipe. The Project is mainly located (1) along Gate 5 Road between Harbor Drive and Coloma Street, (2) within a parking lot adjacent to Coloma Street at Gate 5 Road, and (3) on Harbor Drive near Gate 5 Road. Construction will be completed primarily using open trench excavation methods. Manholes and lower laterals will also be replaced as part of this project. According to the Associates, the purpose of the project is to reduce groundwater infiltration and inflow, including tidal infiltration that enters the pipelines on a continuous basis, and increases during high tide events.

According to the City of Sausalito and the Associates, the maximum vertical depth of the excavation may be 15 feet below ground surface (bgs).

1.2 PREVIOUS INVESTIGATIONS

According to the City of Sausalito and the Associates, no known previous environmental investigations were conducted within or near the project area.

1.3 SITE CHARACTERIZATION OBJECTIVES

The primary objectives of the Site Characterization are:

- Evaluating general chemical conditions of subsurface soil and groundwater along the project alignment;
- Evaluating waste classification of the to-be excavated soil (TBE Soil) for off-site disposal consideration; and
- Evaluating groundwater for potential discharge to the sewer system if dewatering is warranted during construction.

1.4 REPORT ORGANIZATION

The remainder of this report is organized into the following sections:

- Section 2 - Field Sampling Protocols describing the sampling method, equipment, chain-of-custody documentation, and sample shipment employed for this Site Characterization;
- Section 3 - Laboratory Analysis Protocols describing the analyses, including methods performed on the soil and grab groundwater samples;
- Section 4 – Results of the Site Characterization describing the results of chemical analyses performed on soil and grab groundwater samples;
- Section 5 – Conclusions and Recommendations presenting the conclusions and recommendations derived from the results of this Site Characterization;
- Section 6 – Report Limitations presenting the limitations of this Report; and
- Section 7 – References presenting the references cited for this Report.

2 FIELD SAMPLING PROTOCOLS

This section presents field sampling protocols implemented during this Site Characterization. The field work activities for soil and grab groundwater sampling were conducted February 23 through February 25, 2016. Details of the field sampling conducted for soil and groundwater sample collection at the Site are presented below.

2.1 PERMITS AND UTILITY CLEARANCE

Prior to field sampling, the following permits were obtained for the field investigation:

- Marin County Community Development Agency Environmental Health Services (CDAEHS) Test Holes/Soil Borings Permit approved on February 3, 2016 (CDAEHS Permit No: TH B10435); and
- City of Sausalito Encroachment Permit (EP) approved February 18, 2016 (EP No: 16-032).

Copies of the permits are included in Appendix A. In addition, notifications were made to Underground Services Alert (USA) on February 11 and 18, 2016, over 72 hours prior to the start of the field sampling activities that were performed during this site characterization (USA Numbers: 067011, 067056, 067066, and 081952). Underground utility clearance was also performed on February 12, 2015 by a private utility subcontractor to mark and identify subsurface utilities prior to soil sampling.

2.2 SAMPLING PROTOCOLS

The field sampling activities involved collecting soil samples from fourteen soil borings (AEW-B1 through AEW-B14) and three groundwater samples from three borings; AEW-B2, AEW-B9, and AEW-B11. The approximate locations of these soil borings are shown on Figure 2. The field sampling was conducted February 23 through 25, 2016. Prior to field sampling, the locations of these soil borings were marked and concurred with by a representative from the City of Sausalito's Department of Public Works in the field on January 26, 2016. Details of the field sampling conducted during the site characterization are presented below.

2.2.1 Soil Sampling

Soil samples were collected at approximately 2.5 feet, 5 feet, 10 feet, and 15 feet bgs from each boring, as listed on Table 1, for chemical analyses. At each boring location, the boring was advanced using either a track-mounted or truck-mounted direct push drilling equipment. Soil samples were collected in 4-foot sections of 2-inch diameter acetate liners. At the designated soil sampling depth, a 0.5-foot section of the extruded acetate liner was cut to collect the respective soil sample for chemical analyses.

Immediately after sample collection, each end of the liner was covered with a Teflon sheet and secured with plastic cap. The samples were transported in a cooler with sufficient wet ice to maintain the samples at approximately 4° C until arrival at the designated laboratory for chemical analysis.

Each soil sample was labeled with a minimum of the following information:

- Unique Sample Identification in the format of B@-DD where B@=unique boring location identification, and DD=sample depth in feet below ground surface referenced at top of the sample;
- Date and time of collection;
- Samplers' initials; and
- Project number.

The samples were then placed in a cooler with double-bagged ice at approximately 4 degrees Celsius (^{o}C) for transportation to McCampbell Analytical Inc. (McCampbell), Pittsburg, California, a certified California laboratory, for chemical analyses. As indicated in the authorized scope of work on November 13, 2015, no quality assurance/quality control (QA/QC) soil samples were collected for this project. Immediately after sampling, Chain-of-Custody (COC) documentation was prepared in accordance with the procedure described in Section 2.4. In addition, a field-sampling log was prepared and contained the following information:

- Type of sampling equipment used;
- Sample appearance;
- Sample Identification; and
- Date and time of collection.

Soil not scheduled for chemical analyses was reviewed for geologic logging. A boring log was prepared for each boring during the field investigation using the Unified Soil Classification System (USCS) visual-manual procedures (ASTM D-2488-90). Copies of the boring logs are included in Appendix B.

Upon completion of sampling, any investigative derived wastes (IDW) including soil cuttings were placed in a Department of Transportation rated 55-gallon drum. The IDW drum was stored at a designated location pending receipt the results of chemical analyses.

Upon completion of the soil and groundwater sampling (details of the groundwater sampling protocols are presented in Section 2.3) at each soil boring, the borehole was backfilled with grout in accordance with the County of Marin, Community Development Agency, Environmental Health Services' requirements. Surface completion of the soil boring was restored to match the previously existing surface.

2.3 Groundwater Sampling Protocol

Grab groundwater samples were collected from three of the fourteen boring locations; AEW-B2, AEW-B9, and AEW-B11. The grab groundwater locations were selected based on their spatial distribution across the project area of the sewer upgrade and presence of groundwater in the boring.

Following the completion of the soil sampling, a temporary 1-inch diameter polyvinyl chloride plastic pipe with a slotted screen interval was lowered into the boring to facilitate the collection of groundwater at each of the three locations. Groundwater samples were then collected using a peristaltic pump outfitted with dedicated clean tubing for each location.

Grab groundwater samples were immediately decanted into clean bottles provided by the laboratory. The groundwater samples were labeled with a minimum of the following information:

- Unique Sample Identification in the format of B@GW where B@=unique location identification;
- Date and time of collection;
- Samplers' initials; and
- Project number.

The samples were then placed in a cooler with double-bagged ice at approximately 4 ^{o}C for transportation to McCampbell for chemical analyses. No QA/QC groundwater samples were collected for this project.

Immediately after sampling, COC documentation was prepared in accordance with the procedure described in Section 2.4. In addition, a field-sampling log was prepared and contained the following information:

- Type of sampling equipment used;
- Sample appearance;
- Sample Identification; and
- Date and time of collection.

2.4 Chain of Custody Documentation

COC documentation was completed by the field sampler immediately following sampling activities. The COC documentation was required and necessary to physically trace sample possession from the time of collection to its ultimate destination. The COC documentation was signed as relinquished or received each time the sample changed possession. The COC documentation, at a minimum, contained the following elements:

- Project name and number;
- Project contact and phone number;
- Name of field samplers;
- Sample identification numbers;
- Sample date and time of collection;
- Sample matrix;
- Number of containers submitted for each sample;
- Sample container type;
- Analyses requested;
- Turnaround time requested for analyses;
- Preservation of sample containers (if applicable);

- Name and address of analytical laboratory; and
- Comments if applicable.

All samples were transported with COC documentation. A copy of the COC documentation is included in Appendix C of this report.

2.5 SAMPLING SHIPMENT

The samples were shipped to McCampbell for chemical analyses. The samples were transported with COC documentation by courier to the laboratory. Prior to shipment, a copy of the COC documentation was made and maintained with the project file.

2.6 EQUIPMENT DECONTAMINATION

All down-hole drilling equipment was decontaminated between each boring location using a high pressure washer. The rinsate water was transferred into a DOT approved drum and stored at a designated location pending receipt the results of chemical analyses.

3 LABORATORY ANALYSES PROTOCOL

3.1 SOIL SAMPLES

Soil samples were submitted to McCampbell for chemical analyses. Soil samples from each sampling location were composited and analyzed at the laboratory in accordance with the composite scheme and chemical analyses as listed on Table 1.

When the results of the Title 22 metals analyses performed on soil composite samples indicated that additional analyses were required to determine whether the subsurface soil might be classified as hazardous, additional leaching tests were conducted. In general, soil composite samples were subject to additional analyses under the following conditions:

- If the concentration of any analyte in the soil composite sample is at or greater than ten times the respective California Soluble Threshold Limit Concentration (STLC) value but is below the California Total Threshold Limit Concentration (TTLC) value, the California Waste Extraction Test (WET) on the respective analyte was required to determine if the soil composite sample is to be considered as California hazardous waste; and
- If the concentration of any analyte concentration in the soil composite sample is at or greater than twenty times the respective USEPA Toxicity Characteristic Leaching Procedure (TCLP) limit, the TCLP testing on the respective analyte will be required for determining whether the soil composite sample is to be considered as federal Resource Conservation and Recovery Act (RCRA) hazardous waste.

Additional WET and TCLP leaching tests were performed for chromium and nickel as summarized in Table 1.

3.2 GROUNDWATER SAMPLES

The grab groundwater samples were submitted to McCampbell for chemical analyses in accordance with the chemical analyses as listed on Table 1.

3.3 LABORATORY QA/QC PROCEDURES

The following laboratory QA/QC elements were performed by McCampbell for each analytical method utilized on this project:

- Method Blank;
- Laboratory Control Spike;
- Laboratory Control Spike Duplicate;
- Matrix Spike; and
- Matrix Spike Duplicate.

Analytical data reports from the laboratory were reviewed for compliance with laboratory QA/QC criteria for this project. The reported laboratory QA/QC results were within acceptable control limits.

Items reviewed include holding time in the laboratory prior to extraction; and percent recovery for laboratory QC samples. Laboratory reports for these QA/QC controls are included in Appendix C of this report.

The laboratory reported date of sample extraction indicates that all samples were extracted and analyzed within their respective EPA recommended holding times. Dates of sample collection, extraction and analysis are included in the laboratory analytical reports provided in Appendix C.

4 Results of Site Characterization

4.1 Site Geology and Hydrogeology

Interpretations of the site geology and hydrogeology at the Site were developed based on the geologic and hydrogeologic information observed in the field during this investigation and the boring logs of soil borings from this site investigation. The site geology and hydrogeology were described as follows:

- The site is covered by asphalt roadway and paved parking lot surfaces. Asphalt is 2 to 6 inches thick and is underlain by 4 to 12 inches of base rock;
- The asphalt and base rock layer is underlain by artificial fill consisting of sand, gravel, and clay mixed with gravel and sand;
- In some borings, young bay mud was encountered between 10 and 16 feet bgs. In all cases, the young bay mud included gravels, sands, and occasional wood fragments that may have infiltrated from above during fill activities;
- In other borings, a gravel layer was encountered between 12 and 16 feet bgs; and
- Groundwater was encountered in the borings ranging from 5 to 13 feet bgs. Due to the proximity of the site to the San Francisco Bay, it is likely that groundwater elevation at the site is tidally influenced.

Copies of the boring logs from this investigation are presented in Appendix B.

4.2 Data Validation and Reporting

Data validation is the systematic process for reviewing a set of data against pre-established criteria to determine the quality of the data. McCampbell reviewed their data for nonconformance and consistency. Upon receipt of the analytical data package from McCampbell, the following items were evaluated and concluded by AEW:

- Data package included all requested deliverables;
- Samples were analyzed as requested;
- Sample extraction times were met;
- QC sample results were within established laboratory control limits;
- Appropriate detection limits were obtained;
- Preservation/Temperature;
- Chain of Custody;
- Sample integrity;
- Calibration criteria; and
- Quality Control method blank results.

A systematic effort was made to identify any outliers and/or errors prior to the reporting of the data. Outliers (data values that are significantly different from the population) can result from improper sampling or analytical methodology, matrix interference, errors in data transcription, and real but extreme changes in analytical parameters.

Based on the data validation, no outliers or errors were identified and that the data can be used for its intended purpose.

4.3 Results of Chemical Analysis- Soil Samples

This section presents summary of the results of chemical analyses performed on the composites of soil samples collected at the Site. Laboratory analytical reports are presented in Appendix C. Results of the chemical analyses performed on the soil samples collected during this investigation are presented in following tables:

- Table 2 for total petroleum hydrocarbons (TPHs) as gasoline, diesel and motor oil, benzene/toluene/ethylbenzene/xylenes (BTEX), methyl tert-butyl ether (MTBE), volatile organic compounds (VOCs) and polychlorinated biphenyls (PCBs);
- Table 3 for semi-volatile organic compounds (SVOCs); and
- Table 4 for California Codes of Regulations Title 22 metals (Title 22 Metals).

4.3.1 Soil Analytical Result Evaluation Criteria

Results of the chemical analyses were evaluated using the following regulatory criteria:

- **Human Health and Environment Risk Evaluation Criteria:**
  - ***California Regional Water Quality Control Board (RWQCB) – San Francisco Bay Region's Environmental Screening Levels – Tier 1, February 2016 (Tier 1 ESLs).*** This criterion is employed to evaluate whether potential contamination is present in soil at the site that may require further investigation. This criterion is employed for this evaluation because the site is located in the San Francisco Bay Area. Chemicals with concentrations below this Tier 1 ESLs are considered as not posing a significant risk of adverse effects to humans and the environment, and therefore additional site investigation or remediation would not anticipate to be required for the respective chemical by the RWQCB – San Francisco Region;
  - ***RWQCB – San Francisco Bay Region's ESLs Direct Exposure Construction/Trench Worker Exposure Scenario, (Table K-3), May 2013[1].*** This criterion is employed to evaluate whether exposure of soil at each site is at risk of adverse effects to site workers during construction. Chemicals with concentrations below the respective ESLs are not considered to pose a significant risk to site workers, and therefore additional health and safety protocols may not be necessary for the

1 The February 2016 update of the RWQCB – San Francisco Bay Region's ESLs does not provide specific numerical ESLs for Direct Exposure Construction/Trench Worker Exposure Scenario. Therefore, the May 2013 ESLs for this scenario was used for the preliminary evaluation of the results of this site investigation for construction workers exposure.

respective chemical for worker protection. However, actual requirements of the appropriate health and safety protocols for worker protection for the chemicals in soil during the construction of the project at the site shall be evaluated, identified, and developed by the entity who will prepare and implement the site specific health and safety plans for this project;

- ***Integrated Risk Assessment Branch, Office of Environmental Health Hazard Assessment, California Environmental Protection Agency –California Human Health Screening Levels (CHHSLs) – Commercial Scenario, September 2010.*** This criterion is employed to evaluate whether exposure of chemicals in soil at each site is at risk of adverse effects to human health. Concentrations below the CHHSL are not considered to pose a significant human health risk based on a commercial/industrial scenario;
- ***California Environmental Protection Agency, Department of Toxic Substances Control's modified screen levels (DTSC-SLs) for soil, Commercial/Industrial, October 2015.*** This criterion is employed to evaluate whether exposure to chemicals in soil at the Site would potentially result in risk of adverse effects to human health. Concentrations below the respective DTSC-SL are not considered to pose a significant human-health risk based on the commercial/industrial scenario; and
- ***United States Environmental Protection Agency Regional Screening Levels (RSLs) for Industrial for Chemical Contaminants at Superfund Sites, November 2015.*** This criterion is employed to evaluate whether exposure to chemicals in soil at the Site would potentially result in risk of adverse effects to human health. They are risk-based concentrations derived from standardized equations combining exposure information and assumptions with USEPA toxicity data. RSLs are considered by USEPA to be protective for humans (including sensitive groups) over a lifetime.

- **Potential Waste Classification Evaluation Criteria:**
  - ***California Total Threshold Limit Concentrations (TTLCs)***. Soil with concentration of any analyte exceeding the corresponding TTLC value is considered as a minimum as California Class I non-Resource Conservation and Recovery Act (non-RCRA) hazardous material for disposal purposes;
  - ***California Soluble Threshold Limit Concentrations (STLCs)***. Soil with soluble concentrations of any analyte, as determined by California's Waste Extraction Test (WET), exceeding the corresponding STLCs value is considered as a minimum as California Class I non-RCRA hazardous material for disposal purposes;
  - ***Ten Times STLCs***. Soil with a total concentration of any analyte above the corresponding ten times STLC is considered as potentially hazardous and would require WET to be conducted on the respective analyte to determine whether it is considered as a California Class I non-RCRA hazardous material for disposal purposes;

- ***Twenty Times United States Environmental Protection Agency's (USEPA's) Toxicity Characteristics Leaching Procedure Limits (TCLPs)***. Soil with a total concentration of any analyte above twenty times over the corresponding TCLP is considered as potentially hazardous and would require TCLP to be conducted on the respective analyte to determine whether it is considered as a federal RCRA hazardous material for disposal purposes; and
- ***TCLPs***. Soil with a soluble concentration of an analyte, as determined by USEPA's TCLP test, exceeding the corresponding TCLP criteria is considered as a federal RCRA hazardous material for disposal purposes.

4.3.2 Results – Soil Samples

Results of the chemical analyses performed on the soil samples collected from soil borings AEW-B1 through AEW-B14 are described below:

- ***Total Petroleum Hydrocarbons (TPHs), Benzene/Toluene/Ethylbenzene/Xylenes (BTEX), Methyl Tertiary Butyl Ether (MTBE), and Volatile organic compounds (VOCs)***. Results of the TPHs and VOCs analyses are listed in Table 2. A summary of the chemical results is described below:
  - TPHs-Gasoline was detected in soil composite samples at concentrations ranging from below the detection limit of 1 milligram per kilogram (mg/kg) to 7.4 mg/kg. None of the detected concentrations were above the respective ESLs;
  - TPHs-Diesel was detected in soil composite samples at concentrations ranging from below the detection limit of 1 mg/kg to 130 mg/kg. None of the detected concentrations were above the respective ESL;
  - TPHs-Motor Oil was detected in soil composite samples at concentrations ranging from below the detection limit of 5 mg/kg to 310 mg/kg. None of the detected concentrations were above the respective ESL;
  - No benzene or MTBE were reported in any soil composites above their respective detection limits;
  - Ethylbenzene was detected in soil composite samples at concentration ranging from below the detection limit of 0.005 mg/Kg to 0.013 mg/Kg. None of the detected concentrations were above the respective ESL;
  - Toluene was detected in soil composite samples at concentration ranging from below the detection limit of 0.005 mg/Kg to 0.0093 mg/Kg. None of the detected concentrations were above the respective ESL;
  - Total xylenes were detected in soil composite samples at concentration ranging from below the detection limit of 0.015 mg/Kg to 0.034 mg/Kg. None of the detected concentrations were above the respective ESL; and
  - With the exception of naphthalene, no other analyte of the VOCs analyses were reported above their respective detection limits in the soil composites analyzed. Naphthalene was detected in soil composite samples at concentration ranging from below the detection limit of 0.005 mg/Kg to 0.75 mg/Kg. Only one result of

naphthalene reported in composite sample: Comp AEW-B12, B14 10-15' (soil samples collected from soil boring AEW-B12 and AEW-B14 at 10 feet and 15 feet bgs) was reported at concentration above the respective Tier 1 ESL but below the ESL for construction workers.

- ***Polychlorinated Biphenyls (PCBs).*** Results of the PCBs analyses on the soil composite samples are presented in Table 2. PCBs was detected in soil composite samples at concentration ranging from below the detection limit of 0.0022 mg/Kg to 0.036 mg/Kg. None of the detected concentrations were above the respective ESL.
- ***Semi-Volatile Organic Compounds (SVOCs)***. Results of SVOCs analyses on the subsurface soil composite samples are listed in Table 3 and described below:
    - Bis (2-ethylhexyl) phthalate was detected in soil composite samples at concentrations ranging from below the detection limit of 0.13 mg/Kg to less than 2.6 mg/Kg. None of the detected concentrations were above the respective ESL;
    - Butyl benzyl phthalate was detected in soil composite samples at concentrations ranging from below the detection limit of 0.13 mg/Kg to 2.7 mg/Kg. No ESL was established for this analyte;
    - 3,3-Dichloro benzidine was detected in soil composite samples at concentrations ranging from below the detection limit of 0.12 mg/Kg to 2.8 mg/Kg. The detected concentrations were above the Tier 1 ESL but below the ESL for construction worker criteria;
    - 2,4-Dinitrophenol was detected in soil composite samples at concentrations ranging from below the detection limit of 0.13 mg/Kg to below the detection limit of 2.6 mg/Kg. Only one soil composite sample was reported to have concentration above the detection limit and the respective reported concentration was below the ESL;
    - Di-n-octyl phthalate was detected in soil composite samples at concentrations ranging from below the detection limit of 0.14 mg/Kg to 4.1 mg/Kg. No ESL was established for this analyte;
    - Naphthalene was detected in soil composite samples at concentrations ranging from below the detection limit of 0.13 mg/Kg to below the detection limit of 2.6 mg/Kg. Only one result of naphthalene reported in composite sample: Comp AEW-B12, B14 10-15' was reported at concentration above the respective Tier 1 ESL but below the ESL for construction workers; and
    - No other analytes of the SVOC analyses were reported above their respective detection limits in the soil composites analyzed.
- ***Title 22 Metals***. Results of Title 22 Metals analyses on the subsurface soil composite samples are listed in Table 4. All detected concentrations of metal analytes were reported below their respective ESLs and CHHSLs with the exception of arsenic, cobalt, and nickel. Discussions of the results of the arsenic, cobalt, and nickel in soil samples are presented below:

- Arsenic was detected at concentrations ranging from 4.9 mg/kg to 15 mg/kg which exceeded the ESL value of 0.067 mg/kg and the CHHSL value of 0.24 mg/kg for commercial scenario. Based on the following rationale, it is believed that the detected concentrations of arsenic in soil are likely representative of background concentrations of arsenic at the site and will not pose a risk to humans and the environment:
  - The spatial distribution of arsenic concentrations observed in the soil samples from the site are all within a similar magnitude suggesting that the reported concentrations are likely due to naturally-occurring arsenic at the site; and
  - According to Section 10 of the "User's Guide: Derivation and Application of Environmental Screening Levels, Interim Final 2016" by RWQCB-San Francisco Region, February 2016 (ESLs User Guide), the regional naturally-occurring background concentration of arsenic in undifferentiated urbanized flatland soils is around 11 mg/Kg. The range of arsenic observed in soil samples at the site is found to be within the general range of this arsenic background concentration. Because the range of arsenic concentrations for the samples is similar to the background concentration range cited above, it is anticipated that additional site characterization or remediation would not be required for arsenic.
- Cobalt was detected in soil samples at concentrations ranging from 12 mg/Kg to 24 mg/Kg. Only two soil composites: (Comp AEW-B1, B2 10-15' and Comp AEW-B10, B-13 10-15') were reported to have concentrations at or slightly above the respective Tier 1 ESL but below the ESL for construction workers; and
- Nickel was detected in soil samples at concentrations ranging from 40 mg/Kg to 120 mg/Kg. Eight soil composites: (Comp AEW-B1, B2 2.5-5', Comp AEW-B1, B2 10-15', Comp AEW-B5, B11 2.5-5', Comp AEW-B5, B11 10-15', Comp AEW-B6, B7 2.5-5', Comp AEW-B6, B7 10-15', Comp AEW-B8, B9 10-15', and Comp AEW-B10, B13 10-15') were reported to have concentrations at or slightly above the respective Tier 1 ESL and the ESL for construction workers.

All detected concentrations of metal analytes were reported below their respective TTLC, 10 X STLCs, and 20 X TCLPs value with the exception of chromium and nickel. Results of the leaching tests for chromium and nickel performed on soil samples are presented below:

- All total concentrations of chromium in soil composites analyzed were below the TTLC. Soluble chromium analyses under WET extraction and TCLP extraction were required for 10 soil composite samples and for 3 soil composite samples, respectively (see Tables 1 and 4 for samples and results). Results of each of the WET analyses on chromium ranged from below the detection limit of 0.1 milligram per liter (mg/L) to 0.32 mg/L and were all below the respective STLC of 5 mg/L. Results of each of the TCLP analyses on chromium were all below the detection limit of 0.1 mg/L and were below the respective TCLP of 5 mg/L; and

- All total concentrations for nickel in soil composite analyzed were below the respective TTLC. Soluble nickel analysis under WET extraction was required for one soil composite sample (see Tables 1 and 4 for sample and results). The result of the WET analysis on nickel was 0.45 mg/L, which is below the respective STLC of 20 mg/L.

An evaluation was conducted on the potential risk to human and the environment based on the results of the soil and groundwater samples of this site characterization. The results of the risk evaluation are presented in Section 4.5 of this Report.

4.3.3 Potential Waste Classification and Disposal of To-be Excavated Soil

The to-be-excavated soil represented by the all analyzed soil composites is currently planned for off-site disposal at a permitted off-site disposal facility. Based on the results of the analyses on all composite soil samples during this soil investigation, the potential waste classification of to be excavated soil for disposal is considered as non-hazardous that can be disposed of to permitted California Class II or III landfill facilities.

The final waste classification will be determined by the disposal facility selected by the City of Sausalito or its contractor for off-site disposal through the review of the profile application submitted by City of Sausalito or its contractor for acceptance approval by the disposal facility.

4.4 Results of Chemical Analyses – Groundwater Samples

This section presents summary of the results of chemical analyses performed on the groundwater samples collected at the Site. Laboratory analytical reports are presented in Appendix C. Results of the chemical analyses performed on the groundwater samples collected during this investigation are presented in following tables:

- Table 5 for detected TPHs as gasoline, diesel, and motor oil, BTEX, MTBE, VOCs, SVOCs, Pesticides[2], PCBs, and Oil & Grease;
- Table 6 for California Codes of Regulations Title 22 Metals (Total and Dissolved); and
- Table 7 for total suspended solids (TSS), chemical oxygen demand (COD), and pH.

4.4.1 Groundwater Analytical Result Evaluation Criteria

Results of the chemical analyses were evaluated using the following regulatory criteria:

- **Human Health and Environment Risk Evaluation Criteria:**
  - ***California Regional Water Quality Control Board (RWQCB) – San Francisco Bay Region's Environmental Screening Levels (ESLs) – Tier 1, February 2016 (Tier 1 ESL).*** This criterion is employed to evaluate whether potential contamination is

2. Pesticides analyses on groundwater samples were not proposed for this site characterization and were not requested to be analyzed on the COC documents that were provided to the laboratory at the time of sample submittal. However, since pesticides and PCBs are generally analyzed using similar methods, the laboratory also analyzed the pesticides as well as PCBs. Therefore, results of the pesticides analyses performed on the groundwater samples are also included in this Report.

present in groundwater at the Site that may require further investigation. This criterion is employed for this evaluation because the Site is located in San Francisco Bay Area. Chemicals with concentrations below the Tier 1 ESL for groundwater are considered as not posing a significant risk of adverse effects to humans and the environment, and therefore additional site investigation or remediation would not anticipate to be required for the respective chemical by the RWQCB – San Francisco Region.

- ***Discharge to SMCSD Sewer System Evaluation Criteria.***
  - ***Discharge Limits for Non-Sanitary Wastewater Discharge in to the SMCSD (SMCSD, 1993) (SMCSD Discharge Limits).*** These criteria were used to determine if pretreatment of groundwater may be required by SMCSD prior to discharge from the site into the SMCSD sewer system.

4.4.2 Results – Groundwater Samples

Results of the chemical analyses performed on the grab groundwater samples collected from borings: AEW-B2, AEW-B9, and AEW-B11 are presented in Tables 5, 6, and 7 and summarized below.

- ***TPHs, BTEX, MTBE, Oil & Grease***. Results of the TPHs, BTEX, MTBE, and Oil & Grease analyses from the unfiltered grab groundwater samples are listed in Table 5. Results of these analyses indicated only the following analytes exceeding either the respective Tier 1 ESL or the SMCSD Discharge Limit:
  - TPHs as diesel and motor oil were reported in detectable concentrations above the Tier 1 ESL but below the SMCSD Discharge Limit in groundwater samples from borings AEW-B2, and BEW-B11. Due to high level of suspended solids detected in the groundwater samples, as presented in Table 7, the exceedances are likely due to these analytes adhering onto the colloidal or soil particles in the groundwater samples; and
  - Oil and grease was reported at detected concentration above SMCSD Discharge Limit. Based on the similar rationale described above, the exceedance is likely due to the oil and grease adhered onto the colloidal or soil particles in the groundwater samples.
- ***VOCs, SVOCs, Pesticides, and PCBs***. Results of the VOCs and SVOCs analyses performed on the unfiltered grab groundwater samples are listed in Table 5. No analytes with detected concentrations above its respective detection limit were found to exceed the Tier 1 ESL and SMCSD Discharge Limit;
- ***Title 22 Metals***. Results of Title 22 dissolved metals and total metals analyses on the both unfiltered and filtered groundwater samples are listed in analyses are listed in Table 6. A summary of the chemical results is described below:
  - ***Total Metals from Unfiltered Grab Groundwater Samples.*** Arsenic, barium, chromium, cobalt, copper, lead, mercury, molybdenum, nickel, selenium, vanadium, and zinc were found with detectable concentrations above the Tier 1 ESL and/or the SMCSD Discharge Limits; and

- ***Dissolved Metals On Filtered Grab Groundwater Samples.*** With the exception of arsenic, cobalt, molybdenum, nickel, and selenium, none of the remaining dissolved metals analytes were detected at concentrations above their respective Tier 1 ESL. None of the dissolved metals were found at concentrations above the SMCSD Discharge Limits.

Based on the results of the analyses on both unfiltered and filtered grab groundwater samples, it is believed that the elevated concentrations detected in the total metal analyses on the unfiltered groundwater samples were likely due to metals associated with colloidal particles or fine suspended solids.

- ***Total Suspended Solids (TSS), Chemical Oxygen Demand (COD), and pH***. Results of the TSS, COD, and pH on the unfiltered grab groundwater samples are listed in Table 7. A summary of the chemical results is described below:
  - TSS was reported in the three groundwater samples at concentrations ranging from 15,900 mg/L to 338,000 mg/L exceeding the respective SMCSD Discharge Limit. No Tier 1 ESL was established for TSS;
  - COD was reported in the three groundwater samples at concentrations ranging from 460 mg/L to 5,200 mg/L. These is no established Tier I ESL or SMCSD Discharge Limit for this analyte; and
  - pH was reported ranging between 6.4 to 7.46 in the three groundwater samples. The reported results were within the range of pH listed in the SMCSD Discharge Limit.

In summary, the elevated concentrations detected in the TPHs as diesel, TPHs as motor oil, oil and greases, and total metal analyses were likely due to these chemicals associated with colloidal particles or fine suspended solids; therefore, pretreatment of groundwater such as sedimentation prior to discharge to SMCSD sewer system may be required to allow separation of the suspended solids. However, SMCSD will make the final determination on the discharge requirement including pretreatment during review and approval of the discharge application to be completed and submitted by the contractor of this project.

4.5 Human Health and Environmental Risk Evaluation

Based on the results of the chemical analyses described in Section 4.3 and Section 4.4, the following analytes were reported to have concentrations found in soil samples or groundwater samples collected from this site characterization exceeding one or more of the respective regulatory criteria: RSLs, ESLs, CHHSLs, and/or DTSC-SLs for human-health and environmental risk consideration:

- Organics:
  - Soil: Naphthalene, and 3,3-Dichlorobenzidine; and
  - Groundwater: TPHs as diesel, and TPHs as motor oil.
- Title 22 Metals:
  - Soil: arsenic, cobalt, copper, and nickel; and
  - Groundwater: Title 22 metals except antimony, silver, and thallium.

Based on the following rationale, it is concluded that levels of these analytes found in soil or groundwater exceeding the above-mentioned risk evaluation criteria are not expected to pose significant adverse impacts to human health and the environment and therefore would not require additional investigation or remediation for these analytes for this project:

- Soil:
  - As presented in Section 4.3.2, it is believed that the detected concentrations of arsenic in soil are likely representative of background concentrations of arsenic at the area;
  - The surface at the area is currently capped with asphalt, concrete, or an existing structure, thereby eliminating the exposure pathway to humans under the current site use provided that the concrete/asphalt pavement is properly maintained;
  - The soil horizon represented by those results may be excavated and disposed of off-site during construction of sewer improvement project. During construction, appropriate protocols such as, but not limited to, worker protection, dust mitigation controls, and a soil management plan will be implemented for worker protection and preventing significant adverse impacts to the public and the environment; and
  - At the completion of construction, the surface of the project will remain paved and therefore eliminate exposure pathways to humans under the future planned use provided that the concrete/asphalt pavement is properly maintained.
- Groundwater:
  - Groundwater underneath the area is not currently, and in the future would not be considered as a potable water supply; and
  - For each of the detected total metals concentrations that exceeded their respective ESL for groundwater (Tier 1 ESL), only four of the dissolved concentrations were above their respective ESLs after the samples were filtered in the laboratory using 0.45-micron filter paper, indicating that the elevated concentrations detected in the total metal analyses were likely due to metals associated with colloidal particles or fine suspended solids. In general, it is considered a low potential migration of metal to the Bay via groundwater because of low mobility of metals through saturated soil.

5 Conclusions and Recommendations

5.1 Conclusions

5.1.1 Human Health and Environmental Risk Evaluation

Based on the results of the chemical analyses described in Section 4.3 and Section 4.4, the following analytes were reported to have concentrations found in soil samples or groundwater samples collected from this site characterization exceeding one or more of the respective regulatory criteria: RSLs, ESLs, CHHSLs, and/or DTSC-SLs for human-health and environmental risk consideration:

- Organics:
  - Soil: Naphthalene, and 3,3-Dichlorobenzidine; and
  - Groundwater: TPHs as diesel, and TPHs as motor oil.
- Title 22 Metals:
  - Soil: arsenic, cobalt, copper, and nickel; and
  - Groundwater: Title 22 metals except antimony, silver, and thallium.

Based on the following rationale, it is concluded that levels of these analytes found in soil or groundwater exceeding the above-mentioned risk evaluation criteria are not expected to pose significant adverse impacts to human health and the environment and therefore would not require additional investigation or remediation for these analytes for this project:

- Soil:
  - As presented in Section 4.3.2, it is believed that the detected concentrations of arsenic in soil are likely representative of background concentrations of arsenic in the area;
  - The surface at the area is currently capped with asphalt, concrete, or an existing structure, thereby eliminating the exposure pathway to humans under the current site use provided that the concrete/asphalt pavement is properly maintained;
  - The soil horizon represented by those results may be excavated and disposed of off-site during construction of sewer improvement project. During construction, appropriate protocols such as, but not limited to, worker protection, dust mitigation controls, and a soil management plan will be implemented for worker protection and preventing significant adverse impacts to the public and the environment; and
  - At the completion of construction, the surface of the project will remain paved and therefore eliminate exposure pathways to humans under the future planned use provided that the concrete/asphalt pavement is properly maintained.

- Groundwater:
  - Groundwater underneath the area is not currently, and in the future would not be considered as potable water supply; and
  - For each of the detected total metals concentrations that exceeded their respective Tier 1 ESL for groundwater, only four of the dissolved concentrations were above their respective ESLs after the samples were filtered in the laboratory using 0.45-micron filter paper, indicating that the elevated concentrations detected in the total metal analyses were likely due to metals associated with colloidal particles or fine suspended solids. In general, it is considered a low potential migration of metal to the Bay via groundwater because of low mobility of metals through saturated soil.

5.1.2 Potential Waste Classification and Disposal of To-be Excavated Soil

The to-be-excavated soil represented by the all analyzed soil composites is currently planned for off-site disposal at permitted off-site disposal facility. Based on the results of the analyses on all composite soil samples during this soil investigation, the potential waste classification of to be excavated soil for disposal is considered as non-hazardous that can be disposed of to permitted California Class II or III landfill facilities.

The final waste classification will be determined by the disposal facility selected by the City of Sausalito or its contractor for off-site disposal through the review of the profile application submitted by City of Sausalito or its contractor for acceptance approval by the disposal facility.

5.1.3 Dewatered Groundwater Discharge During Construction

The elevated concentrations detected in the TPHs as diesel, TPHs as motor oil, oil and greases, and total metal analyses were likely due to these chemicals associated with colloidal particles or fine suspended solids; therefore, pretreatment of groundwater such as sedimentation and petroleum hydrocarbons removal prior to discharge to SMCSD sewer system will be required. However, SMCSD will make the final determination on the discharge requirement including pretreatment during review and approval of the discharge application to be completed and submitted by the contractor of this project.

5.2 RECOMMENDATIONS

Based on the results of the site investigation, the following key recommendations are proposed:

- No additional site characterization or remediation on the chemicals exceeding the ESLs and CHHSLs in soil would be required for site closure in accordance with the rationale presented in Section 5.1;
- The construction contractor shall comply with proper waste classification by following applicable regulations and waste acceptance requirements by the landfill or other disposal facility as proposed by the construction contractor as well as all applicable and appropriate federal, state, and local regulations related to management, transportation, and disposal of the to-be excavated soil. Final waste classification will be subject to the acceptance and approval of the waste facility;

- The contractor shall comply with applicable federal, state, and local regulation for dust mitigation during site construction. Dust mitigation will include appropriate and applicable dust management and monitoring protocols as required by regulatory regulations and requirements as described in the contract document to the contractor; and
- To ensure the safety of personnel during construction, the contractor shall develop and implement a health and safety program to protect worker from exposures of chemicals above the applicable federal and state Occupational Safety and Health Administration's (OSHA) Permissible Exposure Limits (PELs) during site construction. Such protocols should include personal protective equipment requirements, worker decontamination procedures, air monitoring strategies to ensure that the workers are adequately protected and to comply with the appropriate and applicable requirements as described in the Contract document to the contractor for this project.

6 REPORT LIMITATIONS

This Report was prepared based on the results of the chemical analyses performed for this environmental site characterization and information currently available from the City of Sausalito and its consultants, as presented in this Report. All information presented in this Report is only valid for the chemical parameters that were analyzed as part of this environmental site characterization and shall not be applicable or valid to any chemical parameters that are not analyzed during this characterization.

If future information related to this Site indicates that any of these analytes may be present at concentrations in soil or groundwater, that site geology and hydrogeology are significantly different from the data presented in this Report, or other contaminants may be present at the Site, additional environmental and geologic investigations will be required and warranted for site environmental characterization. All information presented in this Report will be subject to change from such additional information.

The services consist of professional opinions and recommendations made in accordance with generally accepted environmental engineering principles and practices using the degree of skill and care exercised for similar projects under similar conditions by reputable and competent environmental consultants.

7 REFERENCES

Bradford et al, 1996. Reported mean concentration of the "Background Concentrations of Trace and Major Elements in California Soils." Kearney Foundation of Soil Science, March.

Harding Lawson Associates, 1994, Letter Report, Results of Soil Sampling and Analysis Waste Paint Consolidation Area, Trinity Plaza Apartments, June 29.

Lawrence Berkeley National Laboratory, 2009. Table 5 of the "Analysis of Background Distributions of Metals in the Soil at Lawrence Berkeley National Laboratory" by Diamond et al. Dated June 2002, Revised April 2009

Regional Water Quality Control Board-San Francisco Region, 2016. "User's Guide: Derivation and Application of Environmental Screening Levels, Interim Final 2016"

Shaklette and Boerngen, 1984 The estimated arithmetic mean of Western United States in Table 2 of the "Element Concentrations in Soils and Other Surficial Materials of the Conterminous United States" by Hansord T. Shacklette and Josephine G. Boerngen, U.S. Geological Survey Professional Paper 1270

TABLES

TABLE 1
LIST OF CHEMICAL ANALYSES ON SOIL AND GROUNDWATER SAMPLES
GATE 5 ROAD SEWER IMPROVEMENT PROJECT
SAUSALITO, CALIFORNIA

Laboratory ID	Sample Idenfification	Sampling Location Identification	Approx. Depth (Feet bgs)(1)	*Chemical Analyses (Note 2)*													
				TPHs-G/ BTEX/ MTBE	TPHs-D	TPHs-MO	VOCs	SVOCs	PCBs	Title-22 Metals	WET Cr	TCLP Cr	WET Ni	pH	TSS	COD	O&G
Soil Samples																	
COMP AEW-B1, B2 2.5-5'	AEW-B1-2.5	AEW-B1	2.5	√	√	√	√	√	√	√	√	NR (3)	NR	-- (3)	--	--	--
	AEW-B1-5	AEW-B1	5.0														
	AEW-B2-2.5	AEW-B2	2.5														
	AEW-B2-5	AEW-B2	5.0														
COMP AEW-B1, B2 10-15'	AEW-B1-10	AEW-B1	10.0	√	√	√	√	√	√	√	√	NR	NR	--	--	--	--
	AEW-B1-15	AEW-B1	15.0														
	AEW-B2-10	AEW-B2	10.0														
	AEW-B2-15	AEW-B2	15.0														
COMP AEW-B3, B4 2.5-5'	AEW-B3-2.5	AEW-B3	2.5	√	√	√	√	√	√	√	NR	NR	NR	--	--	--	--
	AEW-B3-5	AEW-B3	5.0														
	AEW-B4-2.5	AEW-B4	2.5														
	AEW-B4-5	AEW-B4	5.0														
COMP AEW-B3, B4 10-15'	AEW-B3-10	AEW-B3	10.0	√	√	√	√	√	√	√	NR	NR	NR	--	--	--	--
	AEW-B3-15	AEW-B3	15.0														
	AEW-B4-10	AEW-B4	10.0														
	AEW-B4-15	AEW-B4	15.0														
COMP AEW-B5, B11 2.5-5'	AEW-B5-2.5	AEW-B5	2.5	√	√	√	√	√	√	√	√	NR	NR	--	--	--	--
	AEW-B5-5	AEW-B5	5.0														
	AEW-B11-2.5	AEW-B11	2.5														
	AEW-B11-5	AEW-B11	5.0														
COMP AEW-B5, B11 10-15'	AEW-B5-10	AEW-B5	10.0	√	√	√	√	√	√	√	√	NR	NR	--	--	--	--
	AEW-B5-15	AEW-B5	15.0														
	AEW-B11-10	AEW-B11	10.0														
	AEW-B11-15	AEW-B11	15.0														
COMP AEW-B6, B7 2.5-5'	AEW-B6-2.5	AEW-B6	2.5	√	√	√	√	√	√	√	√	NR	NR	--	--	--	--
	AEW-B6-5	AEW-B6	5.0														
	AEW-B7-2.5	AEW-B7	2.5														
	AEW-B7-5	AEW-B7	5.0														
COMP AEW-B6, B7 10-15'	AEW-B6-10	AEW-B6	10.0	√	√	√	√	√	√	√	√	√	NR	--	--	--	--
	AEW-B6-15	AEW-B6	15.0														
	AEW-B7-10	AEW-B7	10.0														
	AEW-B7-15	AEW-B7	15.0														
COMP AEW-B8, B9 2.5-5'	AEW-B8-2.5	AEW-B8	2.5	√	√	√	√	√	√	√	NR	NR	NR	--	--	--	--
	AEW-B8-5	AEW-B8	5.0														
	AEW-B9-2.5	AEW-B9	2.5														
	AEW-B9-5	AEW-B9	5.0														
COMP AEW-B8, B9 10-15'	AEW-B8-10	AEW-B8	10.0	√	√	√	√	√	√	√	√	√	√	--	--	--	--
	AEW-B8-15	AEW-B8	15.0														
	AEW-B9-10	AEW-B9	10.0														
	AEW-B9-15	AEW-B9	15.0														
COMP AEW-B10, B13 2.5-5'	AEW-B10-2.5	AEW-B10	2.5	√	√	√	√	√	√	√	√	NR	NR	--	--	--	--
	AEW-B10-5	AEW-B10	5.0														
	AEW-B13-2.5	AEW-B13	2.5														
	AEW-B13-5	AEW-B13	5.0														
COMP AEW-B10, B13 10-15'	AEW-B10-10	AEW-B10	10.0	√	√	√	√	√	√	√	√	√	NR	--	--	--	--
	AEW-B10-15	AEW-B10	15.0														
	AEW-B13-10	AEW-B13	10.0														
	AEW-B13-15	AEW-B13	15.0														
COMP AEW-B12, B14 2.5-5'	AEW-B12-2.5	AEW-B12	2.5	√	√	√	√	√	√	√	NR	NR	NR	--	--	--	--
	AEW-B12-5	AEW-B12	5.0														
	AEW-B14-2.5	AEW-B14	2.5														
	AEW-B14-5	AEW-B14	5.0														
COMP AEW-B12, B14 10-15'	AEW-B12-10	AEW-B12	10.0	√	√	√	√	√	√	√	√	NR	NR	--	--	--	--
	AEW-B12-15	AEW-B12	15.0														
	AEW-B14-10	AEW-B14	10.0														
	AEW-B14-15	AEW-B14	15.0														
Groundwater																	
AEW-B2 GW	AEW-B2-GW	AEW-B2	GW	√	√	√	√	√	√	√ (4)	--	--	--	√	√	√	√
AEW-B9 GW	AEW-B9-GW	AEW-B9	GW	√	√	√	√	√	√	√ (4)	--	--	--	√	√	√	√
AEW-B11 GW	AEW-B11-GW	AEW-B11	GW	√	√	√	√	√	√	√ (4)	--	--	--	√	√	√	√

Notes :

1. bgs = below existing ground surface.
2. TPHs-G = Total Petroleum Hydrocarbons (TPHs) as Gasoline by United States Environmental Protection Agency (USEPA) Method 8015 modified.
   BTEX/MTBE = Benzene, Toluene, Ethylbenzene and Xylenes; and Methyl tert-Butyl Ether by USEPA Method 8020.
   TPHs-D and TPHs-MO = TPHs as Diesel and TPHs as Motor Oil by USEPA Method 8015 modified with silica gel cleanup.
   VOCs = Volatile Organic Compounds by USEPA Method 8260.
   SVOCs = Semi-Volatile Organic Compounds by USEPA Method 8270.
   PCBs = Polychlorinated Biphenyls by USEPA Method 8080 series.
   Title-22 Metals = 17 Metals as listed in Title 22 of the California Code of Regulations by USEPA Methods 6000/7000 series.
   Sb=Antimony, As=arsenic, Ba=Barium, Be=Beryllium, Cd=Cadmium, Cr=Chromium, Cr+6=Chromium VI, and Co=Cobalt.
   Cu=Copper, Pb=Lead, Hg=Mercury, Mo=Molybdenum, Ni=Nickel, Se=Selenium, Ag=Silver, Tl=Thallium, V=Vanadium; and Zn=Zinc.
   pH = pH analyses by USEPA Method 9045D.
   TSS = Total suspended soilds by Standard Methods 2540D.
   COD = Chemical oxygen deman by Standard Methods 5220D.
   O&G = Total recoverable oil and grease by USEPA Method 1664.
3. - - = Not Analyzed, NR = Not Required.
4. Analyses to be conducted on both unfiltered and filtered grab groundwater samples. Filteration will be performed either on-site or at the laboratory immediately upon receipt of samples using 0.45 micron filter

TABLE 2
RESULTS OF TOTAL PETROLEUM HYDROCARBONS, BTEX, MTBE, VOCs, AND PCBs ANALYSES ON SOIL SAMPLES
GATE 5 ROAD SEWER IMPROVEMENT PROJECT
SAUSALITO, CALIFORNIA

				Total Petroleum Hydrocarbons, BTEX, and MTBE (1)								*VOCs (1)*		*PCBs (1)*	
				TPHs-G	TPHs-D	TPHs-MO	Benzene	Ethyl Benzene	Toluene	Total Xylenes	MTBE	*Naphthalene*	*Other VOCs*	*Aroclor 1254*	*Total PCBs*
			Unit (2)	mg/Kg	mg/Kg	mg/Kg	mg/Kg	mg/Kg	mg/Kg	mg/Kg	mg/Kg	mg/Kg	mg/Kg	mg/Kg	mg/Kg
Risk Regulatory Criteria (3)															
			USEPA RSL - Industrial	NA	NA	NA	5.1	25	47000	2500	210	NA	NA	NA	NA
			ESL (Tier 1 Soil)	100	230	5100	0.044	1.4	2.9	2.3	0.023	0.023	NA	0.25	0.25
			ESL - Construction Workers	2800	900	31000	26	510	4200	2400	3900	78	NA	NA	NA
			DTSC's SLs - Commerical	NA	NA	NA	4.7	NA	5400	NA	NA	NA	NA	NA	NA
			CHHSLs - Commerical	NA	NA	NA	NA	NA	NA	NA	NA	NA	NA	NA	0.3
				See Note 6 for Assumptions on Statistical Evaluation											
Laboratory ID	**Sample Idenfification**	**Sampling Location Identification**	**Approx. Depth (Feet bgs)(1)**	**Min: <1 Max: 7.4 Ave: 2**	**Min: <1 Max: 130 Ave: 32.1**	**Min: <5 Max: 310 Ave: 108.2**	**Min: <0.005 Max: <0.005 Ave: 0.005**	**Min: <0.005 Max: 0.013 Ave: 0.006**	**Min: <0.005 Max: 0.0093 Ave: 0.005**	**Min: <0.015 Max: 0.034 Ave: 0.02**	**Min: <0.05 Max: <0.05 Ave: 0.05**	**Min: <0.005 Max: 0.75 Ave: 0.06**	**Not Applicable**	**Min: <0.0022 Max: 0.036 Ave: 0.005**	**Not Applicable**
Soil Samples (5)															
COMP AEW-B1, B2 2.5-5'	AEW-B1-2.5	AEW-B1	2.5	<1.0	***1.3***	***15***	<0.0050	<0.0050	<0.0050	<0.015	<0.050	<0.0050	ND	<0.0022	<0.033
	AEW-B1-5	AEW-B1	5												
	AEW-B2-2.5	AEW-B2	2.5												
	AEW-B2-5	AEW-B2	5												
COMP AEW-B1, B2 10-15'	AEW-B1-10	AEW-B1	10	***2.9***	***130***	***280***	<0.0050	<0.0050	<0.0050	<0.015	<0.050	<0.0050	ND	***0.036***	***0.036***
	AEW-B1-15	AEW-B1	15												
	AEW-B2-10	AEW-B2	10												
	AEW-B2-15	AEW-B2	15												
COMP AEW-B3, B4 2.5-5'	AEW-B3-2.5	AEW-B3	2.5	***2.5***	***42***	***270***	<0.0050	<0.0050	<0.0050	<0.015	<0.050	<0.0050	ND	<0.0022	<0.033
	AEW-B3-5	AEW-B3	5												
	AEW-B4-2.5	AEW-B4	2.5												
	AEW-B4-5	AEW-B4	5												
COMP AEW-B3, B4 10-15'	AEW-B3-10	AEW-B3	10	<1.0	***9.8***	***32***	<0.0050	<0.0050	<0.0050	<0.015	<0.050	<0.0050	ND	<0.0022	<0.033
	AEW-B3-15	AEW-B3	15												
	AEW-B4-10	AEW-B4	10												
	AEW-B4-15	AEW-B4	15												
COMP AEW-B5, B11 2.5-5'	AEW-B5-2.5	AEW-B5	2.5	***7.4***	***110***	***310***	<0.0050	<0.0050	<0.0050	***0.019***	<0.050	***0.025***	ND	<0.0022	<0.033
	AEW-B5-5	AEW-B5	5												
	AEW-B11-2.5	AEW-B11	2.5												
	AEW-B11-5	AEW-B11	5												

TABLE 2 (Cont'd)
RESULTS OF TOTAL PETROLEUM HYDROCARBONS, BTEX, MTBE, VOCs, AND PCBs ANALYSES ON SOIL SAMPLES
GATE 5 ROAD SEWER IMPROVEMENT PROJECT
SAUSALITO, CALIFORNIA

				Total Petroleum Hydrocarbons, BTEX, and MTBE (1)								*VOCs (1)*		*PCBs (1)*	
				TPHs-G	TPHs-D	TPHs-MO	Benzene	Ethyl Benzene	Toluene	Total Xylenes	MTBE	*Naphthalene*	*Other VOCs*	*Aroclor 1254*	*Total PCBs*
			Unit (2)	mg/Kg	mg/Kg	mg/Kg	mg/Kg	mg/Kg	mg/Kg	mg/Kg	mg/Kg	mg/Kg	mg/Kg	mg/Kg	mg/Kg
Risk Regulatory Criteria (3)															
			USEPA RSL - Industrial	NA	NA	NA	5.1	25	47000	2500	210	NA	NA	NA	NA
			ESL (Tier 1 Soil)	100	230	5100	0.044	1.4	2.9	2.3	0.023	0.023	NA	0.25	0.25
			ESL - Construction Workers	2800	900	31000	26	510	4200	2400	3900	78	NA	NA	NA
			DTSC's SLs - Commerical	NA	NA	NA	4.7	NA	5400	NA	NA	NA	NA	NA	NA
			CHHSLs - Commerical	NA	NA	NA	NA	NA	NA	NA	NA	NA	NA	NA	0.3
				See Note 6 for Assumptions on Statistical Evaluation											
Laboratory ID	**Sample Idenfification**	**Sampling Location Identification**	**Approx. Depth (Feet bgs)(1)**	**Min: <1 Max: 7.4 Ave: 2**	**Min: <1 Max: 130 Ave: 32.1**	**Min: <5 Max: 310 Ave: 108.2**	**Min: <0.005 Max: <0.005 Ave: 0.005**	**Min: <0.005 Max: 0.013 Ave: 0.006**	**Min: <0.005 Max: 0.0093 Ave: 0.005**	**Min: <0.015 Max: 0.034 Ave: 0.02**	**Min: <0.05 Max: <0.05 Ave: 0.05**	**Min: <0.005 Max: 0.75 Ave: 0.06**	**Not Applicable**	**Min: <0.0022 Max: 0.036 Ave: 0.005**	**Not Applicable**
Soil Samples (5)															
COMP AEW-B5, B11 10-15'	AEW-B5-10	AEW-B5	10	<1.0	<1.0	<5.0	<0.0050	<0.0050	<0.0050	<0.015	<0.050	<0.0050	ND	<0.0022	<0.033
	AEW-B5-15	AEW-B5	15												
	AEW-B11-10	AEW-B11	10												
	AEW-B11-15	AEW-B11	15												
COMP AEW-B6, B7 2.5-5'	AEW-B6-2.5	AEW-B6	2.5	***1.2***	***3.3***	***66***	<0.0050	<0.0050	<0.0050	<0.015	<0.050	<0.0050	ND	<0.0022	<0.033
	AEW-B6-5	AEW-B6	5												
	AEW-B7-2.5	AEW-B7	2.5												
	AEW-B7-5	AEW-B7	5												
COMP AEW-B6, B7 10-15'	AEW-B6-10	AEW-B6	10	<1.0	***1.6***	***6.5***	<0.0050	<0.0050	<0.0050	<0.015	<0.050	<0.0050	ND	<0.0022	<0.033
	AEW-B6-15	AEW-B6	15												
	AEW-B7-10	AEW-B7	10												
	AEW-B7-15	AEW-B7	15												
COMP AEW-B8, B9 2.5-5'	AEW-B8-2.5	AEW-B8	2.5	<1.0	***56***	***150***	<0.0050	<0.0050	<0.0050	<0.015	<0.050	<0.0050	ND	<0.0022	<0.033
	AEW-B8-5	AEW-B8	5												
	AEW-B9-2.5	AEW-B9	2.5												
	AEW-B9-5	AEW-B9	5												
COMP AEW-B8, B9 10-15'	AEW-B8-10	AEW-B8	10	<1.0	<1.0	***5.3***	<0.0050	<0.0050	<0.0050	<0.015	<0.050	<0.0050	ND	<0.0022	<0.033
	AEW-B8-15	AEW-B8	15												
	AEW-B9-10	AEW-B9	10												
	AEW-B9-15	AEW-B9	15												
COMP AEW-B10, B13 2.5-5'	AEW-B10-2.5	AEW-B10	2.5	***1.3***	***84***	***310***	<0.0050	<0.0050	<0.0050	<0.015	<0.050	<0.0050	ND	<0.0022	<0.033
	AEW-B10-5	AEW-B10	5												
	AEW-B13-2.5	AEW-B13	2.5												
	AEW-B13-5	AEW-B13	5												

TABLE 2 (Cont'd)
RESULTS OF TOTAL PETROLEUM HYDROCARBONS, BTEX, MTBE, VOCs, AND PCBs ANALYSES ON SOIL SAMPLES
GATE 5 ROAD SEWER IMPROVEMENT PROJECT
SAUSALITO, CALIFORNIA

				Total Petroleum Hydrocarbons, BTEX, and MTBE (1)								*VOCs (1)*		*PCBs (1)*	
				TPHs-G	TPHs-D	TPHs-MO	Benzene	Ethyl Benzene	Toluene	Total Xylenes	MTBE	*Naphthalene*	*Other VOCs*	*Aroclor 1254*	*Total PCBs*
			Unit (2)	mg/Kg	mg/Kg	mg/Kg	mg/Kg	mg/Kg	mg/Kg	mg/Kg	mg/Kg	mg/Kg	mg/Kg	mg/Kg	mg/Kg
Risk Regulatory Criteria (3)															
			USEPA RSL - Industrial	NA	NA	NA	5.1	25	47000	2500	210	NA	NA	NA	NA
			ESL (Tier 1 Soil)	100	230	5100	0.044	1.4	2.9	2.3	0.023	0.023	NA	0.25	0.25
			ESL - Construction Workers	2800	900	31000	26	510	4200	2400	3900	78	NA	NA	NA
			DTSC's SLs - Commerical	NA	NA	NA	4.7	NA	5400	NA	NA	NA	NA	NA	NA
			CHHSLs - Commerical	NA	NA	NA	NA	NA	NA	NA	NA	NA	NA	NA	0.3
				See Note 6 for Assumptions on Statistical Evaluation											
Laboratory ID	**Sample Idenfification**	**Sampling Location Identification**	**Approx. Depth (Feet bgs)(1)**	**Min: <1 Max: 7.4 Ave: 2**	**Min: <1 Max: 130 Ave: 32.1**	**Min: <5 Max: 310 Ave: 108.2**	**Min: <0.005 Max: <0.005 Ave: 0.005**	**Min: <0.005 Max: 0.013 Ave: 0.006**	**Min: <0.005 Max: 0.0093 Ave: 0.005**	**Min: <0.015 Max: 0.034 Ave: 0.02**	**Min: <0.05 Max: <0.05 Ave: 0.05**	**Min: <0.005 Max: 0.75 Ave: 0.06**	**Not Applicable**	**Min: <0.0022 Max: 0.036 Ave: 0.005**	**Not Applicable**
Soil Samples (5)															
COMP AEW-B10, B13 10-15'	AEW-B10-10	AEW-B10	10	<1.0	***3.0***	***10***	<0.0050	<0.0050	<0.0050	<0.015	<0.050	<0.0050	ND	<0.0022	<0.033
	AEW-B10-15	AEW-B10	15												
	AEW-B13-10	AEW-B13	10												
	AEW-B13-15	AEW-B13	15												
COMP AEW-B12, B14 2.5-5'	AEW-B12-2.5	AEW-B12	2.5	<1.0	***3.6***	***50***	<0.0050	<0.0050	<0.0050	<0.015	<0.050	<0.0050	ND	<0.0022	<0.033
	AEW-B12-5	AEW-B12	5												
	AEW-B14-2.5	AEW-B14	2.5												
	AEW-B14-5	AEW-B14	5												
COMP AEW-B12, B14 10-15'	AEW-B12-10	AEW-B12	10	***1.2***	***2.5***	<5.0	<0.0050	***0.013***	***0.0093***	***0.034***	<0.050	***0.75***	ND	<0.0022	<0.033
	AEW-B12-15	AEW-B12	15												
	AEW-B14-10	AEW-B14	10												
	AEW-B14-15	AEW-B14	15												

Notes :

1. TPHs-G = Total Petroleum Hydrocarbons (TPHs) as Gasoline; BTEX/MTBE = Benzene, Toluene, Ethylbenzene and Xylenes/Methyl tert-Butyl Ether;
   TPHs-D and TPHs-MO = TPHs as Diesel and TPHs as Motor Oil, VOCs = Volatile Organic Compounds, PCBs = Polychlorinated biphenyls
   bgs=below existing ground surface
2. mg/Kg = milligrams per Kilogram
3. ***Regulatory Criteria:***
   RSL - Industrial = USEPA's Regional Screening Levels under industrial scenario, January 2015.
   ESL (Tier 1 Soil) = California Regional Water Quality Control Board - Tier 1 Environmental Screening Levels (ESL for shallow soils and groundwater is a current or potential source of drinking water) under residential use scenario, February 2016;
   ESLs - Construction Worker = ESLs for Direct Exposure Soil Screening Levels Construction/Trench Worker Exposure Scenario.
   DTSC's SLs - Commerical = California Department of Toxic Substances Control - Screening Levels for commerical scenario, October 2015
   CHHSLs = California Human Health Screening Levels (CHHSLs) for commercial scenario, September 2010
4. NA = Not Available; ND = Not detected at concentrations above the respective detection limit(s).
5. ***###*** denotes the respective concentration above the detected limit
   ### denotes the respective concentration above at least one of the regulatory criteia listed above.
   Min = Minimum Concentration. Max = Maximum Concentration. Ave: Approximate Arithmetic Average Concentration (for concentration reported as below detection limit, the full detection limit was employed for the average estimation.

TABLE 3
RESULTS OF SEMI-VOLATILE ORGANIC COMPOUNDS ANALYSES ON SOIL SAMPLES
GATE 5 ROAD SEWER IMPROVEMENT PROJECT
SAUSALITO, CALIFORNIA

				Bis (2-ethylhexyl) Phthalate	Butyl benzyl Phthalate	3,3-Dichloro benzidine	2,4-Dimethyl phenol	Di-n-octyl Phthalate	Naphthalene	Other SVOCs
			Unit (1)	mg/Kg	mg/Kg	mg/Kg	mg/Kg	mg/Kg	mg/Kg	mg/Kg
Risk Regulatory Criteria (2)										
			USEPA RSL Industrial	160	1200	5.1	16000	NA (3)	17.0	NA
			ESL (Tier 1 Soil)	4	NA	0.012	0.67	NA	0.023	NA
			ESL - Construction Workers	950	NA	20	6800	NA	78	NA
			DTSC's SLs - Commerical	NA	NA	NA	NA	NA	NA	NA
			CHHSLs - Commerical	NA	NA	NA	NA	NA	NA	NA
				See Note 6 for Assumptions on Statistical Evaluation						
Laboratory ID	**Sample Idenfification**	**Sampling Location Identification**	**Approx. Depth (Feet bgs)(1)**	**Min: <0.13 Max: <2.6 Ave: 0.65**	**Min: <0.13 Max: 2.7 Ave: 0.63**	**Min: <0.12 Max: 2.8 Ave: 0.6**	**Min: <0.13 Max: <2.6 Ave: 0.9**	**Min: <0.14 Max: 4.1 Ave: 0.8**	**Min: <0.13 Max: <2.6 Ave: 0.7**	**Not Applicable**
Soil Samples (4)										
COMP AEW-B1, B2 2.5-5'	AEW-B1-2.5	AEW-B1	2.5	***0.2***	***0.15***	***0.14***	<0.13	***0.21***	<0.13	ND
	AEW-B1-5	AEW-B1	5							
	AEW-B2-2.5	AEW-B2	2.5							
	AEW-B2-5	AEW-B2	5							
COMP AEW-B1, B2 10-15'	AEW-B1-10	AEW-B1	10	***0.3***	***0.29***	***0.28***	<0.26	***0.43***	<0.26	ND
	AEW-B1-15	AEW-B1	15							
	AEW-B2-10	AEW-B2	10							
	AEW-B2-15	AEW-B2	15							
COMP AEW-B3, B4 2.5-5'	AEW-B3-2.5	AEW-B3	2.5	<2.6	***2.7***	***2.8***	<2.6	***4.1***	<2.6	ND
	AEW-B3-5	AEW-B3	5							
	AEW-B4-2.5	AEW-B4	2.5							
	AEW-B4-5	AEW-B4	5							
COMP AEW-B3, B4 10-15'	AEW-B3-10	AEW-B3	10	<0.13	<0.13	<0.12	<0.13	<0.14	<0.13	ND
	AEW-B3-15	AEW-B3	15							
	AEW-B4-10	AEW-B4	10							
	AEW-B4-15	AEW-B4	15							
COMP AEW-B5, B11 2.5-5'	AEW-B5-2.5	AEW-B5	2.5	***1.7***	***1.3***	***1.4***	<0.65	***2.1***	<0.65	ND
	AEW-B5-5	AEW-B5	5							
	AEW-B11-2.5	AEW-B11	2.5							
	AEW-B11-5	AEW-B11	5							
COMP AEW-B5, B11 10-15'	AEW-B5-10	AEW-B5	10	<0.13	<0.13	<0.12	<0.13	<0.14	<0.13	ND
	AEW-B5-15	AEW-B5	15							
	AEW-B11-10	AEW-B11	10							
	AEW-B11-15	AEW-B11	15							
COMP AEW-B6, B7 2.5-5'	AEW-B6-2.5	AEW-B6	2.5	***0.71***	***0.69***	***0.7***	<1.3	***1.0***	<1.3	ND
	AEW-B6-5	AEW-B6	5							
	AEW-B7-2.5	AEW-B7	2.5							
	AEW-B7-5	AEW-B7	5							
COMP AEW-B6, B7 10-15'	AEW-B6-10	AEW-B6	10	<0.13	<0.13	<0.12	<0.25	<0.14	<0.13	ND
	AEW-B6-15	AEW-B6	15							
	AEW-B7-10	AEW-B7	10							
	AEW-B7-15	AEW-B7	15							

TABLE 3 (Cont'd)
RESULTS OF SEMI-VOLATILE ORGANIC COMPOUNDS ANALYSES ON SOIL SAMPLES
GATE 5 ROAD SEWER IMPROVEMENT PROJECT
SAUSALITO, CALIFORNIA

				Bis (2-ethylhexyl) Phthalate	Butyl benzyl Phthalate	3,3-Dichloro benzidine	2,4-Dimethyl phenol	Di-n-octyl Phthalate	Naphthalene	Other SVOCs
			Unit (1)	mg/Kg	mg/Kg	mg/Kg	mg/Kg	mg/Kg	mg/Kg	mg/Kg
Risk Regulatory Criteria (2)										
			USEPA RSL Industrial	160	1200	5.1	16000	NA (3)	17.0	NA
			ESL (Tier 1 Soil)	4	NA	0.012	0.67	NA	0.023	NA
			ESL - Construction Workers	950	NA	20	6800	NA	78	NA
			DTSC's SLs - Commerical	NA	NA	NA	NA	NA	NA	NA
			CHHSLs - Commerical	NA	NA	NA	NA	NA	NA	NA
				See Note 6 for Assumptions on Statistical Evaluation						
Laboratory ID	Sample Idenfification	Sampling Location Identification	Approx. Depth (Feet bgs)(1)	Min: <0.13 Max: <2.6 Ave: 0.65	Min: <0.13 Max: 2.7 Ave: 0.63	Min: <0.12 Max: 2.8 Ave: 0.6	Min: <0.13 Max: <2.6 Ave: 0.9	Min: <0.14 Max: 4.1 Ave: 0.8	Min: <0.13 Max: <2.6 Ave: 0.7	Not Applicable
Soil Samples (4)										
COMP AEW-B8, B9 2.5-5'	AEW-B8-2.5	AEW-B8	2.5	<1.3	<1.3	<1.2	<2.5	<1.4	<1.3	ND
	AEW-B8-5	AEW-B8	5							
	AEW-B9-2.5	AEW-B9	2.5							
	AEW-B9-5	AEW-B9	5							
COMP AEW-B8, B9 10-15'	AEW-B8-10	AEW-B8	10	<0.13	<0.13	<0.12	<0.25	<0.14	<0.13	ND
	AEW-B8-15	AEW-B8	15							
	AEW-B9-10	AEW-B9	10							
	AEW-B9-15	AEW-B9	15							
COMP AEW-B10, B13 2.5-5'	AEW-B10-2.5	AEW-B10	2.5	<1.3	<1.3	<1.2	<2.5	<1.4	<1.3	ND
	AEW-B10-5	AEW-B10	5							
	AEW-B13-2.5	AEW-B13	2.5							
	AEW-B13-5	AEW-B13	5							
COMP AEW-B10, B13 10-15'	AEW-B10-10	AEW-B10	10	<0.13	<0.13	<0.12	<0.25	<0.14	<0.13	ND
	AEW-B10-15	AEW-B10	15							
	AEW-B13-10	AEW-B13	10							
	AEW-B13-15	AEW-B13	15							
COMP AEW-B12, B14 2.5-5'	AEW-B12-2.5	AEW-B12	2.5	<0.26	<0.26	<0.24	<0.5	<0.28	<0.26	ND
	AEW-B12-5	AEW-B12	5							
	AEW-B14-2.5	AEW-B14	2.5							
	AEW-B14-5	AEW-B14	5							
COMP AEW-B12, B14 10-15'	AEW-B12-10	AEW-B12	10	<0.13	<0.13	<0.12	***0.63***	<0.14	***0.92***	ND
	AEW-B12-15	AEW-B12	15							
	AEW-B14-10	AEW-B14	10							
	AEW-B14-15	AEW-B14	15							

Notes :

1. mg/Kg = milligrams per Kilogram; bgs=below existing ground surface.
2. ***Regulatory Criteria:***
   RSL - Industrial = USEPA's Regional Screening Levels under industrial scenario, January 2015.
   ESL (Tier 1 Soils) = California Regional Water Quality Control Board - Tier 1 Environmental Screening Levels (ESL for shallow soils and groundwater is a current or potential source of drinking water) under residential use scenario, February 2016;
   ESLs - Construction Worker = ESLs for Direct Exposure Soil Screening Levels Construction/Trench Worker Exposure Scenario.
   DTSC's SLs - Commerical = California Department of Toxic Substances Control - Screening Levels for commerical scenario, October 2015
   CHHSLs = California Human Health Screening Levels (CHHSLs) for residential scenario, September 2010
3. NA = Not Available; ND = Not detected at concentrations above the respective detection limit(s).
4. ### denotes the respective concentration above the detected limit
   ### denotes the respective concentration above at least one of the regulatory criteia listed above.
   Min = Minimum Concentration. Max = Maximum Concentration. Ave: Approximate Arithmetic Average Concentration (for concentration reported as below detection limit, the full detection limit was employed for the average estimation.

TABLE 4
RESULTS OF TITLE 22 METALS ANALYSIS ON SOIL SAMPLES
GATE 5 ROAD SEWER IMPROVEMENT PROJECT
SAUSALITO, CALIFORNIA

				Title 22 17-Metals (1)																			
				Sb	As	Ba	Be	Cd	Cr	WET Cr	TCLP Cr	Co	Cu	Pb	Hg	Mo	Ni	WET Ni	Se	Ag	Tl	V	Zn
			Unit (2)	mg/Kg	mg/Kg	mg/Kg	mg/Kg	mg/Kg	mg/Kg	mg/L	mg/L	mg/Kg	mg/Kg	mg/Kg	mg/Kg	mg/Kg	mg/Kg	mg/L	mg/Kg	mg/Kg	mg/Kg	mg/Kg	mg/Kg
Risk Regulatory and Reference Criteria (3)																							
USEPA RSL - Industrial				470	3	220000	2300	980	1800000	NA	NA	350	47000	800	40	5800	22000	NA	5800	5800	12	5800	350000
ESL - Tier 1 (Residential Soil w/ Shallow Groundwater)				31	0.067	2900	40	39	120000	NA	NA	23	3100	80	13	390	83	NA	390	390	0.78	600	23000
ESL - Construction Workers (Any Soil Depth, Any Land Use)				140	0.94	2900	2.9	6E-05	510000	NA	NA	27	3100	2700	42	1700	83	NA	1700	1700	3.4	600	100000
DTSC's SLs - Commerical				NA	3.4	NA	220	7.3	NA	NA	NA	NA	NA	NA	3.9	NA	4300	NA	NA	NA	NA	1600	NA
CHHSLs - Commerical				380	0.24	63000	190	7.5	100000	NA	NA	3200	38000	320	180	4800	16000	NA	4800	4800	63	6700	100000
Concentration in California Benchmark Soil				NA	3.5	509	1.28	0.36	122	NA	NA	14.9	28.7	23.9	0.26	1.3	57	NA	0.058	0.8	15.7	112	149
Hazardous Waste Criteria (5)																							
TTLC				500	500	10000	75	100	2500	NA	NA	8000	2500	1000	20	3500	2000	NA	100	500	700	2400	5000
10 x STLC				150	50	1000	7.5	10	50	NA	NA	800	250	50	2	3500	200	NA	10	50	70	240	2500
STLC				NA	NA	NA	NA	NA	NA	5	NA	NA	NA	NA	NA	NA	NA	20	NA	NA	NA	NA	NA
20 x TCLP				NA	100	2000	NA	20	100	NA	NA	NA	NA	100	4	NA	NA	NA	20	100	NA	NA	NA
TCLP				NA	NA	NA	NA	NA	NA	NA	5	NA	NA	NA	NA	NA	NA	NA	NA	NA	NA	NA	NA
Range of Potential Background Concentration (5)																							
Shaklette and Boerngen				0.62	7.0	670	0.97	NA	56	0	0	9.0	27	20	0.065	1.1	19	0	0.34	NA	NA	88	65
LBNL				< 6	24	410	1.0	5.6	120	0	0	25	63	43	0.42	4.8	272	0	4.9	2.9	10	90	140
Bradford et al.				0.60	3.5	509	1.28	0.36	122	NA	NA	14.9	28.7	23.9	0.26	1.3	57	NA	0.058	0.80	0.56	112	149
				See Note 6 for Assumptions on Statistical Evaluation																			
Laboratory ID	**Sample Idenfification**	**Sampling Location Identification**	**Approx. Depth (Feet bgs)(1)**	Min: <0.5 Max: 1.6 Ave: 0.8	Min: 4.9 Max: 15 Ave: 9.1	Min: 110 Max: 520 Ave: 259	Min: 0.56 Max: 0.92 Ave: 0.8	Min: <0.25 Max: <0.25 Ave: 0.25	Min: 35 Max: 140 Ave: 74	Min: <0.1 Max: 0.32	Min: <0.1 Max: <0.1	Min: 12 Max: 24 Ave: 17	Min: 28 Max: 58 Ave: 42	Min: 9.9 Max: 42 Ave: 24	Min: 0.058 Max: 0.47 Ave: 0.2	Min: 0.53 Max: 4.2 Ave: 1.3	Min: 40 Max: 200 Ave: 102	Min: 0.45 Max: 0.45	Min: <0.5 Max: <0.5 Ave: 0.5	Min: <0.5 Max: <0.5 Ave: 0.5	Min: <0.5 Max: <0.5 Ave: 0.5	Min: 40 Max: 77 Ave: 54	Min: 58 Max: 110 Ave: 81
Soil Samples (6)																							
COMP AEW-B1, B2 2.5-5'	AEW-B1-2.5	AEW-B1	2.5	***0.84***	***10***	***350***	***0.88***	<0.25	***64***	***0.12***	NR	***16***	***54***	***22***	***0.47***	***1.2***	***96***	NR	<0.50	<0.50	<0.50	***55***	***91***
	AEW-B1-5	AEW-B1	5																				
	AEW-B2-2.5	AEW-B2	2.5																				
	AEW-B2-5	AEW-B2	5																				
COMP AEW-B1, B2 10-15'	AEW-B1-10	AEW-B1	10	***1.6***	***5.5***	***150***	***0.62***	<0.25	***66***	***0.2***	NR	***24***	***34***	***39***	***0.12***	***0.59***	***120***	NR	<0.50	<0.50	<0.50	***41***	***66***
	AEW-B1-15	AEW-B1	15																				
	AEW-B2-10	AEW-B2	10																				
	AEW-B2-15	AEW-B2	15																				
COMP AEW-B3, B4 2.5-5'	AEW-B3-2.5	AEW-B3	2.5	***1.2***	***5.7***	***150***	***0.56***	<0.25	***35***	NR	NR	***12***	***31***	***42***	***0.18***	***0.97***	***40***	NR	<0.50	<0.50	<0.50	***62***	***73***
	AEW-B3-5	AEW-B3	5																				
	AEW-B4-2.5	AEW-B4	2.5																				
	AEW-B4-5	AEW-B4	5																				
COMP AEW-B3, B4 10-15'	AEW-B3-10	AEW-B3	10	<0.50	***4.9***	***250***	***0.76***	<0.25	***45***	NR	NR	***12***	***28***	***21***	***0.2***	***0.62***	***58***	NR	<0.50	<0.50	<0.50	***45***	***58***
	AEW-B3-15	AEW-B3	15																				
	AEW-B4-10	AEW-B4	10																				
	AEW-B4-15	AEW-B4	15																				
COMP AEW-B5, B11 2.5-5'	AEW-B5-2.5	AEW-B5	2.5	***1.3***	***11***	***330***	***0.92***	<0.25	***76***	***0.11***	NR	***16***	***48***	***37***	***0.18***	***0.88***	***110***	NR	<0.50	<0.50	<0.50	***58***	***93***
	AEW-B5-5	AEW-B5	5																				
	AEW-B11-2.5	AEW-B11	2.5																				
	AEW-B11-5	AEW-B11	5																				

TABLE 4 (Cont'd)
RESULTS OF TITLE 22 METALS ANALYSIS ON SOIL SAMPLES
GATE 5 ROAD SEWER IMPROVEMENT PROJECT
SAUSALITO, CALIFORNIA

				Title 22 17-Metals (1)																			
				Sb	As	Ba	Be	Cd	Cr	WET Cr	TCLP Cr	Co	Cu	Pb	Hg	Mo	Ni	WET Ni	Se	Ag	Tl	V	Zn
			Unit (2)	mg/Kg	mg/Kg	mg/Kg	mg/Kg	mg/Kg	mg/Kg	mg/L	mg/L	mg/Kg	mg/Kg	mg/Kg	mg/Kg	mg/Kg	mg/Kg	mg/L	mg/Kg	mg/Kg	mg/Kg	mg/Kg	mg/Kg
Risk Regulatory and Reference Criteria (3)																							
USEPA RSL - Industrial				470	3	220000	2300	980	1800000	NA	NA	350	47000	800	40	5800	22000	NA	5800	5800	12	5800	350000
ESL - Tier 1 (Residential Soil w/ Shallow Groundwater)				31	0.067	2900	40	39	120000	NA	NA	23	3100	80	13	390	83	NA	390	390	0.78	600	23000
ESL - Construction Workers (Any Soil Depth, Any Land Use)				140	0.94	2900	2.9	6E-05	510000	NA	NA	27	3100	2700	42	1700	83	NA	1700	1700	3.4	600	100000
DTSC's SLs - Commerical				NA	3.4	NA	220	7.3	NA	NA	NA	NA	NA	NA	3.9	NA	4300	NA	NA	NA	NA	1600	NA
CHHSLs - Commerical				380	0.24	63000	190	7.5	100000	NA	NA	3200	38000	320	180	4800	16000	NA	4800	4800	63	6700	100000
Concentration in California Benchmark Soil				NA	3.5	509	1.28	0.36	122	NA	NA	14.9	28.7	23.9	0.26	1.3	57	NA	0.058	0.8	15.7	112	149
Hazardous Waste Criteria (5)																							
TTLC				500	500	10000	75	100	2500	NA	NA	8000	2500	1000	20	3500	2000	NA	100	500	700	2400	5000
10 x STLC				150	50	1000	7.5	10	50	NA	NA	800	250	50	2	3500	200	NA	10	50	70	240	2500
STLC				NA	NA	NA	NA	NA	NA	5	NA	NA	NA	NA	NA	NA	NA	20	NA	NA	NA	NA	NA
20 x TCLP				NA	100	2000	NA	20	100	NA	NA	NA	NA	100	4	NA	NA	NA	20	100	NA	NA	NA
TCLP				NA	NA	NA	NA	NA	NA	NA	5	NA	NA	NA	NA	NA	NA	NA	NA	NA	NA	NA	NA
Range of Potential Background Concentration (5)																							
Shaklette and Boerngen				0.62	7.0	670	0.97	NA	56	0	0	9.0	27	20	0.065	1.1	19	0	0.34	NA	NA	88	65
LBNL				< 6	24	410	1.0	5.6	120	0	0	25	63	43	0.42	4.8	272	0	4.9	2.9	10	90	140
Bradford et al.				0.60	3.5	509	1.28	0.36	122	NA	NA	14.9	28.7	23.9	0.26	1.3	57	NA	0.058	0.80	0.56	112	149
				See Note 6 for Assumptions on Statistical Evaluation																			
Laboratory ID	**Sample Idenfification**	**Sampling Location Identification**	**Approx. Depth (Feet bgs)(1)**	Min: <0.5 Max: 1.6 Ave: 0.8	Min: 4.9 Max: 15 Ave: 9.1	Min: 110 Max: 520 Ave: 259	Min: 0.56 Max: 0.92 Ave: 0.8	Min: <0.25 Max: <0.25 Ave: 0.25	Min: 35 Max: 140 Ave: 74	Min: <0.1 Max: 0.32	Min: <0.1 Max: <0.1	Min: 12 Max: 24 Ave: 17	Min: 28 Max: 58 Ave: 42	Min: 9.9 Max: 42 Ave: 24	Min: 0.058 Max: 0.47 Ave: 0.2	Min: 0.53 Max: 4.2 Ave: 1.3	Min: 40 Max: 200 Ave: 102	Min: 0.45 Max: 0.45	Min: <0.5 Max: <0.5 Ave: 0.5	Min: <0.5 Max: <0.5 Ave: 0.5	Min: <0.5 Max: <0.5 Ave: 0.5	Min: 40 Max: 77 Ave: 54	Min: 58 Max: 110 Ave: 81
Soil Samples (6)																							
COMP AEW-B5, B11 10-15'	AEW-B5-10	AEW-B5	10	<0.50	***8.6***	***230***	***0.75***	<0.25	***81***	***0.32***	NR	***17***	***38***	***12***	***0.12***	***1.4***	***110***	NR	<0.50	<0.50	<0.50	***77***	***82***
	AEW-B5-15	AEW-B5	15																				
	AEW-B11-10	AEW-B11	10																				
	AEW-B11-15	AEW-B11	15																				
COMP AEW-B6, B7 2.5-5'	AEW-B6-2.5	AEW-B6	2.5	***0.58***	***9.7***	***240***	***0.9***	<0.25	***83***	***0.11***	NR	***15***	***38***	***26***	***0.15***	***1.1***	***120***	NR	<0.50	<0.50	<0.50	***50***	***82***
	AEW-B6-5	AEW-B6	5																				
	AEW-B7-2.5	AEW-B7	2.5																				
	AEW-B7-5	AEW-B7	5																				
COMP AEW-B6, B7 10-15'	AEW-B6-10	AEW-B6	10	***0.72***	***9.4***	***370***	***0.91***	<0.25	***130***	***0.18***	<0.10	***19***	***50***	***21***	***0.17***	***0.87***	***170***	NR	<0.50	<0.50	<0.50	***65***	***100***
	AEW-B6-15	AEW-B6	15																				
	AEW-B7-10	AEW-B7	10																				
	AEW-B7-15	AEW-B7	15																				
COMP AEW-B8, B9 2.5-5'	AEW-B8-2.5	AEW-B8	2.5	***0.65***	***6.6***	***280***	***0.75***	<0.25	***45***	NR	NR	***15***	***40***	***14***	***0.22***	***1.4***	***59***	NR	<0.50	<0.50	<0.50	***44***	***64***
	AEW-B8-5	AEW-B8	5																				
	AEW-B9-2.5	AEW-B9	2.5																				
	AEW-B9-5	AEW-B9	5																				
COMP AEW-B8, B9 10-15'	AEW-B8-10	AEW-B8	10	<0.50	***9.1***	***220***	***0.73***	<0.25	***140***	***0.15***	<0.10	***20***	***38***	***16***	***0.12***	***0.53***	***200***	***0.45***	<0.50	<0.50	<0.50	***63***	***79***
	AEW-B8-15	AEW-B8	15																				
	AEW-B9-10	AEW-B9	10																				
	AEW-B9-15	AEW-B9	15																				
COMP AEW-B10, B13 2.5-5'	AEW-B10-2.5	AEW-B10	2.5	***1.4***	***8.1***	***520***	***0.68***	<0.25	***56***	<0.10	NR	***15***	***49***	***37***	***0.37***	***0.92***	***65***	NR	<0.50	<0.50	<0.50	***54***	***71***
	AEW-B10-5	AEW-B10	5																				
	AEW-B13-2.5	AEW-B13	2.5																				
	AEW-B13-5	AEW-B13	5																				
COMP AEW-B10, B13 10-15'	AEW-B10-10	AEW-B10	10	***0.83***	***15***	***260***	***0.9***	<0.25	***110***	***0.16***	<0.10	***23***	***58***	***17***	***0.1***	***2.3***	***150***	NR	<0.50	<0.50	<0.50	***62***	***110***
	AEW-B10-15	AEW-B10	15																				
	AEW-B13-10	AEW-B13	10																				
	AEW-B13-15	AEW-B13	15																				

TABLE 4 (Cont'd)
RESULTS OF TITLE 22 METALS ANALYSIS ON SOIL SAMPLES
GATE 5 ROAD SEWER IMPROVEMENT PROJECT
SAUSALITO, CALIFORNIA

				Title 22 17-Metals (1)																			
				Sb	As	Ba	Be	Cd	Cr	WET Cr	TCLP Cr	Co	Cu	Pb	Hg	Mo	Ni	WET Ni	Se	Ag	Tl	V	Zn
			Unit (2)	mg/Kg	mg/Kg	mg/Kg	mg/Kg	mg/Kg	mg/Kg	mg/L	mg/L	mg/Kg	mg/Kg	mg/Kg	mg/Kg	mg/Kg	mg/Kg	mg/L	mg/Kg	mg/Kg	mg/Kg	mg/Kg	mg/Kg
Risk Regulatory and Reference Criteria (3)																							
USEPA RSL - Industrial				470	3	220000	2300	980	1800000	NA	NA	350	47000	800	40	5800	22000	NA	5800	5800	12	5800	350000
ESL - Tier 1 (Residential Soil w/ Shallow Groundwater)				31	0.067	2900	40	39	120000	NA	NA	23	3100	80	13	390	83	NA	390	390	0.78	600	23000
ESL - Construction Workers (Any Soil Depth, Any Land Use)				140	0.94	2900	2.9	6E-05	510000	NA	NA	27	3100	2700	42	1700	83	NA	1700	1700	3.4	600	100000
DTSC's SLs - Commerical				NA	3.4	NA	220	7.3	NA	NA	NA	NA	NA	NA	3.9	NA	4300	NA	NA	NA	NA	1600	NA
CHHSLs - Commerical				380	0.24	63000	190	7.5	100000	NA	NA	3200	38000	320	180	4800	16000	NA	4800	4800	63	6700	100000
Concentration in California Benchmark Soil				NA	3.5	509	1.28	0.36	122	NA	NA	14.9	28.7	23.9	0.26	1.3	57	NA	0.058	0.8	15.7	112	149
Hazardous Waste Criteria (5)																							
TTLC				500	500	10000	75	100	2500	NA	NA	8000	2500	1000	20	3500	2000	NA	100	500	700	2400	5000
10 x STLC				150	50	1000	7.5	10	50	NA	NA	800	250	50	2	3500	200	NA	10	50	70	240	2500
STLC				NA	NA	NA	NA	NA	NA	5	NA	NA	NA	NA	NA	NA	NA	20	NA	NA	NA	NA	NA
20 x TCLP				NA	100	2000	NA	20	100	NA	NA	NA	NA	100	4	NA	NA	NA	20	100	NA	NA	NA
TCLP				NA	NA	NA	NA	NA	NA	NA	5	NA	NA	NA	NA	NA	NA	NA	NA	NA	NA	NA	NA
Range of Potential Background Concentration (5)																							
Shaklette and Boerngen				0.62	7.0	670	0.97	NA	56	0	0	9.0	27	20	0.065	1.1	19	0	0.34	NA	NA	88	65
LBNL				< 6	24	410	1.0	5.6	120	0	0	25	63	43	0.42	4.8	272	0	4.9	2.9	10	90	140
Bradford et al.				0.60	3.5	509	1.28	0.36	122	NA	NA	14.9	28.7	23.9	0.26	1.3	57	NA	0.058	0.80	0.56	112	149
				See Note 6 for Assumptions on Statistical Evaluation																			
Laboratory ID	**Sample Idenfification**	**Sampling Location Identification**	**Approx. Depth (Feet bgs)(1)**	Min: <0.5 Max: 1.6 Ave: 0.8	Min: 4.9 Max: 15 Ave: 9.1	Min: 110 Max: 520 Ave: 259	Min: 0.56 Max: 0.92 Ave: 0.8	Min: <0.25 Max: <0.25 Ave: 0.25	Min: 35 Max: 140 Ave: 74	Min: <0.1 Max: 0.32	Min: <0.1 Max: <0.1	Min: 12 Max: 24 Ave: 17	Min: 28 Max: 58 Ave: 42	Min: 9.9 Max: 42 Ave: 24	Min: 0.058 Max: 0.47 Ave: 0.2	Min: 0.53 Max: 4.2 Ave: 1.3	Min: 40 Max: 200 Ave: 102	Min: 0.45 Max: 0.45	Min: <0.5 Max: <0.5 Ave: 0.5	Min: <0.5 Max: <0.5 Ave: 0.5	Min: <0.5 Max: <0.5 Ave: 0.5	Min: 40 Max: 77 Ave: 54	Min: 58 Max: 110 Ave: 81
Soil Samples (6)																							
COMP AEW-B12, B14 2.5-5'	AEW-B12-2.5	AEW-B12	2.5	***0.65***	***12***	***160***	***0.71***	<0.25	***46***	NR	NR	***14***	***46***	***23***	***0.16***	***0.8***	***59***	NR	<0.50	<0.50	<0.50	***44***	***100***
	AEW-B12-5	AEW-B12	5																				
	AEW-B14-2.5	AEW-B14	2.5																				
	AEW-B14-5	AEW-B14	5																				
COMP AEW-B12, B14 10-15'	AEW-B12-10	AEW-B12	10	<0.50	***12***	***110***	***0.58***	<0.25	***62***	<0.10	NR	***13***	***30***	***9.9***	***0.058***	***4.2***	***73***	NR	<0.50	<0.50	<0.50	***40***	***65***
	AEW-B12-15	AEW-B12	15																				
	AEW-B14-10	AEW-B14	10																				
	AEW-B14-15	AEW-B14	15																				

Notes :

1. Sb = Antimony, As = Arsenic, Ba = Barium, Be = Beryllium, Cd = Cadmium, Cr = Chromium, Cr VI = Chromium VI, Co = Cobalt, Cu = Copper, Pb = Lead, Hg = Mercury, Mo = Molybdenum, Ni = Nickel, Se = Selenium, Ag = Silver, Tl = Thallium, V = Vanadium, and Zn = Zinc. WET = California Waste Extraction Test. TCLP = United States Environmental Protection Agency Toxicity Characteristic Leaching Procedure.
2. mg/Kg = milligrams per Kilogram; mg/L = milligrams per Liter; % - percent by volume.
3. RSL - Industrial = USEPA's Regional Screening Levels under industrial scenario, January 2015.
   ESL (Tier 1 Soils) = California Regional Water Quality Control Board - Tier 1 Environmental Screening Levels (ESL for shallow soils and groundwater is a current or potential source of drinking water) under residential use scenario, February 2016;
   ESLs - Construction Worker = ESLs for Direct Exposure Soil Screening Levels Construction/Trench Worker Exposure Scenario.
   DTSC's SLs - Commerical = California Department of Toxic Substances Control - Screening Levels for commerical scenario, October 2015
   CHHSLs = California Human Health Screening Levels (CHHSLs) for commercial scenario, September 2010
4. NA = Not Available; NR = Not required; ND = Not detected at concentrations above the respective detection limit(s); and - - = Not Analyzed (see Table 1 for explanation).
5. STLC = California Souble Threshold Limit Concentration
   TTLC = California Total Threshold Limit Concentration
   TCLP = United States Environmental Protection Agency's Toxicity Characteristic Leaching Procedure
   Shaklette and Boerngen = The estimated arithmetic mean of Western United States in Table 2 of the "Element Concentrations in Soils and Other Surficial Materials of the Conterminous United States" by Hansord T. Shacklette and Josephine G. Boerngen, U.S. Geological Survey Professional Paper 1270 and dated 1984.
   LBNL = Table 5 of the "Analysis of Background Distributions of Metals in the Soil at Lawrence Berkeley National Laboratory" by Diamond et al. and dated June 2002, Revised April 2009.
   Bradford et al. = Reported mean concentration of the "Background Concentrations of Trace and Major Elements in California Soils" by Bradford etal., Kearney Foundation of Soil Science, March 1996.
6. ***###*** denotes the respective concentration above the detected limit
   ### denotes the respective concentration above the respective ELS - Residential value.
   Min = Minimum Concentration. Max = Maximum Concentration. Ave: Approximate Arithmetic Average Concentration (for concentration reported as below detection limit, the full detection limit was employed for the average estimation.

TABLE 5
RESULTS OF TOTAL PETROLEUM HYDROCARBONS, VOCs, SVOCs, PESTICIDES, AND PCBs ANALYSES ON GROUNDWATER SAMPLES
GATE 5 ROAD SEWER IMPROVEMENT PROJECT
SAUSALITO, CALIFORNIA

		TPHs-G	TPHs-D	TPHs-MO	Oil & Grease	Toluene	Ethyl Benzene	Xylenes	MTBE	Benzene	Carbon Disulfide	1,1-Dichloroethane	4-Isopropyl toluene	1,1,1-Trichloroethane	Other VOCs	SVOCs	Pesticides	PCBs, Total
	Unit (2)	µg/L	µg/L	µg/L	µg/L	µg/L	µg/L	µg/L	µg/L	µg/L	µg/L	µg/L	µg/L	µg/L	µg/L	µg/L	µg/L	µg/L
Risk Regulatory and Reference Criteria (3)																		
ESL (Tier 1 Groundwater)		100	100	100	NA (4)	40	13	20	5.0	1	NA	5.0	NA	62	NA	NA	NA	0.00017
Wastewater Discharge Criteria																		
SMCSD Discharge Criteria		50000	50000	50000	2.0	25	NA	NA	NA	2	NA	20	NA	NA	NA	NA	NA	0.1
Laboratory ID	**Sample Idenfification**																	
Groundwater																		
AEW-B2 GW	AEW-B2-GW	<50	***1500***	***3800***	<5.0	<0.50	<0.50	<1.5	***1.6***	<0.50	***4.9***	<0.50	<0.50	<0.50	ND	ND	ND	<5.0
AEW-B9 GW	AEW-B9-GW	<50	<50	<250	<5.0	<0.50	<0.50	<1.5	<0.50	<0.50	<0.50	<0.50	<0.50	<0.50	ND	ND	ND	<0.50
AEW-B11 GW	AEW-B11-GW	<50	***250***	***4300***	***17***	<0.50	<0.50	<1.5	***0.62***	<0.50	<0.50	***0.94***	***0.63***	***0.68***	ND	ND	ND	<30

Notes :

1. TPHs = Total Petroleum Hydrocarbons; TPHs-G= Gasoline; TPHs=Diesel; TPHs-MO=Motor Oil; MTBE=Methyl tert-butyl ether; VOCs = Volatile Organic Compounds; SVOCs=Semi-Volatile Organic Compounds; PCBs=Polychlorinated biphenyls
2. µg/L = micrograms per Liter; mg/L = milligrams per Liter
3. ESL (Tier 1 Groundwater) = California Regional Water Quality Control Board - Tier 1 Environmental Screening Levels (ESL for shallow soils and groundwater is a current or potential source of drinking water) under residential use scenario, February 2016;
   SMCSD Discharge Criteria = Average Discharge Limits for Non-Sanitary Wastewater Discharges into the SMCSD (Sausalito Marin City Sanitary District), February 17, 1993
4. NA = Not Available; NR = Not required; ND = Not detected at concentrations above the respective detection limit(s); and - - = Not Analyzed (see Table 1 for explanation).
6. ***20*** denotes the respective concentration above the detected limit
   4.4 denotes the respective concentration above the respective Tier 1 ESL.
   5.9 denotes the respective concentration above the respective SMCSD Discharge Criteria.
   Min = Minimum Concentration. Max = Maximum Concentration.
   detection limit was employed for the average estimation.

TABLE 6
RESULTS OF TITLE 22 METALS ANALYSES ON GROUNDWATER SAMPLES
GATE 5 ROAD SEWER IMPROVEMENT PROJECT
SAUSALITO, CALIFORNIA

		Title 22 17-Metals (1)																
		Sb	As	Ba	Be	Cd	Cr	Co	Cu	Pb	Hg	Mo	Ni	Se	Ag	Tl	V	Zn
	Unit (2)	µg/L	µg/L	µg/L	µg/L	µg/L	µg/L	µg/L	µg/L	µg/L	µg/L	µg/L	µg/L	µg/L	µg/L	µg/L	µg/L	µg/L
Risk Regulatory and Reference Criteria (3)																		
	ESL (Tier 1 Groundwater)	6	10	1000	2.7	0.25	50	3.0	3.1	2.5	0.051	10	8.2	5.0	0.19	2.0	19	81
Wastewater Discharge Criteria																		
	SMCSD Discharge Criteria	NA (4)	500	NA	NA	50	100	NA	50	100	10	NA	100	100	50	NA	NA	1000
Laboratory ID	**Sample Idenfification**	**Min: <5 Max: <10**	**Min: <5 Max: 330**	**Min: 67 Max: 4700**	**Min: <5 Max: 40**	**Min: <2.5 Max: 29**	**Min: <5 Max: 3300**	**Min: <5 Max: 1600**	**Min: <20 Max: 2000**	**Min: <5 Max: 860**	**Min: <0.25 Max: 3**	**Min: 8.4 Max: 91**	**Min: 11 Max: 8800**	**Min: <5 Max: 12**	**Min: <1.9 Max: <3.8**	**Min: <5 Max: <10**	**Min: <5 Max: 1800**	**Min: <150 Max: 2400**
Groundwater Samples (5)																		
AEW-B2 GW	AEW-B2-GW	<10	***150***	***2500***	<10	<5.0	***1600***	***300***	***700***	***730***	***2.0***	***22***	***2100***	<10	<3.8	<10	***620***	***1100***
AEW-B2 GW (dissolved)	AEW-B2-GW	<5.0	***10***	***350***	<5.0	<2.5	<5.0	<5.0	<20	<5.0	<0.25	***14***	***11***	<5.0	<1.9	<5.0	<5.0	<150
AEW-B9 GW	AEW-B9-GW	<10	***22***	***4700***	<10	<5.0	***830***	***240***	***510***	***210***	***3.0***	<10	***1200***	<10	<3.8	<10	***360***	***900***
AEW-B9 GW (dissolved)	AEW-B9-GW	<5.0	<5.0	***230***	<5.0	<2.5	<5.0	***21***	<20	<5.0	<0.25	***8.4***	***18***	<5.0	<1.9	<5.0	<5.0	<150
AEW-B11 GW	AEW-B11-GW	<10	***330***	***3400***	***40***	***29***	***3300***	***1600***	***2000***	***860***	***0.62***	***36***	***8800***	***12***	<3.8	<10	***1800***	***2400***
AEW-B11 GW (dissolved)	AEW-B11-GW	<5.0	<5.0	***67***	<5.0	<2.5	<5.0	***11***	<20	<5.0	<0.25	***91***	***29***	<5.0	<1.9	<5.0	<5.0	<150

Notes :

1. Sb = Antimony, As = Arsenic, Ba = Barium, Be = Beryllium, Cd = Cadmium, Cr = Chromium, Cr VI = Chromium VI, Co = Cobalt, Cu = Copper, Pb = Lead, Hg = Mercury, Mo = Molybdenum, Ni = Nickel, Se = Selenium, Ag = Silver, Tl = Thallium, V = Vanadium, and Zn = Zinc.
2. µg/L = micrograms per Liter.
3. ESL = California Regional Water Quality Control Board - Tier 1 Environmental Screening Levels (ESL for shallow soils and groundwater is a current or potential source of drinking water) under residential use scenario, February 2016.
   SMCSD Discharge Criteria = Discharge Limits for Non-Sanitary Wastewater Discharges into the SMCSD (Sausalito Marin City Sanitary District), February 17, 1993
4. NA = Not Available; NR = Not required; ND = Not detected at concentrations above the respective detection limit(s); and - - = Not Analyzed (see Table 1 for explanation).
5. ***20*** denotes the respective concentration above the detected limit
   4.4 denotes the respective concentration above the respective Tier 1 ESL.
   5.9 denotes the respective concentration above the respective SMCSD Discharge Criteria.
   Min = Minimum Concentration. Max = Maximum Concentration.

TABLE 7
RESULTS OF TSS, COD, AND pH ANALYSES ON GROUNDWATER SAMPLES
GATE 5 ROAD SEWER IMPROVMENT PROJECT
SAUSALITO, CALIFORNIA

			TSS (1)	COD	pH
		Unit (2)	mg/L	mg/L	- -
Risk Regulatory Criteria (3)					
		ESL (Tier 1 Groundwater)	NA (4)	NA	NA
Wastewater Discharge Criteria					
		SMCSD Discharge Criteria	500	NA	6 to 9
Laboratory ID	**Sample Idenfification**	**Sampling Location Identification**	**Min: 15900 Max: 338000**	**Min: 460 Max: 5200**	**Min: 6.4 Max: 7.46**
Groundwater Samples					
AEW-B2 GW	AEW-B2-GW	AEW-B2	***15,900***	***540***	***6.62***
AEW-B9 GW	AEW-B9-GW	AEW-B9	***16,400***	***460***	***6.4***
AEW-B11 GW	AEW-B11-GW	AEW-B11	***338,000***	***5200***	***7.46***

Notes :

1. TSS = Total Suspended Solids; COD = Chemical oxygen demand
2. mg/L = Milligrams per liter.
3. ESL = California Regional Water Quality Control Board - Tier 1 Environmental Screening Levels (ESL for shallow soils and groundwater is a current or potential source of drinking water) under residential use scenario, February 2016;
   SMCSD Discharge Criteria = Discharge Limits for Non-Sanitary Wastewater Discharges into the SMCSD (Sausalito Marin City Sanitary District), February 17, 1993.
4. NA = Not available/not applicable

FIGURES

NOT TO SCALE

AEW Engineering, Inc.
55 New Montgomery Street, Suite 722
San Francisco, CA 94105

Site Location Map
Gate 5 Sewer Improvement Project
Sausalito, California

Designed by: KPL	*Drawn by: RNM*	*Reviewed by: RY*	*Approved by: KPL*
Date: 2/1/2016	*Version Number: 0*	*Project No: 2015-29*	*File Name: Figure 1.dwg*

Figure 1

APPROXIMATE SCALE

0 100 200 FEET

AEW Engineering, Inc.
55 New Montgomery Street
Suite 722
San Francisco, CA 94105

Designed by: RNM	Drawn by: RNM
Reviewed by: RY	Approved by: KPL
Date: 3/14/2015	Project No: 2015-029
Version Number: 0	File Name: Sewer Boring Locations.dwg

Soil and Groundwater Sampling Locations
Gate 5 Road Sewer Improvement Project
Sausalito, California

Figure 2

APPENDIX A

DRILLING PERMITS

COUNTY OF MARIN

COMMUNITY DEVELOPMENT AGENCY
ENVIRONMENTAL HEALTH SERVICES
MARIN COUNTY CIVIC CENTER
3501 CIVIC CENTER DRIVE, ROOM 236, SAN RAFAEL, CA 94903
(415) 473-6907 FAX: (415) 473-4120
www.marincounty.org/ehs

PERMIT FOR TEST HOLES / SOIL BORINGS

Date of Issuance: February 3, 2016
Date of Expiration: February 2, 2017

To: City of Sausalito
Attention: G. Goldman
420 Litho Street
Sausalito, CA 94965

Permit No.: TH B10435 (14)

Street Address: Gate 5 Road, Coloma St., Harbor Dr.

City: Sausalito

Assessor's Parcel Number: n/a

Driller: Cascade Drilling, LP, 120 S. 23rd Street, Richmond, CA 94804

Your application and plans have been reviewed for compliance with relevant California State and Marin County regulations. Permission is hereby granted to perform the stated work at the above, designated site.

In order to provide the necessary inspections and/or to prevent rescheduling the well driller, the well driller shall notify this office in person at least **two working days** in advance of drilling the well. Also, **contact the office on the day of the drilling.** The grout shall not be placed until approval from Environmental Health Services is granted. If arrangements other than an inspection are made and approved before drilling, then documentation on the methods and materials used to destroy the hole shall be submitted within 30 days of drilling.

CONDITIONS:

1. Construction and destruction criteria shall meet all applicable sections of the current State of California Water Well Standards Bulletin 74 (as revised).
2. Unless approved by EHS beforehand, the well driller shall seal with a cement grout and have a pump and tremie system available in the event that groundwater is discovered.
3. The holes shall be sealed ASAP, especially in the event of rain, to prevent contamination of the groundwater by surface water.
4. If the boring is drilled on property owned by a party other than the applicant, this permit is not valid until applicable local encroachment permits or permissions are first obtained. Please contact the appropriate landowner, city, county, park or special district agencies to obtain permissions.
5. The Marin County CUPA (Office of Waste Management, Department of Public Works) or the local L.P.A. shall be notified whenever test results from sampling demonstrate chemical contamination or leakage of underground storage tanks.
6. It is the responsibility of the driller and project consultant to locate all underground utilities which may be impacted by drilling activities.

This permit is valid for twelve months from the date of issuance. If work has not commenced prior to the expiration date, an additional application and the associated fee shall be required.

Issued by,

David Mc Mullen

David McMullen, R.E.H.S.

c: AEW Engineering Inc., 55 New Montgomery Street, Suite 722, San Francisco, CA 94105
CUPA

OFFICE USE ONLY

1. Number of holes to be drilled 14
2. Destruction docs submitted _____
3. Project completed _____

- [ ] City of Belvedere
- [ ] City of Larkspur
- [ ] City of Mill Valley
- [ ] City of Novato
- [ ] City of San Rafael *
- [x] City of Sausalito
- [ ] Town of Ross
- [ ] Town of Fairfax
- [ ] Town of Corte Madera
- [ ] Town of San Anselmo
- [ ] Town of Tiburon
- [ ] County of Marin

EP No: 16-032 A / B

UNIFIED APPLICATION FOR ENCROACHMENT PERMIT

APPLICATION DATE: 02/16/2016 APN: - -

LOCATION OF WORK OR ENCROACHMENT: Gate 5 Road between Harbor Drive to Coloma Street
No. Street City/Township

CROSS STREET: Harbor Dr and Coloma St ESTIMATED COST: $

STARTING DATE: 02/23/2016 COMPLETION DATE: 02/26/2016

PROPERTY OWNER'S NAME AND ADDRESS (If Different from Applicant):
City of Sausalito Department of Public Works, 420 Litho Street, Sausalito, CA

THE UNDERSIGNED HEREBY APPLIES FOR PERMISSION TO PERFORM THE FOLLOWING DESCRIBED WORK AND/OR OTHERWISE ENCROACH ON A LOCAL AGENCY RIGHT-OF-WAY (ROW):

DESCRIPTION OF WORK OR ENCROACHMENT (Include plans or sketch):

Check all that apply to the project and provide a written description:

- [ ] Driveway Approach
- [ ] Curb & Gutter
- [ ] Sewer Improvement
- [ ] Sidewalk
- [ ] Water Service
- [ ] Excavation
- [ ] Accessible Ramp
- [ ] New Utilities
- [ ] Landscaping
- [ ] Debris Box
- [ ] Special Event
- [x] Other (Describe)

Describe: Soil borings in street and private property for sewer improvement project.

Road Surface Type: [x] Asphalt [ ] Concrete [ ] Other:

Trenching Work: [ ] Yes [ ] No Linear Feet: Surface Thickness:

Traffic Control Plan: [x] Yes [ ] No

Applicant agrees that all work will be performed in accordance with the rules, regulations and standards of the Local Agency Department of Public Works and any Local Municipal Code. All work shall be subject to inspection and approval by the Department of Public Works. Applicant shall indemnify, defend and hold the Local Agency, its officers, agents and employees harmless from any and all claims, suits or liability, including, but not limited to, litigation costs and attorney's fees which the Local Agency may incur as the result of any and all claims and suits for personal injury, property damage or inverse condemnation by reason of applicants placement of/or maintenance of encroachments authorized by this permit. No work shall commence until permit is issued.

APPLICANT'S NAME / COMPANY (PLEASE PRINT): Randall Young / AEW Engineering, Inc.

CONTRACTOR'S NAME: Contractor License No:

APPLICANT'S MAILING ADDRESS: 55 New Montgomery Street, Suite 722, San Francisco, CA 94105

AGENCY:

CONTACT NUMBERS: 415-495-8401 (Daytime Phone) 415-358-5598 (Fax) ryoung@aewengineering.com (Email)

APPLICANT'S SIGNATURE: Randall Young

For Agency Use Only

Accepted By: AC

Insurance on file? [ ] Yes [ ] No Final Insp. Cleared: [ ]

Road Moratorium? [ ] Yes [ ] No Receipt #: JE 110-550-4000-435

Fees:
Application:
Plan Review & Inspection:
Total: $423

* Contact City of San Rafael Public Works for Specific Encroachment Permit Application

Revised May 20

Encroachment Permit Conditions

- ☐ Construction Standard(s): _____
- ☐ General Conditions: _____
- ☐ Comprehensive General Liability insurance in amounts not less than $1,000,000 combined single limit applying to bodily injury, personal injury and property damage are required.
- ☑ Additional Insured Endorsement: The local agency must be named as an additionally insured on a separate endorsement sheet that modifies the general liability policy.
- ☐ Contact local Police Department, Fire Department, and Parking Services prior to start of work.
- ☑ The Contractor shall maintain local access and provide emergency vehicle access at all times.
- ☐ Compaction test is required and shall be submitted to local Public Works Department.
- ☑ Provide a traffic control plan per the Manual on Uniform Traffic Control Devices (MUTCD).
- ☑ Provide safe pedestrian and wheelchair access, per ADA and State requirements, during construction.
- ☑ All work shall be performed between the hours of 8am and 6pm.
- ☐ Please contact _____ prior to start of work and for final inspection.
- ☐ Planning review required: YES / (NO)
- ☑ Special Conditions: See attached

Encroachment Permit Approval

Approved By: A. Davidson Date: 2/18/16

Inspected By: _____ Date: _____

Special Conditions

1. No non-stormwater discharge shall enter the public storm drainage system.
2. The public right of way shall be kept clean at all times. Spilled debris shall be cleaned promptly. No visible accumulation of sediment is permitted. No washing of sediment into drainage inlet protection is permitted.
3. Maintain access to adjacent driveways.
4. Contractor shall coordinate with property owners/businesses whose driveway may be affected. Access shall not be delayed by more than 15 minutes.
5. No parking signs shall be obtained from City of Sausalito Community Development Department. No parking signs shall be posted and verified by the County Dispatch 72 hours prior. To verify the no parking signs, call County Dispatch 415-499-7234.
6. Contractor shall provide constant dust control.
7. Project shall not increase emergency response time and shall allow emergency vehicles to pass without delay.

CITY OF SAUSALITO

STANDARD CONDITIONS FOR ENCROACHMENT PERMIT NO. 16-032

DESCRIPTION: Soil borings on Gate 5 Road

Condition Marked ☑ Apply to this Project

THIS ENCROACHMENT PERMIT IS GOOD FOR ☐ 6 MONTHS __ ☐ ONE YEAR __ ☐ 18 MONTHS __ ☑ AS NOTED ON THE E.P.APPLICATION 3/31/16

☑ 1. This permit, or a complete copy, shall be kept at the work site at all times while work is being performed.

☐ 2. Notify Engineering Division staff at least 24 hours in advance of beginning work. _____ City Engineer at (415) 289-41111, ext. 111 and/or _____ Sewer Systems Coordinator at (415) 289-4192.

☑ 3. Contractor is to comply with all requirement of Ordinance No. 1048 (Noise Ordinance) including limiting hours of work in residential areas between 8:00AM and ~~7:00PM~~ 6pm, Monday through Friday, between 9:00AM and 5:00PM, Saturdays, and between 9:00AM and 7:00PM, on City Holidays. No work is permitted on Sunday, except by owner occupant between 9:00AM and 7:00PM.

☑ 4. Permittee shall comply with all Federal State and local laws regulation and statutes applicable to the work being performed under this permit. This also includes compliance with the requirements and permit conditions of the State of California Division of Industrial Safety.

☑ 5. The Permittee shall repair or replace at the discretion of the City Engineer, any and all public facilities damaged as a result of Permittee's actions in connection with this permit, and shall guarantee repairs or replacements to all work done under this permit, as deemed necessary by the City Engineer for a period of one year after completion of said work.

☑ 6. All traffic control shall be performed in accordance with the requirements of the current edition of Caltrans publication, "California Manual on Uniform Traffic Devices, Part 6- Temporary Traffic Control" including all specified advance construction signs and channelization devices. Construction warning signs and channelization devices are to be sufficient to adequately inform and protect vehicles, bicycle and pedestrian traffic. Permittee shall have available a copy of the Manual for workers at the construction site at all times during the progress of the work.

☐ 7. Where excavations have been permitted in paved streets, Permittee shall place temporary informational signs at each end of the work in addition to those signs required by the "California Manual on Uniform Traffic Devices, Part 6- Temporary Traffic Control." Such informational signs shall be a minimum of 18 x 24 inches, clearly identify the owner of the facility for which the work is being done, and shall show a telephone number of the owner where the public may obtain information relative to the work being done.

☑ 8. Traffic shall be permitted to pass through the work area at all times unless otherwise permitted in writing by the City Engineer. Any street closures shall be approved in advance by the City Engineer.

☑ 9. If the City Engineer determines that public convenience or safety is being jeopardized by Permittee's actions or inactions, the City Engineer may order the condition remedied by either verbal or written communication to the Permittee. If Permittee fails to remedy the condition within eight hours of such notice, the City Engineer may, at his or her discretion, either remedy the condition or contract to remedy the condition, and the cost thereof, including administrative expenses shall be charged to the Permittee.

☑ 10. If any work is performed in the location of an existing pedestrian path of travel, the Contractor shall restore the path of travel compliant with all ADA accessibility standards.

☐ 11. Any pavement marking and/or legends which are damaged or removed shall be replaced in kind by the Contractor at his/her expense. The repainting of any street markings or legends shall be performed using City stencils:

☑ 12. Wherever new work crosses any existing ~~City~~ utilities, the Contractor shall pothole the existing ~~City~~ utilities and determine their actual depth so as to avoid hitting these facilities during excavation.

☐ 13. All AC or PCC to be removed is to be sawcut at the edges.

☐ 14. All new AC street trench resurfacing is to be placed in maximum lifts of 3 inches and the final surface is to be fog sealed (unless a sand or slurry seal is called for on. the plans).

CITY OF SAUSALITO

STANDARD CONDITIONS FOR ENCROACHMENT PERMIT NO. 16-032

☐ 15. All sections of curb, gutter and sidewalk to be replaced, shall have 12 inch long dowels (#4 reinforcing bars) inserted 6" into the existing concrete. A minimum of 2 dowels shall be placed into the curb and gutter. A minimum of 2 dowels shall be placed into sidewalk. Sidewalk dowel spacing shall be 24 inches on center.

☐ 16. Portions of existing sidewalk or curb and gutter to be removed shall be removed to the nearest expansion joint or sawcut at an existing score mark. Sawcuts must be at least 1-1/2 inches deep.

☐ 17. Concrete curbs, gutters and sidewalk shall consist of five sacks of cement per cubic yard with 3/8" maximum aggregate. Two pounds of lampblack shall be added per cubic yard. Slump shall not exceed 4 inches.

☐ 18. Special care shall be taken to match the existing finish, color, texture and score joining during replacement of the sidewalk.

☐ 19. Curb, gutter and sidewalk surfaces shall be broom finished unless otherwise approved by the City Engineer.

☐ 20. New sidewalk thickness shall be 4 inches minimum and driveway thickness shall be 6" minimum.

☑ 21. All excavations shall be backfilled and paved either temporarily or permanently at the end of each work day or covered with steel traffic plates held securely in place.

☐ 22. All backfill placement shall be approved by the City Engineer prior to permanent pavement replacement.

☐ 23. Tree roots shall not be cut or in any way damaged by Permittee.

☐ 24. Trench backfill shall be either concrete slurry containing one sack of cement per cubic yard with ¾ inch Maximum aggregate size, or Class 2 Aggregate Base compacted to 95% relative compaction as determined by California Test Method No. 216. All other trench details shall conform with Uniform Standard Drawing No. 330, 340 and 350 except as modified herein.

☑ 25. Permittee shall bear the entire cost of restoring the street or other property of the City, to the satisfaction of the City Engineer.

☑ 26. Excavated materials, equipment, construction materials or other debris shall not be stored or stockpiled on public streets

☐ 27. The top six inches of subgrade shall be compacted to at least 95% relative Compaction in accordance with California Test Method No. 236 and shall be dampened before placing concrete.

☐ 28. Where unsuitable subgrade material is encountered, the City Engineer may require remedial work to be done, including, but not limited to, placing a layer of crushed rock under the concrete 'section.

☐ 29. Undercut subgrade for gutter or sidewalk shall be filled with Class 2 Aggregate Base.

☐ 30. Where trench excavation is longitudinal with the traffic lane and extends 100 feet or more, a 2" minimum thickness of asphalt concrete paving with pavement reinforcing fabric shall be placed across the entire width of the affected traffic lane upon completion of trench work. Existing surfacing shall be removed as necessary to maintain satisfactory cross slopes.

☐ 31. One-half inch thick expansion joints shall be placed on both sides of driveway approaches, curb and sidewalk return points and at 4 feet on center. Weakened plane joints in sidewalk shall be at least 1-1/2 inch deep and placed at 16 feet on center.

☑ 32. All work shall be performed in accordance with the codes and ordinances of the City of Sausalito and the Uniform Construction Standards, Specifications of the Cities of Marin and County of Marin.

☐ 33. The Contractor is to provide a Storm Water Pollution Prevention Plan to the City for review and approval. City Approval must be obtained prior to commencing any work.

☑ 34. Underground Service Alert (USA) shall be notified at tel. (800) 642-2444, no later than 48 hours prior to excavation near utilities.

☐ 35. No new utility boxes or poles will be permitted in the sidewalk area without the written approval of the City Engineer.

APPENDIX B

BORING LOGS

DATE DRILLED: 2/24/2016	**Log of Boring:**	**AEW-B1**
DRILLING METHOD: Geoprobe		
HAMMER WEIGHT: NA	DROP: NA	LOGGED BY: RNM
SAMPLER(S): R. Musselman, R. Young		
Surface Conditions: Asphalt		

TIME	
START	FINISH
12:20	13:00

Depth (feet)	Sample	Sample Type	Sample Time	Sample No.	SPT N-value	Inches Driven/ Inches Recovered	U.S.C.S. Classification	
								6" Asphalt, 8" Baserock
1								
2							SP	SAND (SP), brown, damp, fine sand, some fine angular gravel, trace clay
3	■	Grab	12:30	B1 2.5'	--	--		
4						12/12	SP	SAND (SP), brown, damp, fine sand, some fine angular gravel, trace clay
5	■	Direct Push	12:34	B1 5'	--	24/19		
6							CL	CLAY (CL), soft, damp, grey clay, some fine angular gravel
7						24/15	CL	CLAY with GRAVEL (CL/GP), moist, grey clay, some angular gravel, trace sand
8								
9								
10	■	Direct Push	12:45	B1 10'	--	48/18	GP	GRAVEL (GP), grey, wet, angular, fine to medium gravel, some clay, trace fine sand
11								
12								
13								
14						48/26		
15	■	Direct Push	13:02	B1 15'	--			
16								Bottom of Boring at 16 feet bgs.
17								
18								
19								
20								

AEW Engineering, Inc.
55 New Montgomery, Suite 722
San Francisco, CA 94105

Drawn By: RNM	AEW-B1	Project No. 2015-029
Reviewed By: RY		Sheet 1 of 1

DATE DRILLED: 2/24/2016	**Log of Boring:**	**AEW-B2**
DRILLING METHOD: Geoprobe		
HAMMER WEIGHT: NA	DROP: NA	LOGGED BY: RNM
SAMPLER(S): R. Musselman, R. Young		TIME
Surface Conditions: Asphalt	START	FINISH
	10:25	11:25

Depth (feet)	Sample	Sample Type	Sample Time	Sample No.	SPT N-value	Inches Driven/ Inches Recovered	U.S.C.S. Classification	
								3" Asphalt, 6" Baserock
1								
2							GC	Clayey GRAVEL with sand (GC), dark brown, medium dense, moist, fine angular gravel
3	■	Grab	10:35	B2 2.5'	--	--		
4						24/24		
5	■	Direct Push	10:40	B2 5'	--			
6							SC	Clayey SAND with gravel (SC), dark brown, medium dense, moist, fine to coarse sand, fine gravel
7						24/24		
8								
9								
10	■	Direct Push	10:50	B2 10'	--	48/48	CL	CLAY with sand (CL), dark green, saturated, medium stiff, fine to coarse sand, occasional fine gravel
11								
12								
13								
14						48/48		
15	■	Direct Push	11:00	B2 15'	--		GC	Increasing gravel content, clayey GRAVEL with sand (GC), dark grey, saturated, medium dense, fine sub-angular gravel
16								Bottom of Boring at 16 feet bgs.
17								
18								
19								
20								

AEW Engineering, Inc.
55 New Montgomery, Suite 722
San Francisco, CA 94105

Drawn By: RNM	AEW-B2	Project No. 2015-029
Reviewed By: RY		Sheet 1 of 1

DATE DRILLED: 2/23/2016	**Log of Boring:**	**AEW-B3**
DRILLING METHOD: Geoprobe		
HAMMER WEIGHT: NA	DROP: NA	LOGGED BY: RNM
SAMPLER(S): R. Musselman, R. Young		
Surface Conditions: Asphalt		

TIME	
START	FINISH
14:43	15:30

Depth (feet)	Sample	Sample Type	Sample Time	Sample No.	SPT N-value	Inches Driven/ Inches Recovered	U.S.C.S. Classification	
								4" Asphalt
1								
2							SP	SAND (SP), brown, loose sand, some fine sub-angular gravel, trace clay
3	■	Grab	14:51	B3 2.5'	--	--		
4						12/12		
5	■	Direct Push	15:00	B3 5'	--	24/24		
6							SP	Gravelly SAND (SP), trace clay, fine to medium angular gravel
7						24/18		
8								
9								
10	■	Direct Push	15:12	B3 10'	--	48/43	CL	CLAY (CL), soft, wet, brown clay, some fine angular gravel
11								
12								
13								
14						48/40		CLAY (CL), soft, wet, brown clay, some fine to medium angular gravel
15	■	Direct Push	15:16	B3 15'	--		CL	
16								Bottom of Boring at 16 feet bgs.
17								
18								
19								
20								

AEW Engineering, Inc.
55 New Montgomery, Suite 722
San Francisco, CA 94105

Drawn By: RNM	AEW-B3	Project No. 2015-029
Reviewed By: RY		Sheet 1 of 1

DATE DRILLED: 2/23/2016	**Log of Boring:**	**AEW-B4**
DRILLING METHOD: Geoprobe		
HAMMER WEIGHT: NA	DROP: NA	LOGGED BY: RNM
SAMPLER(S): R. Musselman, R. Young		
Surface Conditions: Asphalt		

TIME	
START	FINISH
13:50	14:35

Depth (feet)	Sample	Sample Type	Sample Time	Sample No.	SPT N-value	Inches Driven/ Inches Recovered	U.S.C.S. Classification	
								4" Asphalt, 8" Baserock
1								
2							SP	Gravelly SAND (SP), dark brown, loose sand, fine to medium gravel
3	■	Grab	13:58	B4 2.5'	--	--		
4						12/12		
5	■	Direct Push	14:12	B4 5'	--	24/24		Gravelly SAND (SP), brown-grey, trace clay, fine to medium angular gravel
6							SP	
7						24/20		
8								GRAVEL (GP), medium to coarse, angular
9								
10	■	Direct Push	14:20	B4 10'	--	48/24	GP	GRAVEL (GP), medium, angular, little sand, trace clay, moist, loose, brown
11								
12								
13								
14						48/36		CLAY (CL), soft, brown, trace fine gravel, trace fine sand
15	■	Direct Push	14:22	B4 15'	--		CL	
16								Bottom of Boring at 16 feet bgs.
17								
18								
19								
20								

AEW Engineering, Inc.
55 New Montgomery, Suite 722
San Francisco, CA 94105

Drawn By: RNM	AEW-B4	Project No. 2015-029
Reviewed By: RY		Sheet 1 of 1

DATE DRILLED: 2/23/2016	**Log of Boring:**	**AEW-B5**
DRILLING METHOD: Geoprobe		
HAMMER WEIGHT: NA	DROP: NA	LOGGED BY: RNM
SAMPLER(S): R. Musselman, R. Young		
Surface Conditions: Asphalt		

TIME	
START	FINISH
12:45	13:45

Depth (feet)	Sample	Sample Type	Sample Time	Sample No.	SPT N-value	Inches Driven/ Inches Recovered	U.S.C.S. Classification	
								4" Asphalt, 8" Baserock
1								
2							SP	Clayey SAND with gravel (SC), brown, medium dense, moist, fine to medium gravel, clay
3	■	Grab	12:55	B5 2.5'	--	--		
4								
5	■	Direct Push	13:15	B5 5'	--	24/24	SP	Color change to dark grey, continue clayey sand/gravel, angular gravel
6								
7						24/24		
8								
9								
10	■	Direct Push	13:20	B5 10'	--	48/48		
11								CLAY with sand and gravel (CL), dark grey, saturated, medium stiff, saturated pockets of brown sand, fine angular gravel.
12								
13								
14						48/48		
15	■	Direct Push	13:25	B5 15'	--		CL	
16								Bottom of Boring at 16 feet bgs.
17								
18								
19								
20								

AEW Engineering, Inc.
55 New Montgomery, Suite 722
San Francisco, CA 94105

Drawn By: RNM	AEW-B5	Project No. 2015-029
Reviewed By: RY		Sheet 1 of 1

DATE DRILLED: 2/24/2016	**Log of Boring:**	**AEW-B6**
DRILLING METHOD: Geoprobe		
HAMMER WEIGHT: NA	DROP: NA	LOGGED BY: RNM
SAMPLER(S): R. Musselman, R. Young		
Surface Conditions: Asphalt		

TIME	
START	FINISH
9:36	10:20

Depth (feet)	Sample	Sample Type	Sample Time	Sample No.	SPT N-value	Inches Driven/ Inches Recovered	U.S.C.S. Classification	Description
								2" Asphalt, 6" Baserock
1								
2							GC	Clayey GRAVEL with sand (GC), dark brown, medium dense, moist, fine angular gravel
3	■	Grab	9:20	B6 2.5'	--	--		
4								
5	■	Direct Push	9:50	B6 5'	--	24/24	GC	
6								
7						24/24		
8								
9								
10	■	Direct Push	9:55	B6 10'	--	48/30	SC	Color change to gray, decreasing gravel content
11								clayey SAND with gravel (SC), grey, medium dense, wet, fine to coarse sand, fine gravel
12								
13								
14						48/36		
15	■	Direct Push	10:00	B6 15'	--		SC	
16								Bottom of Boring at 16 feet bgs.
17								
18								
19								
20								

AEW Engineering, Inc.
55 New Montgomery, Suite 722
San Francisco, CA 94105

Drawn By: RNM	AEW-B6	Project No. 2015-029
Reviewed By: RY		Sheet 1 of 1

DATE DRILLED: 2/24/2016	**Log of Boring:**	**AEW-B7**
DRILLING METHOD: Geoprobe		
HAMMER WEIGHT: NA	DROP: NA	LOGGED BY: RNM
SAMPLER(S): R. Musselman, R. Young		TIME
Surface Conditions: Asphalt	START	FINISH
	13:25	14:15

Depth (feet)	Sample	Sample Type	Sample Time	Sample No.	SPT N-value	Inches Driven/ Inches Recovered	U.S.C.S. Classification	
								4" Asphalt, 6" Baserock
1								
2							GC	Clayey GRAVEL with sand (GC), dark brown, medium dense, moist, fine angular gravel
3	■	Grab	13:30	B7 2.5'	--	--		Color change to reddish brown, fine angular gravel
4								
5	■	Direct Push	13:55	B7 5'	--	24/24	GC	
6								
7						24/24		
8								
9								
10	■	Direct Push	14:00	B7 10'	--	48/30	GC	Very gravelly, saturated
11								
12								
13								CLAY with sand (CL), dark grey, medium stiff, saturated, fine to coarse sand, trace fine gravel
14						48/36		
15	■	Direct Push	14:05	B7 15'	--		CL	
16								Bottom of Boring at 16 feet bgs.
17								
18								
19								
20								

AEW Engineering, Inc.
55 New Montgomery, Suite 722
San Francisco, CA 94105

Drawn By: RNM	AEW-B7	Project No. 2015-029
Reviewed By: RY		Sheet 1 of 1

DATE DRILLED: 2/23/2016	**Log of Boring:**	**AEW-B8**
DRILLING METHOD: Geoprobe		
HAMMER WEIGHT: NA	DROP: NA	LOGGED BY: RNM
SAMPLER(S): R. Musselman, R. Young		TIME
Surface Conditions: Asphalt	START	FINISH
	10:30	11:30

Depth (feet)	Sample	Sample Type	Sample Time	Sample No.	SPT N-value	Inches Driven/ Inches Recovered	U.S.C.S. Classification	Description
								6" Asphalt, 8" Baserock
1								
2							SP	SAND with gravel (SP), dark grey, medium dense, moist, fine to coarse angular gravel
3	■	Grab	10:45	B8 2.5'	--	--		
4								SAND with gravel (SP), brown-grey, medium dense, moist, fine to coarse angular gravel
5	■	Direct Push	11:16	B8 5'	--	24/20	SP	
6								
7						24/15		
8								CLAY (CL), grey, soft, damp, trace fine sand
9								
10	■	Direct Push	11:23	B8 10'	--	48/32	CL	
11								
12								
13								
14						48/10		Occasional wood fragments, gravel
15	■	Direct Push	11:28	B8 15'	--		CL	
16								Bottom of Boring at 16 feet bgs.
17								
18								
19								
20								

AEW Engineering, Inc.
55 New Montgomery, Suite 722
San Francisco, CA 94105

Drawn By: RNM	AEW-B8	Project No. 2015-029
Reviewed By: RY		Sheet 1 of 1

DATE DRILLED: 2/24/2016	**Log of Boring:**	**AEW-B9**
DRILLING METHOD: Geoprobe		
HAMMER WEIGHT: NA	DROP: NA	LOGGED BY: RNM
SAMPLER(S): R. Musselman, R. Young		
Surface Conditions: Asphalt		

TIME	
START	FINISH
8:00	9:00

Depth (feet)	Sample	Sample Type	Sample Time	Sample No.	SPT N-value	Inches Driven/ Inches Recovered	U.S.C.S. Classification	Description
								6" Asphalt, 8" Baserock
1								
2								SAND (SP), brown, dry, some fine sub-angular gravel, trace clay
3	■	Grab	8:03	B9 2.5'	--	-- 12/12		
4								SAND with gravel (SP), fine to medium sub-angular gravel, trace clay
5	■	Direct Push	8:19	B9 5'	--	24/20		
6							CL	CLAY (CL), grey-brown, with gravel, trace fine sand, fine to medium angular gravel
7						24/24		
8								
9								
10	■	Direct Push	8:30	B9 10'	--	48/38	CL	
11								Grey-brown CLAY with gravel (CL), fine to medium angular gravel
12								
13								
14						48/30		
15	■	Direct Push	8:340	B9 15'	--		CL	
16								Bottom of Boring at 16 feet bgs.
17								
18								
19								
20								

AEW Engineering, Inc.
55 New Montgomery, Suite 722
San Francisco, CA 94105

Drawn By: RNM	AEW-B9	Project No. 2015-029
Reviewed By: RY		Sheet 1 of 1

DATE DRILLED: 2/25/2016	**Log of Boring:**	**AEW-B10**
DRILLING METHOD: Geoprobe		
HAMMER WEIGHT: NA	DROP: NA	LOGGED BY: RNM
SAMPLER(S): R. Musselman, R. Young		
Surface Conditions: Asphalt		

TIME	
START	FINISH
7:46	8:21

Depth (feet)	Sample	Sample Type	Sample Time	Sample No.	SPT N-value	Inches Driven/ Inches Recovered	U.S.C.S. Classification	
								4" Asphalt, 8" Baserock
1								
2								SAND (SP), little gravel, trace clay, fine, brown-black, damp, sub-angular fine gravel
3	■	Grab	7:51	B10 2.5'	--	--	SP	
4								
5	■	Direct Push	8:02	B10 5'	--		SP	SAND with gravel (SP), fine, brown, fine to medium angular gravel, trace clay, Saturated change to little clay
6								
7						36/32		
8								CLAY (CL), brown, wet, soft clay, little fine sand, little fine gravel
9								
10	■	Direct Push	8:11	B10 10'	--	48/30	CL	CLAY with gravel (CL), soft, grey-brown clay, fine angular gravel, little sand, wet.
11								
12								
13								
14						48/26		
15	■	Direct Push	8:18	B10 15'	--		CL	Transition to trace gravel
16								Bottom of Boring at 16 feet bgs.
17								
18								
19								
20								

AEW Engineering, Inc.
55 New Montgomery, Suite 722
San Francisco, CA 94105

Drawn By: RNM	AEW-B10	Project No. 2015-029
Reviewed By: RY		Sheet 1 of 1

DATE DRILLED: 2/25/2016	**Log of Boring:**	**AEW-B11**
DRILLING METHOD: Geoprobe		
HAMMER WEIGHT: NA	DROP: NA	LOGGED BY: RNM
SAMPLER(S): R. Musselman, R. Young		
Surface Conditions: Asphalt		

TIME	
START	FINISH
8:40	9:40

Depth (feet)	Sample	Sample Type	Sample Time	Sample No.	SPT N-value	Inches Driven/ Inches Recovered	U.S.C.S. Classification	Description
								4" Asphalt, 8" Baserock
1								
2								SAND (SP),fine, poorly-sorted, brown, some fine sub-angular gravel, little clay
3	■	Grab	8:46	B11 2.5'	--	--	SP	
4								CLAY (CL), grey, soft, trace coarse sand, little fine angular gravel
5	■	Direct Push	8:54	B11 5'	--	24/24	CL	
6								CLAY (CL), red-brown, soft, some fine sand, trace coarse sand, some fine angular gravel
7						24/20		
8								
9								
10	■	Direct Push	9:06	B11 10'	--	48/19	CL	
11								
12								wood debris
13								
14						48/45		CLAY (CL), soft, grey clay
15	■	Direct Push	9:11	B11 15'	--		CL	Transition to trace gravel
16								Bottom of Boring at 16 feet bgs.
17								
18								
19								
20								

AEW Engineering, Inc.
55 New Montgomery, Suite 722
San Francisco, CA 94105

Drawn By: RNM	AEW-B11	Project No. 2015-029
Reviewed By: RY		Sheet 1 of 1

DATE DRILLED: 2/24/2016	**Log of Boring:**	**AEW-B12**
DRILLING METHOD: Geoprobe		
HAMMER WEIGHT: NA	DROP: NA	LOGGED BY: RNM
SAMPLER(S): R. Musselman, R. Young		TIME
Surface Conditions: Asphalt	START	FINISH
	14:30	15:30

Depth (feet)	Sample	Sample Type	Sample Time	Sample No.	SPT N-value	Inches Driven/ Inches Recovered	U.S.C.S. Classification	
								4" Asphalt, 8" Baserock
1								
2								GRAVEL (GC), little fine sand, trace clay, sub-angular fine to medium gravel
3	■	Grab	14:41	B12 2.5'	--	--	GC	transition to medium gravel
4						12/8		
5	■	Direct Push	14:48	B12 5'	--	24/6	GC	transition to fine to medium gravel
6								
7						24/5		GRAVEL (GC), brown-grey, wet, little fine sand, trace clay, sub-angular fine to medium gravel
8								
9								
10	■	Direct Push	14:57	B12 10'	--	48/20	GC	GRAVEL with clay (GC), wet, grey, loose, soft clay, fine to medium angular gravel
11								GRAVEL with clay (GC), wet, grey, loose, soft clay, fine to medium angular gravel, trace fine sand
12								
13							SC	SAND with gravel (SC), some soft clay, grey, wet, fine sand, fine to medium gravel
14						48/36		
15	■	Direct Push	15:08	B12 15'	--		CL	CLAY (CL), Little fine sand, little fine sub-angular gravel, grey, wet CLAY (CL), grey-green, soft, wet, clay
16								Bottom of Boring at 16 feet bgs.
17								
18								
19								
20								

AEW Engineering, Inc.
55 New Montgomery, Suite 722
San Francisco, CA 94105

Drawn By: RNM	AEW-B12	Project No. 2015-029
Reviewed By: RY		Sheet 1 of 1

DATE DRILLED: 2/23/2016	**Log of Boring:**	**AEW-B13**
DRILLING METHOD: Geoprobe		
HAMMER WEIGHT: NA	DROP: NA	LOGGED BY: RY
SAMPLER(S): R. Musselman, R. Young		
Surface Conditions: Asphalt		

TIME	
START	FINISH
8:45	10:00

Depth (feet)	Sample	Sample Type	Sample Time	Sample No.	SPT N-value	Inches Driven/ Inches Recovered	U.S.C.S. Classification	
								3" Asphalt, 12" Baserock
1								
2							GP	GRAVEL with sand (GP), grey, medium dense, fine angular gravel
3	■	Grab	9:06	B13 2.5'	--	--		
4							CL	CLAY with sand and gravel (CL), reddish brown, stiff, moist, fine sand, occasional fine gravel
5	■	Direct Push	9:34	B13 5'	--	24/24		color change to grey
6								
7						24/24	ML	Silt (ML), brown, medium stiff, moist
8								
9								
10	■	Direct Push	9:40	B13 10'	--	48/36	CH	CLAY (CH), grey, soft, moist to wet, young bay mud
11								
12								
13							CL	Gravelly CLAY (CL), grey, saturated, medium dense, fine sub-angular gravel
14						48/30		
15	■	Direct Push	9:45	B13 15'	--			
16								Bottom of Boring at 16 feet bgs.
17								
18								
19								
20								

AEW Engineering, Inc.
55 New Montgomery, Suite 722
San Francisco, CA 94105

Drawn By: RNM	AEW-B13	Project No. 2015-029
Reviewed By: RY		Sheet 1 of 1

DATE DRILLED: 2/25/2016	**Log of Boring:**	**AEW-B14**
DRILLING METHOD: Geoprobe		
HAMMER WEIGHT: NA	DROP: NA	LOGGED BY: RY
SAMPLER(S): R. Musselman, R. Young		
Surface Conditions: Asphalt		

TIME	
START	FINISH
9:50	10:45

Depth (feet)	Sample	Sample Type	Sample Time	Sample No.	SPT N-value	Inches Driven/ Inches Recovered	U.S.C.S. Classification	
								3" Asphalt, 8" Baserock
1								
2							SP	SAND (SP), brown, damp, poorly-sorted, trace clay, some fine sub-angular gravel
3	■	Grab	10:00	B14 2.5'	--	--		
4								
5	■	Direct Push	10:04	B14 5'	--	24/21		
6							CL	CLAY with gravel (CL), soft, grey-brown clay, trace fine sand, fine angular gravel
7						24/22		Transition to little fine sand, wet
8								
9								
10	■	Direct Push	10:22	B14 10'	--	48/23	GP	GRAVEL (GP), some clay, trace fine sand, fine to mediu angular grey gravel, wet
11								
12								
13								
14						48/20		
15	■	Direct Push	10:30	B14 15'	--			
16								Bottom of Boring at 16 feet bgs.
17								
18								
19								
20								

AEW Engineering, Inc.
55 New Montgomery, Suite 722
San Francisco, CA 94105

Drawn By: RNM	AEW-B14	Project No. 2015-029
Reviewed By: RY		Sheet 1 of 1

APPENDIX C

LABORATORY REPORTS

McCampbell Analytical, Inc.

"When Quality Counts"

Analytical Report

WorkOrder: 1602A52

Report Created for: AEW Engineering, Inc.

55 New Montgomery St, Ste 722
San Francisco, CA 94105

Project Contact: Randy Young
Project P.O.:
Project Name: 2015-29; Sausalito Gate 5 Characterization

Project Received: 02/25/2016

Analytical Report reviewed & approved for release on 03/03/2016 by:

Angela Rydelius,
Laboratory Manager

The report shall not be reproduced except in full, without the written approval of the laboratory. The analytical results relate only to the items tested. Results reported conform to the most current NELAP standards, where applicable, unless otherwise stated in the case narrative.

McCampbell Analytical, Inc.
"When Quality Counts"

1534 Willow Pass Road, Pittsburg, CA 94565-1701
Toll Free Telephone: (877) 252-9262 / Fax: (925) 252-9269
http://www.mccampbell.com / E-mail: main@mccampbell.com

Glossary of Terms & Qualifier Definitions

Client: AEW Engineering, Inc.
Project: 2015-29; Sausalito Gate 5 Characterization
WorkOrder: 1602A52

Glossary Abbreviation

95% Interval	95% Confident Interval
DF	Dilution Factor
DI WET	(DISTLC) Waste Extraction Test using DI water
DISS	Dissolved (direct analysis of 0.45 µm filtered and acidified water sample)
DLT	Dilution Test
DUP	Duplicate
EDL	Estimated Detection Limit
ITEF	International Toxicity Equivalence Factor
LCS	Laboratory Control Sample
MB	Method Blank
MB % Rec	% Recovery of Surrogate in Method Blank, if applicable
MDL	Method Detection Limit
ML	Minimum Level of Quantitation
MS	Matrix Spike
MSD	Matrix Spike Duplicate
N/A	Not Applicable
ND	Not detected at or above the indicated MDL or RL
NR	Data Not Reported due to matrix interference or insufficient sample amount.
PDS	Post Digestion Spike
PDSD	Post Digestion Spike Duplicate
PF	Prep Factor
RD	Relative Difference
RL	Reporting Limit (The RL is the lowest calibration standard in a multipoint calibration.)
RPD	Relative Percent Deviation
RRT	Relative Retention Time
SPK Val	Spike Value
SPKRef Val	Spike Reference Value
SPLP	Synthetic Precipitation Leachate Procedure
ST	Sorbent Tube
TCLP	Toxicity Characteristic Leachate Procedure
TEQ	Toxicity Equivalents
WET (STLC)	Waste Extraction Test (Soluble Threshold Limit Concentration)

McCampbell Analytical, Inc.
"When Quality Counts"

1534 Willow Pass Road, Pittsburg, CA 94565-1701
Toll Free Telephone: (877) 252-9262 / Fax: (925) 252-9269
http://www.mccampbell.com / E-mail: main@mccampbell.com

Glossary of Terms & Qualifier Definitions

Client: AEW Engineering, Inc.
Project: 2015-29; Sausalito Gate 5 Characterization
WorkOrder: 1602A52

Analytical Qualifiers

J	Result is less than the RL/ML but greater than the MDL. The reported concentration is an estimated value.
S	Surrogate spike recovery outside accepted recovery limits
a3	sample diluted due to high organic content.
c2	surrogate recovery outside of the control limits due to matrix interference.
d7	strongly aged gasoline or diesel range compounds are significant in the TPH(g) chromatogram
d9	no recognizable pattern
e2	diesel range compounds are significant; no recognizable pattern
e6	one to a few isolated peaks present in the TPH(d/mo) chromatogram
e7	oil range compounds are significant
e8	kerosene/kerosene range/jet fuel range
h4	sulfuric acid permanganate (EPA 3665) cleanup

Quality Control Qualifiers

F8	MS/MSD recovery and/or RPD was out of acceptance criteria; PDS validated the prep batch. If PDS recovery was out of acceptance criteria, DLT validated the prep batch.
F9	MS/MSD recovery and/or RPD was out of acceptance criteria; DLT validated the prep batch.

McCampbell Analytical, Inc.
"When Quality Counts"

1534 Willow Pass Road, Pittsburg, CA 94565-1701
Toll Free Telephone: (877) 252-9262 / Fax: (925) 252-9269
http://www.mccampbell.com / E-mail: main@mccampbell.com

Analytical Report

Client:	AEW Engineering, Inc.	**WorkOrder:**	1602A52
Date Received:	2/25/16 16:16	**Extraction Method:**	SW3550B
Date Prepared:	2/25/16	**Analytical Method:**	SW8082
Project:	2015-29; Sausalito Gate 5 Characterization	**Unit:**	mg/kg

Polychlorinated Biphenyls (PCBs) Aroclors

Client ID	Lab ID	Matrix	Date Collected	Instrument	Batch ID
COMP AEW-B1,B2 2.5-5'	**1602A52-001A**	**Soil**	**02/24/2016**	**GC5A**	**117229**

Analytes	Result	MDL	RL	DF	Date Analyzed
Aroclor1016	ND	0.0051	0.050	1	02/26/2016 19:06
Aroclor1221	ND	0.033	0.050	1	02/26/2016 19:06
Aroclor1232	ND	0.0032	0.050	1	02/26/2016 19:06
Aroclor1242	ND	0.0035	0.050	1	02/26/2016 19:06
Aroclor1248	ND	0.0036	0.050	1	02/26/2016 19:06
Aroclor1254	ND	0.0022	0.050	1	02/26/2016 19:06
Aroclor1260	ND	0.0085	0.050	1	02/26/2016 19:06
PCBs, total	ND	0.033	0.050	1	02/26/2016 19:06

Surrogates	REC (%)	Limits	
Decachlorobiphenyl	93	70-130	02/26/2016 19:06

Analyst(s): SS Analytical Comments: h4

Client ID	Lab ID	Matrix	Date Collected	Instrument	Batch ID
COMP AEW-B3,B4 2.5-5'	**1602A52-003A**	**Soil**	**02/23/2016**	**GC5A**	**117229**

Analytes	Result	Qualifiers	MDL	RL	DF	Date Analyzed
Aroclor1016	ND		0.0051	0.050	1	02/29/2016 16:00
Aroclor1221	ND		0.033	0.050	1	02/29/2016 16:00
Aroclor1232	ND		0.0032	0.050	1	02/29/2016 16:00
Aroclor1242	ND		0.0035	0.050	1	02/29/2016 16:00
Aroclor1248	ND		0.0036	0.050	1	02/29/2016 16:00
Aroclor1254	ND		0.0022	0.050	1	02/29/2016 16:00
Aroclor1260	**0.036**	J	0.0085	0.050	1	02/29/2016 16:00
PCBs, total	**0.036**	J	0.033	0.050	1	02/29/2016 16:00

Surrogates	REC (%)	Limits	
Decachlorobiphenyl	88	70-130	02/29/2016 16:00

Analyst(s): SS Analytical Comments: h4

(Cont.)

McCampbell Analytical, Inc.
"When Quality Counts"

1534 Willow Pass Road, Pittsburg, CA 94565-1701
Toll Free Telephone: (877) 252-9262 / Fax: (925) 252-9269
http://www.mccampbell.com / E-mail: main@mccampbell.com

Analytical Report

Client:	AEW Engineering, Inc.	**WorkOrder:**	1602A52
Date Received:	2/25/16 16:16	**Extraction Method:**	SW3550B
Date Prepared:	2/25/16	**Analytical Method:**	SW8082
Project:	2015-29; Sausalito Gate 5 Characterization	**Unit:**	mg/kg

Polychlorinated Biphenyls (PCBs) Aroclors

Client ID	Lab ID	Matrix	Date Collected	Instrument	Batch ID
COMP AEW-B3,4 10-15'	1602A52-004A	Soil	02/23/2016	GC5A	117229

Analytes	Result	MDL	RL	DF	Date Analyzed
Aroclor1016	ND	0.0051	0.050	1	02/26/2016 20:21
Aroclor1221	ND	0.033	0.050	1	02/26/2016 20:21
Aroclor1232	ND	0.0032	0.050	1	02/26/2016 20:21
Aroclor1242	ND	0.0035	0.050	1	02/26/2016 20:21
Aroclor1248	ND	0.0036	0.050	1	02/26/2016 20:21
Aroclor1254	ND	0.0022	0.050	1	02/26/2016 20:21
Aroclor1260	ND	0.0085	0.050	1	02/26/2016 20:21
PCBs, total	ND	0.033	0.050	1	02/26/2016 20:21

Surrogates	REC (%)	Limits	
Decachlorobiphenyl	95	70-130	02/26/2016 20:21

Analyst(s): SS Analytical Comments: h4

Client ID	Lab ID	Matrix	Date Collected	Instrument	Batch ID
COMP AEW-B5,B11 2.5-5'	1602A52-005A	Soil	02/25/2016	GC5A	117229

Analytes	Result	MDL	RL	DF	Date Analyzed
Aroclor1016	ND	0.0051	0.050	1	02/29/2016 14:06
Aroclor1221	ND	0.033	0.050	1	02/29/2016 14:06
Aroclor1232	ND	0.0032	0.050	1	02/29/2016 14:06
Aroclor1242	ND	0.0035	0.050	1	02/29/2016 14:06
Aroclor1248	ND	0.0036	0.050	1	02/29/2016 14:06
Aroclor1254	ND	0.0022	0.050	1	02/29/2016 14:06
Aroclor1260	ND	0.0085	0.050	1	02/29/2016 14:06
PCBs, total	ND	0.033	0.050	1	02/29/2016 14:06

Surrogates	REC (%)	Limits	
Decachlorobiphenyl	94	70-130	02/29/2016 14:06

Analyst(s): SS Analytical Comments: h4

(Cont.)

McCampbell Analytical, Inc.
"When Quality Counts"

1534 Willow Pass Road, Pittsburg, CA 94565-1701
Toll Free Telephone: (877) 252-9262 / Fax: (925) 252-9269
http://www.mccampbell.com / E-mail: main@mccampbell.com

Analytical Report

Client:	AEW Engineering, Inc.	**WorkOrder:**	1602A52
Date Received:	2/25/16 16:16	**Extraction Method:**	SW3550B
Date Prepared:	2/25/16	**Analytical Method:**	SW8082
Project:	2015-29; Sausalito Gate 5 Characterization	**Unit:**	mg/kg

Polychlorinated Biphenyls (PCBs) Aroclors

Client ID	Lab ID	Matrix	Date Collected	Instrument	Batch ID
COMP AEW-B5,B11 10-15'	1602A52-006A	Soil	02/25/2016	GC5A	117229

Analytes	Result	MDL	RL	DF	Date Analyzed
Aroclor1016	ND	0.0051	0.050	1	02/26/2016 20:59
Aroclor1221	ND	0.033	0.050	1	02/26/2016 20:59
Aroclor1232	ND	0.0032	0.050	1	02/26/2016 20:59
Aroclor1242	ND	0.0035	0.050	1	02/26/2016 20:59
Aroclor1248	ND	0.0036	0.050	1	02/26/2016 20:59
Aroclor1254	ND	0.0022	0.050	1	02/26/2016 20:59
Aroclor1260	ND	0.0085	0.050	1	02/26/2016 20:59
PCBs, total	ND	0.033	0.050	1	02/26/2016 20:59

Surrogates	REC (%)	Limits	
Decachlorobiphenyl	89	70-130	02/26/2016 20:59

Analyst(s): SS Analytical Comments: h4

Client ID	Lab ID	Matrix	Date Collected	Instrument	Batch ID
COMP AEW-B6,B7 2.5-5'	1602A52-007A	Soil	02/24/2016	GC5A	117229

Analytes	Result	MDL	RL	DF	Date Analyzed
Aroclor1016	ND	0.0051	0.050	1	02/29/2016 13:28
Aroclor1221	ND	0.033	0.050	1	02/29/2016 13:28
Aroclor1232	ND	0.0032	0.050	1	02/29/2016 13:28
Aroclor1242	ND	0.0035	0.050	1	02/29/2016 13:28
Aroclor1248	ND	0.0036	0.050	1	02/29/2016 13:28
Aroclor1254	ND	0.0022	0.050	1	02/29/2016 13:28
Aroclor1260	ND	0.0085	0.050	1	02/29/2016 13:28
PCBs, total	ND	0.033	0.050	1	02/29/2016 13:28

Surrogates	REC (%)	Limits	
Decachlorobiphenyl	93	70-130	02/29/2016 13:28

Analyst(s): SS Analytical Comments: h4

(Cont.)

McCampbell Analytical, Inc.
"When Quality Counts"

1534 Willow Pass Road, Pittsburg, CA 94565-1701
Toll Free Telephone: (877) 252-9262 / Fax: (925) 252-9269
http://www.mccampbell.com / E-mail: main@mccampbell.com

Analytical Report

Client:	AEW Engineering, Inc.	**WorkOrder:**	1602A52
Date Received:	2/25/16 16:16	**Extraction Method:**	SW3550B
Date Prepared:	2/25/16	**Analytical Method:**	SW8082
Project:	2015-29; Sausalito Gate 5 Characterization	**Unit:**	mg/kg

Polychlorinated Biphenyls (PCBs) Aroclors

Client ID	Lab ID	Matrix	Date Collected	Instrument	Batch ID
COMP AEW-B6,B7 10-15'	**1602A52-008A**	**Soil**	**02/24/2016**	**GC5A**	**117229**

Analytes	Result	MDL	RL	DF	Date Analyzed
Aroclor1016	ND	0.0051	0.050	1	02/26/2016 21:37
Aroclor1221	ND	0.033	0.050	1	02/26/2016 21:37
Aroclor1232	ND	0.0032	0.050	1	02/26/2016 21:37
Aroclor1242	ND	0.0035	0.050	1	02/26/2016 21:37
Aroclor1248	ND	0.0036	0.050	1	02/26/2016 21:37
Aroclor1254	ND	0.0022	0.050	1	02/26/2016 21:37
Aroclor1260	ND	0.0085	0.050	1	02/26/2016 21:37
PCBs, total	ND	0.033	0.050	1	02/26/2016 21:37

Surrogates	REC (%)	Limits	
Decachlorobiphenyl	92	70-130	02/26/2016 21:37

Analyst(s): SS Analytical Comments: h4

Client ID	Lab ID	Matrix	Date Collected	Instrument	Batch ID
COMP AEW-B8,B9 2.5-5'	**1602A52-009A**	**Soil**	**02/24/2016**	**GC5A**	**117229**

Analytes	Result	MDL	RL	DF	Date Analyzed
Aroclor1016	ND	0.0051	0.050	1	02/29/2016 12:50
Aroclor1221	ND	0.033	0.050	1	02/29/2016 12:50
Aroclor1232	ND	0.0032	0.050	1	02/29/2016 12:50
Aroclor1242	ND	0.0035	0.050	1	02/29/2016 12:50
Aroclor1248	ND	0.0036	0.050	1	02/29/2016 12:50
Aroclor1254	ND	0.0022	0.050	1	02/29/2016 12:50
Aroclor1260	ND	0.0085	0.050	1	02/29/2016 12:50
PCBs, total	ND	0.033	0.050	1	02/29/2016 12:50

Surrogates	REC (%)	Limits	
Decachlorobiphenyl	92	70-130	02/29/2016 12:50

Analyst(s): SS Analytical Comments: h4

(Cont.)

McCampbell Analytical, Inc.
"When Quality Counts"

1534 Willow Pass Road, Pittsburg, CA 94565-1701
Toll Free Telephone: (877) 252-9262 / Fax: (925) 252-9269
http://www.mccampbell.com / E-mail: main@mccampbell.com

Analytical Report

Client:	AEW Engineering, Inc.	**WorkOrder:**	1602A52
Date Received:	2/25/16 16:16	**Extraction Method:**	SW3550B
Date Prepared:	2/25/16	**Analytical Method:**	SW8082
Project:	2015-29; Sausalito Gate 5 Characterization	**Unit:**	mg/kg

Polychlorinated Biphenyls (PCBs) Aroclors

Client ID	Lab ID	Matrix	Date Collected	Instrument	Batch ID
COMP AEW-B8,B9 10-15'	**1602A52-010A**	**Soil**	**02/24/2016**	**GC5A**	**117229**

Analytes	Result	MDL	RL	DF	Date Analyzed
Aroclor1016	ND	0.0051	0.050	1	02/26/2016 22:15
Aroclor1221	ND	0.033	0.050	1	02/26/2016 22:15
Aroclor1232	ND	0.0032	0.050	1	02/26/2016 22:15
Aroclor1242	ND	0.0035	0.050	1	02/26/2016 22:15
Aroclor1248	ND	0.0036	0.050	1	02/26/2016 22:15
Aroclor1254	ND	0.0022	0.050	1	02/26/2016 22:15
Aroclor1260	ND	0.0085	0.050	1	02/26/2016 22:15
PCBs, total	ND	0.033	0.050	1	02/26/2016 22:15

Surrogates	REC (%)	Limits	
Decachlorobiphenyl	92	70-130	02/26/2016 22:15

Analyst(s): SS Analytical Comments: h4

Client ID	Lab ID	Matrix	Date Collected	Instrument	Batch ID
COMP AEW-B10,B13 2.5-5'	**1602A52-011A**	**Soil**	**02/25/2016**	**GC5A**	**117229**

Analytes	Result	MDL	RL	DF	Date Analyzed
Aroclor1016	ND	0.0051	0.050	1	02/29/2016 16:38
Aroclor1221	ND	0.033	0.050	1	02/29/2016 16:38
Aroclor1232	ND	0.0032	0.050	1	02/29/2016 16:38
Aroclor1242	ND	0.0035	0.050	1	02/29/2016 16:38
Aroclor1248	ND	0.0036	0.050	1	02/29/2016 16:38
Aroclor1254	ND	0.0022	0.050	1	02/29/2016 16:38
Aroclor1260	ND	0.0085	0.050	1	02/29/2016 16:38
PCBs, total	ND	0.033	0.050	1	02/29/2016 16:38

Surrogates	REC (%)	Limits	
Decachlorobiphenyl	94	70-130	02/29/2016 16:38

Analyst(s): SS Analytical Comments: h4

(Cont.)

McCampbell Analytical, Inc.
"When Quality Counts"

1534 Willow Pass Road, Pittsburg, CA 94565-1701
Toll Free Telephone: (877) 252-9262 / Fax: (925) 252-9269
http://www.mccampbell.com / E-mail: main@mccampbell.com

Analytical Report

Client:	AEW Engineering, Inc.	**WorkOrder:**	1602A52
Date Received:	2/25/16 16:16	**Extraction Method:**	SW3550B
Date Prepared:	2/25/16	**Analytical Method:**	SW8082
Project:	2015-29; Sausalito Gate 5 Characterization	**Unit:**	mg/kg

Polychlorinated Biphenyls (PCBs) Aroclors

Client ID	Lab ID	Matrix	Date Collected	Instrument	Batch ID
COMP AEW-B10,B13 10-15'	**1602A52-012A**	**Soil**	**02/25/2016**	**GC5A**	**117229**

Analytes	Result	MDL	RL	DF	Date Analyzed
Aroclor1016	ND	0.0051	0.050	1	02/26/2016 22:52
Aroclor1221	ND	0.033	0.050	1	02/26/2016 22:52
Aroclor1232	ND	0.0032	0.050	1	02/26/2016 22:52
Aroclor1242	ND	0.0035	0.050	1	02/26/2016 22:52
Aroclor1248	ND	0.0036	0.050	1	02/26/2016 22:52
Aroclor1254	ND	0.0022	0.050	1	02/26/2016 22:52
Aroclor1260	ND	0.0085	0.050	1	02/26/2016 22:52
PCBs, total	ND	0.033	0.050	1	02/26/2016 22:52

Surrogates	REC (%)	Limits	
Decachlorobiphenyl	102	70-130	02/26/2016 22:52

Analyst(s): SS Analytical Comments: h4

Client ID	Lab ID	Matrix	Date Collected	Instrument	Batch ID
COMP AEW-B12,B14 2.5-5'	**1602A52-013A**	**Soil**	**02/25/2016**	**GC5A**	**117229**

Analytes	Result	MDL	RL	DF	Date Analyzed
Aroclor1016	ND	0.0051	0.050	1	02/26/2016 23:30
Aroclor1221	ND	0.033	0.050	1	02/26/2016 23:30
Aroclor1232	ND	0.0032	0.050	1	02/26/2016 23:30
Aroclor1242	ND	0.0035	0.050	1	02/26/2016 23:30
Aroclor1248	ND	0.0036	0.050	1	02/26/2016 23:30
Aroclor1254	ND	0.0022	0.050	1	02/26/2016 23:30
Aroclor1260	ND	0.0085	0.050	1	02/26/2016 23:30
PCBs, total	ND	0.033	0.050	1	02/26/2016 23:30

Surrogates	REC (%)	Limits	
Decachlorobiphenyl	97	70-130	02/26/2016 23:30

Analyst(s): SS Analytical Comments: h4

(Cont.)

McCampbell Analytical, Inc.
"When Quality Counts"

1534 Willow Pass Road, Pittsburg, CA 94565-1701
Toll Free Telephone: (877) 252-9262 / Fax: (925) 252-9269
http://www.mccampbell.com / E-mail: main@mccampbell.com

Analytical Report

Client:	AEW Engineering, Inc.	**WorkOrder:**	1602A52
Date Received:	2/25/16 16:16	**Extraction Method:**	SW3550B
Date Prepared:	2/25/16	**Analytical Method:**	SW8082
Project:	2015-29; Sausalito Gate 5 Characterization	**Unit:**	mg/kg

Polychlorinated Biphenyls (PCBs) Aroclors

Client ID	Lab ID	Matrix	Date Collected	Instrument	Batch ID
COMP AEW-B12,B14 10-15'	1602A52-014A	Soil	02/25/2016	GC5A	117252

Analytes	Result	MDL	RL	DF	Date Analyzed
Aroclor1016	ND	0.0051	0.050	1	02/26/2016 17:12
Aroclor1221	ND	0.033	0.050	1	02/26/2016 17:12
Aroclor1232	ND	0.0032	0.050	1	02/26/2016 17:12
Aroclor1242	ND	0.0035	0.050	1	02/26/2016 17:12
Aroclor1248	ND	0.0036	0.050	1	02/26/2016 17:12
Aroclor1254	ND	0.0022	0.050	1	02/26/2016 17:12
Aroclor1260	ND	0.0085	0.050	1	02/26/2016 17:12
PCBs, total	ND	0.033	0.050	1	02/26/2016 17:12

Surrogates	REC (%)	Limits	
Decachlorobiphenyl	100	70-130	02/26/2016 17:12

Analyst(s): SS

Analytical Comments: h4

McCampbell Analytical, Inc.
"When Quality Counts"

1534 Willow Pass Road, Pittsburg, CA 94565-1701
Toll Free Telephone: (877) 252-9262 / Fax: (925) 252-9269
http://www.mccampbell.com / E-mail: main@mccampbell.com

Analytical Report

Client:	AEW Engineering, Inc.	**WorkOrder:**	1602A52
Date Received:	2/25/16 16:16	**Extraction Method:**	SW3550B/3630C
Date Prepared:	3/2/16	**Analytical Method:**	SW8082
Project:	2015-29; Sausalito Gate 5 Characterization	**Unit:**	mg/kg

Polychlorinated Biphenyls (PCBs) Aroclors w/ Column Style Clean-Up

Client ID	Lab ID	Matrix	Date Collected	Instrument	Batch ID
COMP AEW-B1,B2 10-15'	1602A52-002A	Soil	02/24/2016	GC5A	117411

Analytes	Result	MDL	RL	DF	Date Analyzed
Aroclor1016	ND	0.0051	0.050	1	03/01/2016 18:38
Aroclor1221	ND	0.011	0.050	1	03/01/2016 18:38
Aroclor1232	ND	0.0063	0.050	1	03/01/2016 18:38
Aroclor1242	ND	0.0067	0.050	1	03/01/2016 18:38
Aroclor1248	ND	0.0040	0.050	1	03/01/2016 18:38
Aroclor1254	ND	0.0068	0.050	1	03/01/2016 18:38
Aroclor1260	ND	0.0061	0.050	1	03/01/2016 18:38
PCBs, total	ND	0.0040	0.050	1	03/01/2016 18:38

Surrogates	REC (%)	Limits	
Decachlorobiphenyl	104	70-130	03/01/2016 18:38

Analyst(s): SS

Analytical Comments: h4

McCampbell Analytical, Inc.
"When Quality Counts"

1534 Willow Pass Road, Pittsburg, CA 94565-1701
Toll Free Telephone: (877) 252-9262 / Fax: (925) 252-9269
http://www.mccampbell.com / E-mail: main@mccampbell.com

Analytical Report

Client:	AEW Engineering, Inc.	**WorkOrder:**	1602A52
Date Received:	2/25/16 16:16	**Extraction Method:**	SW5030B
Date Prepared:	2/25/16-3/1/16	**Analytical Method:**	SW8260B
Project:	2015-29; Sausalito Gate 5 Characterization	**Unit:**	mg/kg

Volatile Organics by P&T and GC/MS (Basic Target List)

Client ID	Lab ID	Matrix	Date Collected	Instrument	Batch ID
COMP AEW-B1,B2 2.5-5'	1602A52-001A	Soil	02/24/2016	GC16	117384

Analytes	Result	RL	DF	Date Analyzed
Acetone	ND	0.10	1	03/01/2016 16:13
tert-Amyl methyl ether (TAME)	ND	0.0050	1	03/01/2016 16:13
Benzene	ND	0.0050	1	03/01/2016 16:13
Bromobenzene	ND	0.0050	1	03/01/2016 16:13
Bromochloromethane	ND	0.0050	1	03/01/2016 16:13
Bromodichloromethane	ND	0.0050	1	03/01/2016 16:13
Bromoform	ND	0.0050	1	03/01/2016 16:13
Bromomethane	ND	0.0050	1	03/01/2016 16:13
2-Butanone (MEK)	ND	0.020	1	03/01/2016 16:13
t-Butyl alcohol (TBA)	ND	0.050	1	03/01/2016 16:13
n-Butyl benzene	ND	0.0050	1	03/01/2016 16:13
sec-Butyl benzene	ND	0.0050	1	03/01/2016 16:13
tert-Butyl benzene	ND	0.0050	1	03/01/2016 16:13
Carbon Disulfide	ND	0.0050	1	03/01/2016 16:13
Carbon Tetrachloride	ND	0.0050	1	03/01/2016 16:13
Chlorobenzene	ND	0.0050	1	03/01/2016 16:13
Chloroethane	ND	0.0050	1	03/01/2016 16:13
Chloroform	ND	0.0050	1	03/01/2016 16:13
Chloromethane	ND	0.0050	1	03/01/2016 16:13
2-Chlorotoluene	ND	0.0050	1	03/01/2016 16:13
4-Chlorotoluene	ND	0.0050	1	03/01/2016 16:13
Dibromochloromethane	ND	0.0050	1	03/01/2016 16:13
1,2-Dibromo-3-chloropropane	ND	0.0040	1	03/01/2016 16:13
1,2-Dibromoethane (EDB)	ND	0.0040	1	03/01/2016 16:13
Dibromomethane	ND	0.0050	1	03/01/2016 16:13
1,2-Dichlorobenzene	ND	0.0050	1	03/01/2016 16:13
1,3-Dichlorobenzene	ND	0.0050	1	03/01/2016 16:13
1,4-Dichlorobenzene	ND	0.0050	1	03/01/2016 16:13
Dichlorodifluoromethane	ND	0.0050	1	03/01/2016 16:13
1,1-Dichloroethane	ND	0.0050	1	03/01/2016 16:13
1,2-Dichloroethane (1,2-DCA)	ND	0.0040	1	03/01/2016 16:13
1,1-Dichloroethene	ND	0.0050	1	03/01/2016 16:13
cis-1,2-Dichloroethene	ND	0.0050	1	03/01/2016 16:13
trans-1,2-Dichloroethene	ND	0.0050	1	03/01/2016 16:13
1,2-Dichloropropane	ND	0.0050	1	03/01/2016 16:13
1,3-Dichloropropane	ND	0.0050	1	03/01/2016 16:13
2,2-Dichloropropane	ND	0.0050	1	03/01/2016 16:13

(Cont.)

McCampbell Analytical, Inc.
"When Quality Counts"

1534 Willow Pass Road, Pittsburg, CA 94565-1701
Toll Free Telephone: (877) 252-9262 / Fax: (925) 252-9269
http://www.mccampbell.com / E-mail: main@mccampbell.com

Analytical Report

Client:	AEW Engineering, Inc.	**WorkOrder:**	1602A52
Date Received:	2/25/16 16:16	**Extraction Method:**	SW5030B
Date Prepared:	2/25/16-3/1/16	**Analytical Method:**	SW8260B
Project:	2015-29; Sausalito Gate 5 Characterization	**Unit:**	mg/kg

Volatile Organics by P&T and GC/MS (Basic Target List)

Client ID	Lab ID	Matrix	Date Collected	Instrument	Batch ID
COMP AEW-B1,B2 2.5-5'	**1602A52-001A**	**Soil**	**02/24/2016**	**GC16**	**117384**

Analytes	Result	RL	DF	Date Analyzed
1,1-Dichloropropene	ND	0.0050	1	03/01/2016 16:13
cis-1,3-Dichloropropene	ND	0.0050	1	03/01/2016 16:13
trans-1,3-Dichloropropene	ND	0.0050	1	03/01/2016 16:13
Diisopropyl ether (DIPE)	ND	0.0050	1	03/01/2016 16:13
Ethylbenzene	ND	0.0050	1	03/01/2016 16:13
Ethyl tert-butyl ether (ETBE)	ND	0.0050	1	03/01/2016 16:13
Freon 113	ND	0.0050	1	03/01/2016 16:13
Hexachlorobutadiene	ND	0.0050	1	03/01/2016 16:13
Hexachloroethane	ND	0.0050	1	03/01/2016 16:13
2-Hexanone	ND	0.0050	1	03/01/2016 16:13
Isopropylbenzene	ND	0.0050	1	03/01/2016 16:13
4-Isopropyl toluene	ND	0.0050	1	03/01/2016 16:13
Methyl-t-butyl ether (MTBE)	ND	0.0050	1	03/01/2016 16:13
Methylene chloride	ND	0.0050	1	03/01/2016 16:13
4-Methyl-2-pentanone (MIBK)	ND	0.0050	1	03/01/2016 16:13
Naphthalene	ND	0.0050	1	03/01/2016 16:13
n-Propyl benzene	ND	0.0050	1	03/01/2016 16:13
Styrene	ND	0.0050	1	03/01/2016 16:13
1,1,1,2-Tetrachloroethane	ND	0.0050	1	03/01/2016 16:13
1,1,2,2-Tetrachloroethane	ND	0.0050	1	03/01/2016 16:13
Tetrachloroethene	ND	0.0050	1	03/01/2016 16:13
Toluene	ND	0.0050	1	03/01/2016 16:13
1,2,3-Trichlorobenzene	ND	0.0050	1	03/01/2016 16:13
1,2,4-Trichlorobenzene	ND	0.0050	1	03/01/2016 16:13
1,1,1-Trichloroethane	ND	0.0050	1	03/01/2016 16:13
1,1,2-Trichloroethane	ND	0.0050	1	03/01/2016 16:13
Trichloroethene	ND	0.0050	1	03/01/2016 16:13
Trichlorofluoromethane	ND	0.0050	1	03/01/2016 16:13
1,2,3-Trichloropropane	ND	0.0050	1	03/01/2016 16:13
1,2,4-Trimethylbenzene	ND	0.0050	1	03/01/2016 16:13
1,3,5-Trimethylbenzene	ND	0.0050	1	03/01/2016 16:13
Vinyl Chloride	ND	0.0050	1	03/01/2016 16:13
Xylenes, Total	ND	0.0050	1	03/01/2016 16:13

(Cont.)

McCampbell Analytical, Inc.
"When Quality Counts"

1534 Willow Pass Road, Pittsburg, CA 94565-1701
Toll Free Telephone: (877) 252-9262 / Fax: (925) 252-9269
http://www.mccampbell.com / E-mail: main@mccampbell.com

Analytical Report

Client:	AEW Engineering, Inc.	**WorkOrder:**	1602A52
Date Received:	2/25/16 16:16	**Extraction Method:**	SW5030B
Date Prepared:	2/25/16-3/1/16	**Analytical Method:**	SW8260B
Project:	2015-29; Sausalito Gate 5 Characterization	**Unit:**	mg/kg

Volatile Organics by P&T and GC/MS (Basic Target List)

Client ID	Lab ID	Matrix	Date Collected	Instrument	Batch ID
COMP AEW-B1,B2 2.5-5'	**1602A52-001A**	**Soil**	**02/24/2016**	**GC16**	**117384**

Analytes	Result	RL	DF	Date Analyzed
Surrogates	REC (%)	Limits		
Dibromofluoromethane	101	70-130		03/01/2016 16:13
Toluene-d8	116	70-130		03/01/2016 16:13
4-BFB	104	70-130		03/01/2016 16:13
Benzene-d6	86	60-140		03/01/2016 16:13
Ethylbenzene-d10	99	60-140		03/01/2016 16:13
1,2-DCB-d4	65	60-140		03/01/2016 16:13

Analyst(s): KF

(Cont.)

McCampbell Analytical, Inc.
"When Quality Counts"

1534 Willow Pass Road, Pittsburg, CA 94565-1701
Toll Free Telephone: (877) 252-9262 / Fax: (925) 252-9269
http://www.mccampbell.com / E-mail: main@mccampbell.com

Analytical Report

Client:	AEW Engineering, Inc.	**WorkOrder:**	1602A52
Date Received:	2/25/16 16:16	**Extraction Method:**	SW5030B
Date Prepared:	2/25/16-3/1/16	**Analytical Method:**	SW8260B
Project:	2015-29; Sausalito Gate 5 Characterization	**Unit:**	mg/kg

Volatile Organics by P&T and GC/MS (Basic Target List)

Client ID	Lab ID	Matrix	Date Collected	Instrument	Batch ID
COMP AEW-B1,B2 10-15'	**1602A52-002A**	**Soil**	**02/24/2016**	**GC16**	**117251**

Analytes	Result	RL	DF	Date Analyzed
Acetone	ND	0.10	1	02/29/2016 23:21
tert-Amyl methyl ether (TAME)	ND	0.0050	1	02/29/2016 23:21
Benzene	ND	0.0050	1	02/29/2016 23:21
Bromobenzene	ND	0.0050	1	02/29/2016 23:21
Bromochloromethane	ND	0.0050	1	02/29/2016 23:21
Bromodichloromethane	ND	0.0050	1	02/29/2016 23:21
Bromoform	ND	0.0050	1	02/29/2016 23:21
Bromomethane	ND	0.0050	1	02/29/2016 23:21
2-Butanone (MEK)	ND	0.020	1	02/29/2016 23:21
t-Butyl alcohol (TBA)	ND	0.050	1	02/29/2016 23:21
n-Butyl benzene	ND	0.0050	1	02/29/2016 23:21
sec-Butyl benzene	ND	0.0050	1	02/29/2016 23:21
tert-Butyl benzene	ND	0.0050	1	02/29/2016 23:21
Carbon Disulfide	ND	0.0050	1	02/29/2016 23:21
Carbon Tetrachloride	ND	0.0050	1	02/29/2016 23:21
Chlorobenzene	ND	0.0050	1	02/29/2016 23:21
Chloroethane	ND	0.0050	1	02/29/2016 23:21
Chloroform	ND	0.0050	1	02/29/2016 23:21
Chloromethane	ND	0.0050	1	02/29/2016 23:21
2-Chlorotoluene	ND	0.0050	1	02/29/2016 23:21
4-Chlorotoluene	ND	0.0050	1	02/29/2016 23:21
Dibromochloromethane	ND	0.0050	1	02/29/2016 23:21
1,2-Dibromo-3-chloropropane	ND	0.0040	1	02/29/2016 23:21
1,2-Dibromoethane (EDB)	ND	0.0040	1	02/29/2016 23:21
Dibromomethane	ND	0.0050	1	02/29/2016 23:21
1,2-Dichlorobenzene	ND	0.0050	1	02/29/2016 23:21
1,3-Dichlorobenzene	ND	0.0050	1	02/29/2016 23:21
1,4-Dichlorobenzene	ND	0.0050	1	02/29/2016 23:21
Dichlorodifluoromethane	ND	0.0050	1	02/29/2016 23:21
1,1-Dichloroethane	ND	0.0050	1	02/29/2016 23:21
1,2-Dichloroethane (1,2-DCA)	ND	0.0040	1	02/29/2016 23:21
1,1-Dichloroethene	ND	0.0050	1	02/29/2016 23:21
cis-1,2-Dichloroethene	ND	0.0050	1	02/29/2016 23:21
trans-1,2-Dichloroethene	ND	0.0050	1	02/29/2016 23:21
1,2-Dichloropropane	ND	0.0050	1	02/29/2016 23:21
1,3-Dichloropropane	ND	0.0050	1	02/29/2016 23:21
2,2-Dichloropropane	ND	0.0050	1	02/29/2016 23:21

(Cont.)

McCampbell Analytical, Inc.
"When Quality Counts"

1534 Willow Pass Road, Pittsburg, CA 94565-1701
Toll Free Telephone: (877) 252-9262 / Fax: (925) 252-9269
http://www.mccampbell.com / E-mail: main@mccampbell.com

Analytical Report

Client:	AEW Engineering, Inc.	**WorkOrder:**	1602A52
Date Received:	2/25/16 16:16	**Extraction Method:**	SW5030B
Date Prepared:	2/25/16-3/1/16	**Analytical Method:**	SW8260B
Project:	2015-29; Sausalito Gate 5 Characterization	**Unit:**	mg/kg

Volatile Organics by P&T and GC/MS (Basic Target List)

Client ID	Lab ID	Matrix	Date Collected	Instrument	Batch ID
COMP AEW-B1,B2 10-15'	**1602A52-002A**	**Soil**	**02/24/2016**	**GC16**	**117251**

Analytes	Result	RL	DF	Date Analyzed
1,1-Dichloropropene	ND	0.0050	1	02/29/2016 23:21
cis-1,3-Dichloropropene	ND	0.0050	1	02/29/2016 23:21
trans-1,3-Dichloropropene	ND	0.0050	1	02/29/2016 23:21
Diisopropyl ether (DIPE)	ND	0.0050	1	02/29/2016 23:21
Ethylbenzene	ND	0.0050	1	02/29/2016 23:21
Ethyl tert-butyl ether (ETBE)	ND	0.0050	1	02/29/2016 23:21
Freon 113	ND	0.0050	1	02/29/2016 23:21
Hexachlorobutadiene	ND	0.0050	1	02/29/2016 23:21
Hexachloroethane	ND	0.0050	1	02/29/2016 23:21
2-Hexanone	ND	0.0050	1	02/29/2016 23:21
Isopropylbenzene	ND	0.0050	1	02/29/2016 23:21
4-Isopropyl toluene	ND	0.0050	1	02/29/2016 23:21
Methyl-t-butyl ether (MTBE)	ND	0.0050	1	02/29/2016 23:21
Methylene chloride	ND	0.0050	1	02/29/2016 23:21
4-Methyl-2-pentanone (MIBK)	ND	0.0050	1	02/29/2016 23:21
Naphthalene	ND	0.0050	1	02/29/2016 23:21
n-Propyl benzene	ND	0.0050	1	02/29/2016 23:21
Styrene	ND	0.0050	1	02/29/2016 23:21
1,1,1,2-Tetrachloroethane	ND	0.0050	1	02/29/2016 23:21
1,1,2,2-Tetrachloroethane	ND	0.0050	1	02/29/2016 23:21
Tetrachloroethene	ND	0.0050	1	02/29/2016 23:21
Toluene	ND	0.0050	1	02/29/2016 23:21
1,2,3-Trichlorobenzene	ND	0.0050	1	02/29/2016 23:21
1,2,4-Trichlorobenzene	ND	0.0050	1	02/29/2016 23:21
1,1,1-Trichloroethane	ND	0.0050	1	02/29/2016 23:21
1,1,2-Trichloroethane	ND	0.0050	1	02/29/2016 23:21
Trichloroethene	ND	0.0050	1	02/29/2016 23:21
Trichlorofluoromethane	ND	0.0050	1	02/29/2016 23:21
1,2,3-Trichloropropane	ND	0.0050	1	02/29/2016 23:21
1,2,4-Trimethylbenzene	ND	0.0050	1	02/29/2016 23:21
1,3,5-Trimethylbenzene	ND	0.0050	1	02/29/2016 23:21
Vinyl Chloride	ND	0.0050	1	02/29/2016 23:21
Xylenes, Total	ND	0.0050	1	02/29/2016 23:21

(Cont.)

McCampbell Analytical, Inc.
"When Quality Counts"

1534 Willow Pass Road, Pittsburg, CA 94565-1701
Toll Free Telephone: (877) 252-9262 / Fax: (925) 252-9269
http://www.mccampbell.com / E-mail: main@mccampbell.com

Analytical Report

Client:	AEW Engineering, Inc.	**WorkOrder:**	1602A52
Date Received:	2/25/16 16:16	**Extraction Method:**	SW5030B
Date Prepared:	2/25/16-3/1/16	**Analytical Method:**	SW8260B
Project:	2015-29; Sausalito Gate 5 Characterization	**Unit:**	mg/kg

Volatile Organics by P&T and GC/MS (Basic Target List)

Client ID	Lab ID	Matrix	Date Collected	Instrument	Batch ID
COMP AEW-B1,B2 10-15'	**1602A52-002A**	**Soil**	**02/24/2016**	**GC16**	**117251**

Analytes	Result	RL	DF	Date Analyzed
Surrogates	REC (%)	Limits		
Dibromofluoromethane	104	70-130		02/29/2016 23:21
Toluene-d8	111	70-130		02/29/2016 23:21
4-BFB	113	70-130		02/29/2016 23:21
Benzene-d6	80	60-140		02/29/2016 23:21
Ethylbenzene-d10	81	60-140		02/29/2016 23:21
1,2-DCB-d4	60	60-140		02/29/2016 23:21

Analyst(s): KF

(Cont.)

McCampbell Analytical, Inc.
"When Quality Counts"

1534 Willow Pass Road, Pittsburg, CA 94565-1701
Toll Free Telephone: (877) 252-9262 / Fax: (925) 252-9269
http://www.mccampbell.com / E-mail: main@mccampbell.com

Analytical Report

Client:	AEW Engineering, Inc.	**WorkOrder:**	1602A52
Date Received:	2/25/16 16:16	**Extraction Method:**	SW5030B
Date Prepared:	2/25/16-3/1/16	**Analytical Method:**	SW8260B
Project:	2015-29; Sausalito Gate 5 Characterization	**Unit:**	mg/kg

Volatile Organics by P&T and GC/MS (Basic Target List)

Client ID	Lab ID	Matrix	Date Collected	Instrument	Batch ID
COMP AEW-B3,B4 2.5-5'	**1602A52-003A**	**Soil**	**02/23/2016**	**GC16**	**117251**

Analytes	Result	RL	DF	Date Analyzed
Acetone	ND	0.10	1	02/29/2016 22:42
tert-Amyl methyl ether (TAME)	ND	0.0050	1	02/29/2016 22:42
Benzene	ND	0.0050	1	02/29/2016 22:42
Bromobenzene	ND	0.0050	1	02/29/2016 22:42
Bromochloromethane	ND	0.0050	1	02/29/2016 22:42
Bromodichloromethane	ND	0.0050	1	02/29/2016 22:42
Bromoform	ND	0.0050	1	02/29/2016 22:42
Bromomethane	ND	0.0050	1	02/29/2016 22:42
2-Butanone (MEK)	ND	0.020	1	02/29/2016 22:42
t-Butyl alcohol (TBA)	ND	0.050	1	02/29/2016 22:42
n-Butyl benzene	ND	0.0050	1	02/29/2016 22:42
sec-Butyl benzene	ND	0.0050	1	02/29/2016 22:42
tert-Butyl benzene	ND	0.0050	1	02/29/2016 22:42
Carbon Disulfide	ND	0.0050	1	02/29/2016 22:42
Carbon Tetrachloride	ND	0.0050	1	02/29/2016 22:42
Chlorobenzene	ND	0.0050	1	02/29/2016 22:42
Chloroethane	ND	0.0050	1	02/29/2016 22:42
Chloroform	ND	0.0050	1	02/29/2016 22:42
Chloromethane	ND	0.0050	1	02/29/2016 22:42
2-Chlorotoluene	ND	0.0050	1	02/29/2016 22:42
4-Chlorotoluene	ND	0.0050	1	02/29/2016 22:42
Dibromochloromethane	ND	0.0050	1	02/29/2016 22:42
1,2-Dibromo-3-chloropropane	ND	0.0040	1	02/29/2016 22:42
1,2-Dibromoethane (EDB)	ND	0.0040	1	02/29/2016 22:42
Dibromomethane	ND	0.0050	1	02/29/2016 22:42
1,2-Dichlorobenzene	ND	0.0050	1	02/29/2016 22:42
1,3-Dichlorobenzene	ND	0.0050	1	02/29/2016 22:42
1,4-Dichlorobenzene	ND	0.0050	1	02/29/2016 22:42
Dichlorodifluoromethane	ND	0.0050	1	02/29/2016 22:42
1,1-Dichloroethane	ND	0.0050	1	02/29/2016 22:42
1,2-Dichloroethane (1,2-DCA)	ND	0.0040	1	02/29/2016 22:42
1,1-Dichloroethene	ND	0.0050	1	02/29/2016 22:42
cis-1,2-Dichloroethene	ND	0.0050	1	02/29/2016 22:42
trans-1,2-Dichloroethene	ND	0.0050	1	02/29/2016 22:42
1,2-Dichloropropane	ND	0.0050	1	02/29/2016 22:42
1,3-Dichloropropane	ND	0.0050	1	02/29/2016 22:42
2,2-Dichloropropane	ND	0.0050	1	02/29/2016 22:42

(Cont.)

McCampbell Analytical, Inc.
"When Quality Counts"

1534 Willow Pass Road, Pittsburg, CA 94565-1701
Toll Free Telephone: (877) 252-9262 / Fax: (925) 252-9269
http://www.mccampbell.com / E-mail: main@mccampbell.com

Analytical Report

Client:	AEW Engineering, Inc.	**WorkOrder:**	1602A52
Date Received:	2/25/16 16:16	**Extraction Method:**	SW5030B
Date Prepared:	2/25/16-3/1/16	**Analytical Method:**	SW8260B
Project:	2015-29; Sausalito Gate 5 Characterization	**Unit:**	mg/kg

Volatile Organics by P&T and GC/MS (Basic Target List)

Client ID	Lab ID	Matrix	Date Collected	Instrument	Batch ID
COMP AEW-B3,B4 2.5-5'	**1602A52-003A**	**Soil**	**02/23/2016**	**GC16**	**117251**

Analytes	Result	RL	DF	Date Analyzed
1,1-Dichloropropene	ND	0.0050	1	02/29/2016 22:42
cis-1,3-Dichloropropene	ND	0.0050	1	02/29/2016 22:42
trans-1,3-Dichloropropene	ND	0.0050	1	02/29/2016 22:42
Diisopropyl ether (DIPE)	ND	0.0050	1	02/29/2016 22:42
Ethylbenzene	ND	0.0050	1	02/29/2016 22:42
Ethyl tert-butyl ether (ETBE)	ND	0.0050	1	02/29/2016 22:42
Freon 113	ND	0.0050	1	02/29/2016 22:42
Hexachlorobutadiene	ND	0.0050	1	02/29/2016 22:42
Hexachloroethane	ND	0.0050	1	02/29/2016 22:42
2-Hexanone	ND	0.0050	1	02/29/2016 22:42
Isopropylbenzene	ND	0.0050	1	02/29/2016 22:42
4-Isopropyl toluene	ND	0.0050	1	02/29/2016 22:42
Methyl-t-butyl ether (MTBE)	ND	0.0050	1	02/29/2016 22:42
Methylene chloride	ND	0.0050	1	02/29/2016 22:42
4-Methyl-2-pentanone (MIBK)	ND	0.0050	1	02/29/2016 22:42
Naphthalene	ND	0.0050	1	02/29/2016 22:42
n-Propyl benzene	ND	0.0050	1	02/29/2016 22:42
Styrene	ND	0.0050	1	02/29/2016 22:42
1,1,1,2-Tetrachloroethane	ND	0.0050	1	02/29/2016 22:42
1,1,2,2-Tetrachloroethane	ND	0.0050	1	02/29/2016 22:42
Tetrachloroethene	ND	0.0050	1	02/29/2016 22:42
Toluene	ND	0.0050	1	02/29/2016 22:42
1,2,3-Trichlorobenzene	ND	0.0050	1	02/29/2016 22:42
1,2,4-Trichlorobenzene	ND	0.0050	1	02/29/2016 22:42
1,1,1-Trichloroethane	ND	0.0050	1	02/29/2016 22:42
1,1,2-Trichloroethane	ND	0.0050	1	02/29/2016 22:42
Trichloroethene	ND	0.0050	1	02/29/2016 22:42
Trichlorofluoromethane	ND	0.0050	1	02/29/2016 22:42
1,2,3-Trichloropropane	ND	0.0050	1	02/29/2016 22:42
1,2,4-Trimethylbenzene	ND	0.0050	1	02/29/2016 22:42
1,3,5-Trimethylbenzene	ND	0.0050	1	02/29/2016 22:42
Vinyl Chloride	ND	0.0050	1	02/29/2016 22:42
Xylenes, Total	ND	0.0050	1	02/29/2016 22:42

(Cont.)

McCampbell Analytical, Inc.
"When Quality Counts"

1534 Willow Pass Road, Pittsburg, CA 94565-1701
Toll Free Telephone: (877) 252-9262 / Fax: (925) 252-9269
http://www.mccampbell.com / E-mail: main@mccampbell.com

Analytical Report

Client:	AEW Engineering, Inc.	**WorkOrder:**	1602A52
Date Received:	2/25/16 16:16	**Extraction Method:**	SW5030B
Date Prepared:	2/25/16-3/1/16	**Analytical Method:**	SW8260B
Project:	2015-29; Sausalito Gate 5 Characterization	**Unit:**	mg/kg

Volatile Organics by P&T and GC/MS (Basic Target List)

Client ID	Lab ID	Matrix	Date Collected	Instrument	Batch ID
COMP AEW-B3,B4 2.5-5'	**1602A52-003A**	**Soil**	**02/23/2016**	**GC16**	**117251**

Analytes	Result	RL	DF	Date Analyzed
Surrogates	REC (%)	Limits		
Dibromofluoromethane	103	70-130		02/29/2016 22:42
Toluene-d8	113	70-130		02/29/2016 22:42
4-BFB	113	70-130		02/29/2016 22:42
Benzene-d6	89	60-140		02/29/2016 22:42
Ethylbenzene-d10	95	60-140		02/29/2016 22:42
1,2-DCB-d4	62	60-140		02/29/2016 22:42

Analyst(s): KF

(Cont.)

McCampbell Analytical, Inc.
"When Quality Counts"

1534 Willow Pass Road, Pittsburg, CA 94565-1701
Toll Free Telephone: (877) 252-9262 / Fax: (925) 252-9269
http://www.mccampbell.com / E-mail: main@mccampbell.com

Analytical Report

Client:	AEW Engineering, Inc.	**WorkOrder:**	1602A52
Date Received:	2/25/16 16:16	**Extraction Method:**	SW5030B
Date Prepared:	2/25/16-3/1/16	**Analytical Method:**	SW8260B
Project:	2015-29; Sausalito Gate 5 Characterization	**Unit:**	mg/kg

Volatile Organics by P&T and GC/MS (Basic Target List)

Client ID	Lab ID	Matrix	Date Collected	Instrument	Batch ID
COMP AEW-B3,4 10-15'	**1602A52-004A**	**Soil**	**02/23/2016**	**GC16**	**117251**

Analytes	Result	RL	DF	Date Analyzed
Acetone	ND	0.10	1	03/01/2016 16:53
tert-Amyl methyl ether (TAME)	ND	0.0050	1	03/01/2016 16:53
Benzene	ND	0.0050	1	03/01/2016 16:53
Bromobenzene	ND	0.0050	1	03/01/2016 16:53
Bromochloromethane	ND	0.0050	1	03/01/2016 16:53
Bromodichloromethane	ND	0.0050	1	03/01/2016 16:53
Bromoform	ND	0.0050	1	03/01/2016 16:53
Bromomethane	ND	0.0050	1	03/01/2016 16:53
2-Butanone (MEK)	ND	0.020	1	03/01/2016 16:53
t-Butyl alcohol (TBA)	ND	0.050	1	03/01/2016 16:53
n-Butyl benzene	ND	0.0050	1	03/01/2016 16:53
sec-Butyl benzene	ND	0.0050	1	03/01/2016 16:53
tert-Butyl benzene	ND	0.0050	1	03/01/2016 16:53
Carbon Disulfide	ND	0.0050	1	03/01/2016 16:53
Carbon Tetrachloride	ND	0.0050	1	03/01/2016 16:53
Chlorobenzene	ND	0.0050	1	03/01/2016 16:53
Chloroethane	ND	0.0050	1	03/01/2016 16:53
Chloroform	ND	0.0050	1	03/01/2016 16:53
Chloromethane	ND	0.0050	1	03/01/2016 16:53
2-Chlorotoluene	ND	0.0050	1	03/01/2016 16:53
4-Chlorotoluene	ND	0.0050	1	03/01/2016 16:53
Dibromochloromethane	ND	0.0050	1	03/01/2016 16:53
1,2-Dibromo-3-chloropropane	ND	0.0040	1	03/01/2016 16:53
1,2-Dibromoethane (EDB)	ND	0.0040	1	03/01/2016 16:53
Dibromomethane	ND	0.0050	1	03/01/2016 16:53
1,2-Dichlorobenzene	ND	0.0050	1	03/01/2016 16:53
1,3-Dichlorobenzene	ND	0.0050	1	03/01/2016 16:53
1,4-Dichlorobenzene	ND	0.0050	1	03/01/2016 16:53
Dichlorodifluoromethane	ND	0.0050	1	03/01/2016 16:53
1,1-Dichloroethane	ND	0.0050	1	03/01/2016 16:53
1,2-Dichloroethane (1,2-DCA)	ND	0.0040	1	03/01/2016 16:53
1,1-Dichloroethene	ND	0.0050	1	03/01/2016 16:53
cis-1,2-Dichloroethene	ND	0.0050	1	03/01/2016 16:53
trans-1,2-Dichloroethene	ND	0.0050	1	03/01/2016 16:53
1,2-Dichloropropane	ND	0.0050	1	03/01/2016 16:53
1,3-Dichloropropane	ND	0.0050	1	03/01/2016 16:53
2,2-Dichloropropane	ND	0.0050	1	03/01/2016 16:53

(Cont.)

McCampbell Analytical, Inc.
"When Quality Counts"

1534 Willow Pass Road, Pittsburg, CA 94565-1701
Toll Free Telephone: (877) 252-9262 / Fax: (925) 252-9269
http://www.mccampbell.com / E-mail: main@mccampbell.com

Analytical Report

Client:	AEW Engineering, Inc.	**WorkOrder:**	1602A52
Date Received:	2/25/16 16:16	**Extraction Method:**	SW5030B
Date Prepared:	2/25/16-3/1/16	**Analytical Method:**	SW8260B
Project:	2015-29; Sausalito Gate 5 Characterization	**Unit:**	mg/kg

Volatile Organics by P&T and GC/MS (Basic Target List)

Client ID	Lab ID	Matrix	Date Collected	Instrument	Batch ID
COMP AEW-B3,4 10-15'	1602A52-004A	Soil	02/23/2016	GC16	117251

Analytes	Result	RL	DF	Date Analyzed
1,1-Dichloropropene	ND	0.0050	1	03/01/2016 16:53
cis-1,3-Dichloropropene	ND	0.0050	1	03/01/2016 16:53
trans-1,3-Dichloropropene	ND	0.0050	1	03/01/2016 16:53
Diisopropyl ether (DIPE)	ND	0.0050	1	03/01/2016 16:53
Ethylbenzene	ND	0.0050	1	03/01/2016 16:53
Ethyl tert-butyl ether (ETBE)	ND	0.0050	1	03/01/2016 16:53
Freon 113	ND	0.0050	1	03/01/2016 16:53
Hexachlorobutadiene	ND	0.0050	1	03/01/2016 16:53
Hexachloroethane	ND	0.0050	1	03/01/2016 16:53
2-Hexanone	ND	0.0050	1	03/01/2016 16:53
Isopropylbenzene	ND	0.0050	1	03/01/2016 16:53
4-Isopropyl toluene	ND	0.0050	1	03/01/2016 16:53
Methyl-t-butyl ether (MTBE)	ND	0.0050	1	03/01/2016 16:53
Methylene chloride	ND	0.0050	1	03/01/2016 16:53
4-Methyl-2-pentanone (MIBK)	ND	0.0050	1	03/01/2016 16:53
Naphthalene	ND	0.0050	1	03/01/2016 16:53
n-Propyl benzene	ND	0.0050	1	03/01/2016 16:53
Styrene	ND	0.0050	1	03/01/2016 16:53
1,1,1,2-Tetrachloroethane	ND	0.0050	1	03/01/2016 16:53
1,1,2,2-Tetrachloroethane	ND	0.0050	1	03/01/2016 16:53
Tetrachloroethene	ND	0.0050	1	03/01/2016 16:53
Toluene	ND	0.0050	1	03/01/2016 16:53
1,2,3-Trichlorobenzene	ND	0.0050	1	03/01/2016 16:53
1,2,4-Trichlorobenzene	ND	0.0050	1	03/01/2016 16:53
1,1,1-Trichloroethane	ND	0.0050	1	03/01/2016 16:53
1,1,2-Trichloroethane	ND	0.0050	1	03/01/2016 16:53
Trichloroethene	ND	0.0050	1	03/01/2016 16:53
Trichlorofluoromethane	ND	0.0050	1	03/01/2016 16:53
1,2,3-Trichloropropane	ND	0.0050	1	03/01/2016 16:53
1,2,4-Trimethylbenzene	ND	0.0050	1	03/01/2016 16:53
1,3,5-Trimethylbenzene	ND	0.0050	1	03/01/2016 16:53
Vinyl Chloride	ND	0.0050	1	03/01/2016 16:53
Xylenes, Total	ND	0.0050	1	03/01/2016 16:53

(Cont.)

McCampbell Analytical, Inc.
"When Quality Counts"

1534 Willow Pass Road, Pittsburg, CA 94565-1701
Toll Free Telephone: (877) 252-9262 / Fax: (925) 252-9269
http://www.mccampbell.com / E-mail: main@mccampbell.com

Analytical Report

Client:	AEW Engineering, Inc.	**WorkOrder:**	1602A52
Date Received:	2/25/16 16:16	**Extraction Method:**	SW5030B
Date Prepared:	2/25/16-3/1/16	**Analytical Method:**	SW8260B
Project:	2015-29; Sausalito Gate 5 Characterization	**Unit:**	mg/kg

Volatile Organics by P&T and GC/MS (Basic Target List)

Client ID	Lab ID	Matrix	Date Collected	Instrument	Batch ID
COMP AEW-B3,4 10-15'	**1602A52-004A**	**Soil**	**02/23/2016**	**GC16**	**117251**

Analytes	Result	RL	DF	Date Analyzed
Surrogates	REC (%)	Limits		
Dibromofluoromethane	101	70-130		03/01/2016 16:53
Toluene-d8	113	70-130		03/01/2016 16:53
4-BFB	104	70-130		03/01/2016 16:53
Benzene-d6	80	60-140		03/01/2016 16:53
Ethylbenzene-d10	91	60-140		03/01/2016 16:53
1,2-DCB-d4	62	60-140		03/01/2016 16:53

Analyst(s): KF

(Cont.)

McCampbell Analytical, Inc.
"When Quality Counts"

1534 Willow Pass Road, Pittsburg, CA 94565-1701
Toll Free Telephone: (877) 252-9262 / Fax: (925) 252-9269
http://www.mccampbell.com / E-mail: main@mccampbell.com

Analytical Report

Client:	AEW Engineering, Inc.	**WorkOrder:**	1602A52
Date Received:	2/25/16 16:16	**Extraction Method:**	SW5030B
Date Prepared:	2/25/16-3/1/16	**Analytical Method:**	SW8260B
Project:	2015-29; Sausalito Gate 5 Characterization	**Unit:**	mg/kg

Volatile Organics by P&T and GC/MS (Basic Target List)

Client ID	Lab ID	Matrix	Date Collected	Instrument	Batch ID
COMP AEW-B5,B11 2.5-5'	**1602A52-005A**	**Soil**	**02/25/2016**	**GC16**	**117251**

Analytes	Result	RL	DF	Date Analyzed
Acetone	ND	0.10	1	02/29/2016 20:43
tert-Amyl methyl ether (TAME)	ND	0.0050	1	02/29/2016 20:43
Benzene	ND	0.0050	1	02/29/2016 20:43
Bromobenzene	ND	0.0050	1	02/29/2016 20:43
Bromochloromethane	ND	0.0050	1	02/29/2016 20:43
Bromodichloromethane	ND	0.0050	1	02/29/2016 20:43
Bromoform	ND	0.0050	1	02/29/2016 20:43
Bromomethane	ND	0.0050	1	02/29/2016 20:43
2-Butanone (MEK)	ND	0.020	1	02/29/2016 20:43
t-Butyl alcohol (TBA)	ND	0.050	1	02/29/2016 20:43
n-Butyl benzene	ND	0.0050	1	02/29/2016 20:43
sec-Butyl benzene	ND	0.0050	1	02/29/2016 20:43
tert-Butyl benzene	ND	0.0050	1	02/29/2016 20:43
Carbon Disulfide	ND	0.0050	1	02/29/2016 20:43
Carbon Tetrachloride	ND	0.0050	1	02/29/2016 20:43
Chlorobenzene	ND	0.0050	1	02/29/2016 20:43
Chloroethane	ND	0.0050	1	02/29/2016 20:43
Chloroform	ND	0.0050	1	02/29/2016 20:43
Chloromethane	ND	0.0050	1	02/29/2016 20:43
2-Chlorotoluene	ND	0.0050	1	02/29/2016 20:43
4-Chlorotoluene	ND	0.0050	1	02/29/2016 20:43
Dibromochloromethane	ND	0.0050	1	02/29/2016 20:43
1,2-Dibromo-3-chloropropane	ND	0.0040	1	02/29/2016 20:43
1,2-Dibromoethane (EDB)	ND	0.0040	1	02/29/2016 20:43
Dibromomethane	ND	0.0050	1	02/29/2016 20:43
1,2-Dichlorobenzene	ND	0.0050	1	02/29/2016 20:43
1,3-Dichlorobenzene	ND	0.0050	1	02/29/2016 20:43
1,4-Dichlorobenzene	ND	0.0050	1	02/29/2016 20:43
Dichlorodifluoromethane	ND	0.0050	1	02/29/2016 20:43
1,1-Dichloroethane	ND	0.0050	1	02/29/2016 20:43
1,2-Dichloroethane (1,2-DCA)	ND	0.0040	1	02/29/2016 20:43
1,1-Dichloroethene	ND	0.0050	1	02/29/2016 20:43
cis-1,2-Dichloroethene	ND	0.0050	1	02/29/2016 20:43
trans-1,2-Dichloroethene	ND	0.0050	1	02/29/2016 20:43
1,2-Dichloropropane	ND	0.0050	1	02/29/2016 20:43
1,3-Dichloropropane	ND	0.0050	1	02/29/2016 20:43
2,2-Dichloropropane	ND	0.0050	1	02/29/2016 20:43

(Cont.)

McCampbell Analytical, Inc.
"When Quality Counts"

1534 Willow Pass Road, Pittsburg, CA 94565-1701
Toll Free Telephone: (877) 252-9262 / Fax: (925) 252-9269
http://www.mccampbell.com / E-mail: main@mccampbell.com

Analytical Report

Client:	AEW Engineering, Inc.	**WorkOrder:**	1602A52
Date Received:	2/25/16 16:16	**Extraction Method:**	SW5030B
Date Prepared:	2/25/16-3/1/16	**Analytical Method:**	SW8260B
Project:	2015-29; Sausalito Gate 5 Characterization	**Unit:**	mg/kg

Volatile Organics by P&T and GC/MS (Basic Target List)

Client ID	Lab ID	Matrix	Date Collected	Instrument	Batch ID
COMP AEW-B5,B11 2.5-5'	**1602A52-005A**	**Soil**	**02/25/2016**	**GC16**	**117251**

Analytes	Result	RL	DF	Date Analyzed
1,1-Dichloropropene	ND	0.0050	1	02/29/2016 20:43
cis-1,3-Dichloropropene	ND	0.0050	1	02/29/2016 20:43
trans-1,3-Dichloropropene	ND	0.0050	1	02/29/2016 20:43
Diisopropyl ether (DIPE)	ND	0.0050	1	02/29/2016 20:43
Ethylbenzene	ND	0.0050	1	02/29/2016 20:43
Ethyl tert-butyl ether (ETBE)	ND	0.0050	1	02/29/2016 20:43
Freon 113	ND	0.0050	1	02/29/2016 20:43
Hexachlorobutadiene	ND	0.0050	1	02/29/2016 20:43
Hexachloroethane	ND	0.0050	1	02/29/2016 20:43
2-Hexanone	ND	0.0050	1	02/29/2016 20:43
Isopropylbenzene	ND	0.0050	1	02/29/2016 20:43
4-Isopropyl toluene	ND	0.0050	1	02/29/2016 20:43
Methyl-t-butyl ether (MTBE)	ND	0.0050	1	02/29/2016 20:43
Methylene chloride	ND	0.0050	1	02/29/2016 20:43
4-Methyl-2-pentanone (MIBK)	ND	0.0050	1	02/29/2016 20:43
Naphthalene	**0.025**	0.0050	1	02/29/2016 20:43
n-Propyl benzene	ND	0.0050	1	02/29/2016 20:43
Styrene	ND	0.0050	1	02/29/2016 20:43
1,1,1,2-Tetrachloroethane	ND	0.0050	1	02/29/2016 20:43
1,1,2,2-Tetrachloroethane	ND	0.0050	1	02/29/2016 20:43
Tetrachloroethene	ND	0.0050	1	02/29/2016 20:43
Toluene	ND	0.0050	1	02/29/2016 20:43
1,2,3-Trichlorobenzene	ND	0.0050	1	02/29/2016 20:43
1,2,4-Trichlorobenzene	ND	0.0050	1	02/29/2016 20:43
1,1,1-Trichloroethane	ND	0.0050	1	02/29/2016 20:43
1,1,2-Trichloroethane	ND	0.0050	1	02/29/2016 20:43
Trichloroethene	ND	0.0050	1	02/29/2016 20:43
Trichlorofluoromethane	ND	0.0050	1	02/29/2016 20:43
1,2,3-Trichloropropane	ND	0.0050	1	02/29/2016 20:43
1,2,4-Trimethylbenzene	**0.0079**	0.0050	1	02/29/2016 20:43
1,3,5-Trimethylbenzene	ND	0.0050	1	02/29/2016 20:43
Vinyl Chloride	ND	0.0050	1	02/29/2016 20:43
Xylenes, Total	ND	0.0050	1	02/29/2016 20:43

(Cont.)

McCampbell Analytical, Inc.
"When Quality Counts"

1534 Willow Pass Road, Pittsburg, CA 94565-1701
Toll Free Telephone: (877) 252-9262 / Fax: (925) 252-9269
http://www.mccampbell.com / E-mail: main@mccampbell.com

Analytical Report

Client:	AEW Engineering, Inc.	**WorkOrder:**	1602A52
Date Received:	2/25/16 16:16	**Extraction Method:**	SW5030B
Date Prepared:	2/25/16-3/1/16	**Analytical Method:**	SW8260B
Project:	2015-29; Sausalito Gate 5 Characterization	**Unit:**	mg/kg

Volatile Organics by P&T and GC/MS (Basic Target List)

Client ID	Lab ID	Matrix	Date Collected	Instrument	Batch ID
COMP AEW-B5,B11 2.5-5'	**1602A52-005A**	**Soil**	**02/25/2016**	**GC16**	**117251**

Analytes	Result	RL	DF	Date Analyzed
Surrogates	REC (%)	Limits		
Dibromofluoromethane	101	70-130		02/29/2016 20:43
Toluene-d8	108	70-130		02/29/2016 20:43
4-BFB	99	70-130		02/29/2016 20:43
Benzene-d6	89	60-140		02/29/2016 20:43
Ethylbenzene-d10	96	60-140		02/29/2016 20:43
1,2-DCB-d4	64	60-140		02/29/2016 20:43

Analyst(s): KF

(Cont.)

McCampbell Analytical, Inc.
"When Quality Counts"

1534 Willow Pass Road, Pittsburg, CA 94565-1701
Toll Free Telephone: (877) 252-9262 / Fax: (925) 252-9269
http://www.mccampbell.com / E-mail: main@mccampbell.com

Analytical Report

Client:	AEW Engineering, Inc.	**WorkOrder:**	1602A52
Date Received:	2/25/16 16:16	**Extraction Method:**	SW5030B
Date Prepared:	2/25/16-3/1/16	**Analytical Method:**	SW8260B
Project:	2015-29; Sausalito Gate 5 Characterization	**Unit:**	mg/kg

Volatile Organics by P&T and GC/MS (Basic Target List)

Client ID	Lab ID	Matrix	Date Collected	Instrument	Batch ID
COMP AEW-B5,B11 10-15'	**1602A52-006A**	**Soil**	**02/25/2016**	**GC16**	**117251**

Analytes	Result	RL	DF	Date Analyzed
Acetone	ND	0.10	1	02/29/2016 18:05
tert-Amyl methyl ether (TAME)	ND	0.0050	1	02/29/2016 18:05
Benzene	ND	0.0050	1	02/29/2016 18:05
Bromobenzene	ND	0.0050	1	02/29/2016 18:05
Bromochloromethane	ND	0.0050	1	02/29/2016 18:05
Bromodichloromethane	ND	0.0050	1	02/29/2016 18:05
Bromoform	ND	0.0050	1	02/29/2016 18:05
Bromomethane	ND	0.0050	1	02/29/2016 18:05
2-Butanone (MEK)	ND	0.020	1	02/29/2016 18:05
t-Butyl alcohol (TBA)	ND	0.050	1	02/29/2016 18:05
n-Butyl benzene	ND	0.0050	1	02/29/2016 18:05
sec-Butyl benzene	ND	0.0050	1	02/29/2016 18:05
tert-Butyl benzene	ND	0.0050	1	02/29/2016 18:05
Carbon Disulfide	ND	0.0050	1	02/29/2016 18:05
Carbon Tetrachloride	ND	0.0050	1	02/29/2016 18:05
Chlorobenzene	ND	0.0050	1	02/29/2016 18:05
Chloroethane	ND	0.0050	1	02/29/2016 18:05
Chloroform	ND	0.0050	1	02/29/2016 18:05
Chloromethane	ND	0.0050	1	02/29/2016 18:05
2-Chlorotoluene	ND	0.0050	1	02/29/2016 18:05
4-Chlorotoluene	ND	0.0050	1	02/29/2016 18:05
Dibromochloromethane	ND	0.0050	1	02/29/2016 18:05
1,2-Dibromo-3-chloropropane	ND	0.0040	1	02/29/2016 18:05
1,2-Dibromoethane (EDB)	ND	0.0040	1	02/29/2016 18:05
Dibromomethane	ND	0.0050	1	02/29/2016 18:05
1,2-Dichlorobenzene	ND	0.0050	1	02/29/2016 18:05
1,3-Dichlorobenzene	ND	0.0050	1	02/29/2016 18:05
1,4-Dichlorobenzene	ND	0.0050	1	02/29/2016 18:05
Dichlorodifluoromethane	ND	0.0050	1	02/29/2016 18:05
1,1-Dichloroethane	ND	0.0050	1	02/29/2016 18:05
1,2-Dichloroethane (1,2-DCA)	ND	0.0040	1	02/29/2016 18:05
1,1-Dichloroethene	ND	0.0050	1	02/29/2016 18:05
cis-1,2-Dichloroethene	ND	0.0050	1	02/29/2016 18:05
trans-1,2-Dichloroethene	ND	0.0050	1	02/29/2016 18:05
1,2-Dichloropropane	ND	0.0050	1	02/29/2016 18:05
1,3-Dichloropropane	ND	0.0050	1	02/29/2016 18:05
2,2-Dichloropropane	ND	0.0050	1	02/29/2016 18:05

(Cont.)

McCampbell Analytical, Inc.
"When Quality Counts"

1534 Willow Pass Road, Pittsburg, CA 94565-1701
Toll Free Telephone: (877) 252-9262 / Fax: (925) 252-9269
http://www.mccampbell.com / E-mail: main@mccampbell.com

Analytical Report

Client:	AEW Engineering, Inc.	**WorkOrder:**	1602A52
Date Received:	2/25/16 16:16	**Extraction Method:**	SW5030B
Date Prepared:	2/25/16-3/1/16	**Analytical Method:**	SW8260B
Project:	2015-29; Sausalito Gate 5 Characterization	**Unit:**	mg/kg

Volatile Organics by P&T and GC/MS (Basic Target List)

Client ID	Lab ID	Matrix	Date Collected	Instrument	Batch ID
COMP AEW-B5,B11 10-15'	**1602A52-006A**	**Soil**	**02/25/2016**	**GC16**	**117251**

Analytes	Result	RL	DF	Date Analyzed
1,1-Dichloropropene	ND	0.0050	1	02/29/2016 18:05
cis-1,3-Dichloropropene	ND	0.0050	1	02/29/2016 18:05
trans-1,3-Dichloropropene	ND	0.0050	1	02/29/2016 18:05
Diisopropyl ether (DIPE)	ND	0.0050	1	02/29/2016 18:05
Ethylbenzene	ND	0.0050	1	02/29/2016 18:05
Ethyl tert-butyl ether (ETBE)	ND	0.0050	1	02/29/2016 18:05
Freon 113	ND	0.0050	1	02/29/2016 18:05
Hexachlorobutadiene	ND	0.0050	1	02/29/2016 18:05
Hexachloroethane	ND	0.0050	1	02/29/2016 18:05
2-Hexanone	ND	0.0050	1	02/29/2016 18:05
Isopropylbenzene	ND	0.0050	1	02/29/2016 18:05
4-Isopropyl toluene	ND	0.0050	1	02/29/2016 18:05
Methyl-t-butyl ether (MTBE)	ND	0.0050	1	02/29/2016 18:05
Methylene chloride	ND	0.0050	1	02/29/2016 18:05
4-Methyl-2-pentanone (MIBK)	ND	0.0050	1	02/29/2016 18:05
Naphthalene	ND	0.0050	1	02/29/2016 18:05
n-Propyl benzene	ND	0.0050	1	02/29/2016 18:05
Styrene	ND	0.0050	1	02/29/2016 18:05
1,1,1,2-Tetrachloroethane	ND	0.0050	1	02/29/2016 18:05
1,1,2,2-Tetrachloroethane	ND	0.0050	1	02/29/2016 18:05
Tetrachloroethene	ND	0.0050	1	02/29/2016 18:05
Toluene	ND	0.0050	1	02/29/2016 18:05
1,2,3-Trichlorobenzene	ND	0.0050	1	02/29/2016 18:05
1,2,4-Trichlorobenzene	ND	0.0050	1	02/29/2016 18:05
1,1,1-Trichloroethane	ND	0.0050	1	02/29/2016 18:05
1,1,2-Trichloroethane	ND	0.0050	1	02/29/2016 18:05
Trichloroethene	ND	0.0050	1	02/29/2016 18:05
Trichlorofluoromethane	ND	0.0050	1	02/29/2016 18:05
1,2,3-Trichloropropane	ND	0.0050	1	02/29/2016 18:05
1,2,4-Trimethylbenzene	ND	0.0050	1	02/29/2016 18:05
1,3,5-Trimethylbenzene	ND	0.0050	1	02/29/2016 18:05
Vinyl Chloride	ND	0.0050	1	02/29/2016 18:05
Xylenes, Total	ND	0.0050	1	02/29/2016 18:05

(Cont.)

McCampbell Analytical, Inc.
"When Quality Counts"

1534 Willow Pass Road, Pittsburg, CA 94565-1701
Toll Free Telephone: (877) 252-9262 / Fax: (925) 252-9269
http://www.mccampbell.com / E-mail: main@mccampbell.com

Analytical Report

Client:	AEW Engineering, Inc.	**WorkOrder:**	1602A52
Date Received:	2/25/16 16:16	**Extraction Method:**	SW5030B
Date Prepared:	2/25/16-3/1/16	**Analytical Method:**	SW8260B
Project:	2015-29; Sausalito Gate 5 Characterization	**Unit:**	mg/kg

Volatile Organics by P&T and GC/MS (Basic Target List)

Client ID	Lab ID	Matrix	Date Collected	Instrument	Batch ID
COMP AEW-B5,B11 10-15'	**1602A52-006A**	**Soil**	**02/25/2016**	**GC16**	**117251**

Analytes	Result		RL	DF	Date Analyzed
Surrogates	**REC (%)**	**Qualifiers**	**Limits**		
Dibromofluoromethane	103		70-130		02/29/2016 18:05
Toluene-d8	109		70-130		02/29/2016 18:05
4-BFB	104		70-130		02/29/2016 18:05
Benzene-d6	82		60-140		02/29/2016 18:05
Ethylbenzene-d10	86		60-140		02/29/2016 18:05
1,2-DCB-d4	59	S	60-140		02/29/2016 18:05

Analyst(s): KF Analytical Comments: c2

(Cont.)

McCampbell Analytical, Inc.
"When Quality Counts"

1534 Willow Pass Road, Pittsburg, CA 94565-1701
Toll Free Telephone: (877) 252-9262 / Fax: (925) 252-9269
http://www.mccampbell.com / E-mail: main@mccampbell.com

Analytical Report

Client:	AEW Engineering, Inc.	**WorkOrder:**	1602A52
Date Received:	2/25/16 16:16	**Extraction Method:**	SW5030B
Date Prepared:	2/25/16-3/1/16	**Analytical Method:**	SW8260B
Project:	2015-29; Sausalito Gate 5 Characterization	**Unit:**	mg/kg

Volatile Organics by P&T and GC/MS (Basic Target List)

Client ID	Lab ID	Matrix	Date Collected	Instrument	Batch ID
COMP AEW-B6,B7 2.5-5'	**1602A52-007A**	**Soil**	**02/24/2016**	**GC16**	**117251**

Analytes	Result	RL	DF	Date Analyzed
Acetone	ND	0.10	1	02/29/2016 22:02
tert-Amyl methyl ether (TAME)	ND	0.0050	1	02/29/2016 22:02
Benzene	ND	0.0050	1	02/29/2016 22:02
Bromobenzene	ND	0.0050	1	02/29/2016 22:02
Bromochloromethane	ND	0.0050	1	02/29/2016 22:02
Bromodichloromethane	ND	0.0050	1	02/29/2016 22:02
Bromoform	ND	0.0050	1	02/29/2016 22:02
Bromomethane	ND	0.0050	1	02/29/2016 22:02
2-Butanone (MEK)	ND	0.020	1	02/29/2016 22:02
t-Butyl alcohol (TBA)	ND	0.050	1	02/29/2016 22:02
n-Butyl benzene	ND	0.0050	1	02/29/2016 22:02
sec-Butyl benzene	ND	0.0050	1	02/29/2016 22:02
tert-Butyl benzene	ND	0.0050	1	02/29/2016 22:02
Carbon Disulfide	ND	0.0050	1	02/29/2016 22:02
Carbon Tetrachloride	ND	0.0050	1	02/29/2016 22:02
Chlorobenzene	ND	0.0050	1	02/29/2016 22:02
Chloroethane	ND	0.0050	1	02/29/2016 22:02
Chloroform	ND	0.0050	1	02/29/2016 22:02
Chloromethane	ND	0.0050	1	02/29/2016 22:02
2-Chlorotoluene	ND	0.0050	1	02/29/2016 22:02
4-Chlorotoluene	ND	0.0050	1	02/29/2016 22:02
Dibromochloromethane	ND	0.0050	1	02/29/2016 22:02
1,2-Dibromo-3-chloropropane	ND	0.0040	1	02/29/2016 22:02
1,2-Dibromoethane (EDB)	ND	0.0040	1	02/29/2016 22:02
Dibromomethane	ND	0.0050	1	02/29/2016 22:02
1,2-Dichlorobenzene	ND	0.0050	1	02/29/2016 22:02
1,3-Dichlorobenzene	ND	0.0050	1	02/29/2016 22:02
1,4-Dichlorobenzene	ND	0.0050	1	02/29/2016 22:02
Dichlorodifluoromethane	ND	0.0050	1	02/29/2016 22:02
1,1-Dichloroethane	ND	0.0050	1	02/29/2016 22:02
1,2-Dichloroethane (1,2-DCA)	ND	0.0040	1	02/29/2016 22:02
1,1-Dichloroethene	ND	0.0050	1	02/29/2016 22:02
cis-1,2-Dichloroethene	ND	0.0050	1	02/29/2016 22:02
trans-1,2-Dichloroethene	ND	0.0050	1	02/29/2016 22:02
1,2-Dichloropropane	ND	0.0050	1	02/29/2016 22:02
1,3-Dichloropropane	ND	0.0050	1	02/29/2016 22:02
2,2-Dichloropropane	ND	0.0050	1	02/29/2016 22:02

(Cont.)

McCampbell Analytical, Inc.
"When Quality Counts"

1534 Willow Pass Road, Pittsburg, CA 94565-1701
Toll Free Telephone: (877) 252-9262 / Fax: (925) 252-9269
http://www.mccampbell.com / E-mail: main@mccampbell.com

Analytical Report

Client:	AEW Engineering, Inc.	**WorkOrder:**	1602A52
Date Received:	2/25/16 16:16	**Extraction Method:**	SW5030B
Date Prepared:	2/25/16-3/1/16	**Analytical Method:**	SW8260B
Project:	2015-29; Sausalito Gate 5 Characterization	**Unit:**	mg/kg

Volatile Organics by P&T and GC/MS (Basic Target List)

Client ID	Lab ID	Matrix	Date Collected	Instrument	Batch ID
COMP AEW-B6,B7 2.5-5'	**1602A52-007A**	**Soil**	**02/24/2016**	**GC16**	**117251**

Analytes	Result	RL	DF	Date Analyzed
1,1-Dichloropropene	ND	0.0050	1	02/29/2016 22:02
cis-1,3-Dichloropropene	ND	0.0050	1	02/29/2016 22:02
trans-1,3-Dichloropropene	ND	0.0050	1	02/29/2016 22:02
Diisopropyl ether (DIPE)	ND	0.0050	1	02/29/2016 22:02
Ethylbenzene	ND	0.0050	1	02/29/2016 22:02
Ethyl tert-butyl ether (ETBE)	ND	0.0050	1	02/29/2016 22:02
Freon 113	ND	0.0050	1	02/29/2016 22:02
Hexachlorobutadiene	ND	0.0050	1	02/29/2016 22:02
Hexachloroethane	ND	0.0050	1	02/29/2016 22:02
2-Hexanone	ND	0.0050	1	02/29/2016 22:02
Isopropylbenzene	ND	0.0050	1	02/29/2016 22:02
4-Isopropyl toluene	ND	0.0050	1	02/29/2016 22:02
Methyl-t-butyl ether (MTBE)	ND	0.0050	1	02/29/2016 22:02
Methylene chloride	ND	0.0050	1	02/29/2016 22:02
4-Methyl-2-pentanone (MIBK)	ND	0.0050	1	02/29/2016 22:02
Naphthalene	ND	0.0050	1	02/29/2016 22:02
n-Propyl benzene	ND	0.0050	1	02/29/2016 22:02
Styrene	ND	0.0050	1	02/29/2016 22:02
1,1,1,2-Tetrachloroethane	ND	0.0050	1	02/29/2016 22:02
1,1,2,2-Tetrachloroethane	ND	0.0050	1	02/29/2016 22:02
Tetrachloroethene	ND	0.0050	1	02/29/2016 22:02
Toluene	ND	0.0050	1	02/29/2016 22:02
1,2,3-Trichlorobenzene	ND	0.0050	1	02/29/2016 22:02
1,2,4-Trichlorobenzene	ND	0.0050	1	02/29/2016 22:02
1,1,1-Trichloroethane	ND	0.0050	1	02/29/2016 22:02
1,1,2-Trichloroethane	ND	0.0050	1	02/29/2016 22:02
Trichloroethene	ND	0.0050	1	02/29/2016 22:02
Trichlorofluoromethane	ND	0.0050	1	02/29/2016 22:02
1,2,3-Trichloropropane	ND	0.0050	1	02/29/2016 22:02
1,2,4-Trimethylbenzene	ND	0.0050	1	02/29/2016 22:02
1,3,5-Trimethylbenzene	ND	0.0050	1	02/29/2016 22:02
Vinyl Chloride	ND	0.0050	1	02/29/2016 22:02
Xylenes, Total	ND	0.0050	1	02/29/2016 22:02

(Cont.)

McCampbell Analytical, Inc.
"When Quality Counts"

1534 Willow Pass Road, Pittsburg, CA 94565-1701
Toll Free Telephone: (877) 252-9262 / Fax: (925) 252-9269
http://www.mccampbell.com / E-mail: main@mccampbell.com

Analytical Report

Client:	AEW Engineering, Inc.	**WorkOrder:**	1602A52
Date Received:	2/25/16 16:16	**Extraction Method:**	SW5030B
Date Prepared:	2/25/16-3/1/16	**Analytical Method:**	SW8260B
Project:	2015-29; Sausalito Gate 5 Characterization	**Unit:**	mg/kg

Volatile Organics by P&T and GC/MS (Basic Target List)

Client ID	Lab ID	Matrix	Date Collected	Instrument	Batch ID
COMP AEW-B6,B7 2.5-5'	**1602A52-007A**	**Soil**	**02/24/2016**	**GC16**	**117251**

Analytes	Result	RL	DF	Date Analyzed
Surrogates	REC (%)	Limits		
Dibromofluoromethane	104	70-130		02/29/2016 22:02
Toluene-d8	114	70-130		02/29/2016 22:02
4-BFB	112	70-130		02/29/2016 22:02
Benzene-d6	88	60-140		02/29/2016 22:02
Ethylbenzene-d10	91	60-140		02/29/2016 22:02
1,2-DCB-d4	64	60-140		02/29/2016 22:02

Analyst(s): KF

(Cont.)

McCampbell Analytical, Inc.
"When Quality Counts"

1534 Willow Pass Road, Pittsburg, CA 94565-1701
Toll Free Telephone: (877) 252-9262 / Fax: (925) 252-9269
http://www.mccampbell.com / E-mail: main@mccampbell.com

Analytical Report

Client:	AEW Engineering, Inc.	**WorkOrder:**	1602A52
Date Received:	2/25/16 16:16	**Extraction Method:**	SW5030B
Date Prepared:	2/25/16-3/1/16	**Analytical Method:**	SW8260B
Project:	2015-29; Sausalito Gate 5 Characterization	**Unit:**	mg/kg

Volatile Organics by P&T and GC/MS (Basic Target List)

Client ID	Lab ID	Matrix	Date Collected	Instrument	Batch ID
COMP AEW-B6,B7 10-15'	1602A52-008A	Soil	02/24/2016	GC18	117251

Analytes	Result	RL	DF	Date Analyzed
Acetone	ND	0.10	1	02/29/2016 18:57
tert-Amyl methyl ether (TAME)	ND	0.0050	1	02/29/2016 18:57
Benzene	ND	0.0050	1	02/29/2016 18:57
Bromobenzene	ND	0.0050	1	02/29/2016 18:57
Bromochloromethane	ND	0.0050	1	02/29/2016 18:57
Bromodichloromethane	ND	0.0050	1	02/29/2016 18:57
Bromoform	ND	0.0050	1	02/29/2016 18:57
Bromomethane	ND	0.0050	1	02/29/2016 18:57
2-Butanone (MEK)	ND	0.020	1	02/29/2016 18:57
t-Butyl alcohol (TBA)	ND	0.050	1	02/29/2016 18:57
n-Butyl benzene	ND	0.0050	1	02/29/2016 18:57
sec-Butyl benzene	ND	0.0050	1	02/29/2016 18:57
tert-Butyl benzene	ND	0.0050	1	02/29/2016 18:57
Carbon Disulfide	ND	0.0050	1	02/29/2016 18:57
Carbon Tetrachloride	ND	0.0050	1	02/29/2016 18:57
Chlorobenzene	ND	0.0050	1	02/29/2016 18:57
Chloroethane	ND	0.0050	1	02/29/2016 18:57
Chloroform	ND	0.0050	1	02/29/2016 18:57
Chloromethane	ND	0.0050	1	02/29/2016 18:57
2-Chlorotoluene	ND	0.0050	1	02/29/2016 18:57
4-Chlorotoluene	ND	0.0050	1	02/29/2016 18:57
Dibromochloromethane	ND	0.0050	1	02/29/2016 18:57
1,2-Dibromo-3-chloropropane	ND	0.0040	1	02/29/2016 18:57
1,2-Dibromoethane (EDB)	ND	0.0040	1	02/29/2016 18:57
Dibromomethane	ND	0.0050	1	02/29/2016 18:57
1,2-Dichlorobenzene	ND	0.0050	1	02/29/2016 18:57
1,3-Dichlorobenzene	ND	0.0050	1	02/29/2016 18:57
1,4-Dichlorobenzene	ND	0.0050	1	02/29/2016 18:57
Dichlorodifluoromethane	ND	0.0050	1	02/29/2016 18:57
1,1-Dichloroethane	ND	0.0050	1	02/29/2016 18:57
1,2-Dichloroethane (1,2-DCA)	ND	0.0040	1	02/29/2016 18:57
1,1-Dichloroethene	ND	0.0050	1	02/29/2016 18:57
cis-1,2-Dichloroethene	ND	0.0050	1	02/29/2016 18:57
trans-1,2-Dichloroethene	ND	0.0050	1	02/29/2016 18:57
1,2-Dichloropropane	ND	0.0050	1	02/29/2016 18:57
1,3-Dichloropropane	ND	0.0050	1	02/29/2016 18:57
2,2-Dichloropropane	ND	0.0050	1	02/29/2016 18:57

(Cont.)

McCampbell Analytical, Inc.
"When Quality Counts"

1534 Willow Pass Road, Pittsburg, CA 94565-1701
Toll Free Telephone: (877) 252-9262 / Fax: (925) 252-9269
http://www.mccampbell.com / E-mail: main@mccampbell.com

Analytical Report

Client:	AEW Engineering, Inc.	**WorkOrder:**	1602A52
Date Received:	2/25/16 16:16	**Extraction Method:**	SW5030B
Date Prepared:	2/25/16-3/1/16	**Analytical Method:**	SW8260B
Project:	2015-29; Sausalito Gate 5 Characterization	**Unit:**	mg/kg

Volatile Organics by P&T and GC/MS (Basic Target List)

Client ID	Lab ID	Matrix	Date Collected	Instrument	Batch ID
COMP AEW-B6,B7 10-15'	**1602A52-008A**	**Soil**	**02/24/2016**	**GC18**	**117251**

Analytes	Result	RL	DF	Date Analyzed
1,1-Dichloropropene	ND	0.0050	1	02/29/2016 18:57
cis-1,3-Dichloropropene	ND	0.0050	1	02/29/2016 18:57
trans-1,3-Dichloropropene	ND	0.0050	1	02/29/2016 18:57
Diisopropyl ether (DIPE)	ND	0.0050	1	02/29/2016 18:57
Ethylbenzene	ND	0.0050	1	02/29/2016 18:57
Ethyl tert-butyl ether (ETBE)	ND	0.0050	1	02/29/2016 18:57
Freon 113	ND	0.0050	1	02/29/2016 18:57
Hexachlorobutadiene	ND	0.0050	1	02/29/2016 18:57
Hexachloroethane	ND	0.0050	1	02/29/2016 18:57
2-Hexanone	ND	0.0050	1	02/29/2016 18:57
Isopropylbenzene	ND	0.0050	1	02/29/2016 18:57
4-Isopropyl toluene	ND	0.0050	1	02/29/2016 18:57
Methyl-t-butyl ether (MTBE)	ND	0.0050	1	02/29/2016 18:57
Methylene chloride	ND	0.0050	1	02/29/2016 18:57
4-Methyl-2-pentanone (MIBK)	ND	0.0050	1	02/29/2016 18:57
Naphthalene	ND	0.0050	1	02/29/2016 18:57
n-Propyl benzene	ND	0.0050	1	02/29/2016 18:57
Styrene	ND	0.0050	1	02/29/2016 18:57
1,1,1,2-Tetrachloroethane	ND	0.0050	1	02/29/2016 18:57
1,1,2,2-Tetrachloroethane	ND	0.0050	1	02/29/2016 18:57
Tetrachloroethene	ND	0.0050	1	02/29/2016 18:57
Toluene	ND	0.0050	1	02/29/2016 18:57
1,2,3-Trichlorobenzene	ND	0.0050	1	02/29/2016 18:57
1,2,4-Trichlorobenzene	ND	0.0050	1	02/29/2016 18:57
1,1,1-Trichloroethane	ND	0.0050	1	02/29/2016 18:57
1,1,2-Trichloroethane	ND	0.0050	1	02/29/2016 18:57
Trichloroethene	ND	0.0050	1	02/29/2016 18:57
Trichlorofluoromethane	ND	0.0050	1	02/29/2016 18:57
1,2,3-Trichloropropane	ND	0.0050	1	02/29/2016 18:57
1,2,4-Trimethylbenzene	ND	0.0050	1	02/29/2016 18:57
1,3,5-Trimethylbenzene	ND	0.0050	1	02/29/2016 18:57
Vinyl Chloride	ND	0.0050	1	02/29/2016 18:57
Xylenes, Total	ND	0.0050	1	02/29/2016 18:57

(Cont.)

McCampbell Analytical, Inc.
"When Quality Counts"

1534 Willow Pass Road, Pittsburg, CA 94565-1701
Toll Free Telephone: (877) 252-9262 / Fax: (925) 252-9269
http://www.mccampbell.com / E-mail: main@mccampbell.com

Analytical Report

Client:	AEW Engineering, Inc.	**WorkOrder:**	1602A52
Date Received:	2/25/16 16:16	**Extraction Method:**	SW5030B
Date Prepared:	2/25/16-3/1/16	**Analytical Method:**	SW8260B
Project:	2015-29; Sausalito Gate 5 Characterization	**Unit:**	mg/kg

Volatile Organics by P&T and GC/MS (Basic Target List)

Client ID	Lab ID	Matrix	Date Collected	Instrument	Batch ID
COMP AEW-B6,B7 10-15'	**1602A52-008A**	**Soil**	**02/24/2016**	**GC18**	**117251**

Analytes	Result	RL	DF	Date Analyzed
Surrogates	REC (%)	Limits		
Dibromofluoromethane	122	70-130		02/29/2016 18:57
Toluene-d8	130	70-130		02/29/2016 18:57
4-BFB	77	70-130		02/29/2016 18:57
Benzene-d6	70	60-140		02/29/2016 18:57
Ethylbenzene-d10	85	60-140		02/29/2016 18:57
1,2-DCB-d4	95	60-140		02/29/2016 18:57

Analyst(s): AK

(Cont.)

McCampbell Analytical, Inc.
"When Quality Counts"

1534 Willow Pass Road, Pittsburg, CA 94565-1701
Toll Free Telephone: (877) 252-9262 / Fax: (925) 252-9269
http://www.mccampbell.com / E-mail: main@mccampbell.com

Analytical Report

Client:	AEW Engineering, Inc.	**WorkOrder:**	1602A52
Date Received:	2/25/16 16:16	**Extraction Method:**	SW5030B
Date Prepared:	2/25/16-3/1/16	**Analytical Method:**	SW8260B
Project:	2015-29; Sausalito Gate 5 Characterization	**Unit:**	mg/kg

Volatile Organics by P&T and GC/MS (Basic Target List)

Client ID	Lab ID	Matrix	Date Collected	Instrument	Batch ID
COMP AEW-B8,B9 2.5-5'	1602A52-009A	Soil	02/24/2016	GC16	117251

Analytes	Result	RL	DF	Date Analyzed
Acetone	ND	0.10	1	03/01/2016 00:01
tert-Amyl methyl ether (TAME)	ND	0.0050	1	03/01/2016 00:01
Benzene	ND	0.0050	1	03/01/2016 00:01
Bromobenzene	ND	0.0050	1	03/01/2016 00:01
Bromochloromethane	ND	0.0050	1	03/01/2016 00:01
Bromodichloromethane	ND	0.0050	1	03/01/2016 00:01
Bromoform	ND	0.0050	1	03/01/2016 00:01
Bromomethane	ND	0.0050	1	03/01/2016 00:01
2-Butanone (MEK)	ND	0.020	1	03/01/2016 00:01
t-Butyl alcohol (TBA)	ND	0.050	1	03/01/2016 00:01
n-Butyl benzene	ND	0.0050	1	03/01/2016 00:01
sec-Butyl benzene	ND	0.0050	1	03/01/2016 00:01
tert-Butyl benzene	ND	0.0050	1	03/01/2016 00:01
Carbon Disulfide	ND	0.0050	1	03/01/2016 00:01
Carbon Tetrachloride	ND	0.0050	1	03/01/2016 00:01
Chlorobenzene	ND	0.0050	1	03/01/2016 00:01
Chloroethane	ND	0.0050	1	03/01/2016 00:01
Chloroform	ND	0.0050	1	03/01/2016 00:01
Chloromethane	ND	0.0050	1	03/01/2016 00:01
2-Chlorotoluene	ND	0.0050	1	03/01/2016 00:01
4-Chlorotoluene	ND	0.0050	1	03/01/2016 00:01
Dibromochloromethane	ND	0.0050	1	03/01/2016 00:01
1,2-Dibromo-3-chloropropane	ND	0.0040	1	03/01/2016 00:01
1,2-Dibromoethane (EDB)	ND	0.0040	1	03/01/2016 00:01
Dibromomethane	ND	0.0050	1	03/01/2016 00:01
1,2-Dichlorobenzene	ND	0.0050	1	03/01/2016 00:01
1,3-Dichlorobenzene	ND	0.0050	1	03/01/2016 00:01
1,4-Dichlorobenzene	ND	0.0050	1	03/01/2016 00:01
Dichlorodifluoromethane	ND	0.0050	1	03/01/2016 00:01
1,1-Dichloroethane	ND	0.0050	1	03/01/2016 00:01
1,2-Dichloroethane (1,2-DCA)	ND	0.0040	1	03/01/2016 00:01
1,1-Dichloroethene	ND	0.0050	1	03/01/2016 00:01
cis-1,2-Dichloroethene	ND	0.0050	1	03/01/2016 00:01
trans-1,2-Dichloroethene	ND	0.0050	1	03/01/2016 00:01
1,2-Dichloropropane	ND	0.0050	1	03/01/2016 00:01
1,3-Dichloropropane	ND	0.0050	1	03/01/2016 00:01
2,2-Dichloropropane	ND	0.0050	1	03/01/2016 00:01

(Cont.)

McCampbell Analytical, Inc.
"When Quality Counts"

1534 Willow Pass Road, Pittsburg, CA 94565-1701
Toll Free Telephone: (877) 252-9262 / Fax: (925) 252-9269
http://www.mccampbell.com / E-mail: main@mccampbell.com

Analytical Report

Client:	AEW Engineering, Inc.	**WorkOrder:**	1602A52
Date Received:	2/25/16 16:16	**Extraction Method:**	SW5030B
Date Prepared:	2/25/16-3/1/16	**Analytical Method:**	SW8260B
Project:	2015-29; Sausalito Gate 5 Characterization	**Unit:**	mg/kg

Volatile Organics by P&T and GC/MS (Basic Target List)

Client ID	Lab ID	Matrix	Date Collected	Instrument	Batch ID
COMP AEW-B8,B9 2.5-5'	1602A52-009A	Soil	02/24/2016	GC16	117251

Analytes	Result	RL	DF	Date Analyzed
1,1-Dichloropropene	ND	0.0050	1	03/01/2016 00:01
cis-1,3-Dichloropropene	ND	0.0050	1	03/01/2016 00:01
trans-1,3-Dichloropropene	ND	0.0050	1	03/01/2016 00:01
Diisopropyl ether (DIPE)	ND	0.0050	1	03/01/2016 00:01
Ethylbenzene	ND	0.0050	1	03/01/2016 00:01
Ethyl tert-butyl ether (ETBE)	ND	0.0050	1	03/01/2016 00:01
Freon 113	ND	0.0050	1	03/01/2016 00:01
Hexachlorobutadiene	ND	0.0050	1	03/01/2016 00:01
Hexachloroethane	ND	0.0050	1	03/01/2016 00:01
2-Hexanone	ND	0.0050	1	03/01/2016 00:01
Isopropylbenzene	ND	0.0050	1	03/01/2016 00:01
4-Isopropyl toluene	ND	0.0050	1	03/01/2016 00:01
Methyl-t-butyl ether (MTBE)	ND	0.0050	1	03/01/2016 00:01
Methylene chloride	ND	0.0050	1	03/01/2016 00:01
4-Methyl-2-pentanone (MIBK)	ND	0.0050	1	03/01/2016 00:01
Naphthalene	ND	0.0050	1	03/01/2016 00:01
n-Propyl benzene	ND	0.0050	1	03/01/2016 00:01
Styrene	ND	0.0050	1	03/01/2016 00:01
1,1,1,2-Tetrachloroethane	ND	0.0050	1	03/01/2016 00:01
1,1,2,2-Tetrachloroethane	ND	0.0050	1	03/01/2016 00:01
Tetrachloroethene	ND	0.0050	1	03/01/2016 00:01
Toluene	ND	0.0050	1	03/01/2016 00:01
1,2,3-Trichlorobenzene	ND	0.0050	1	03/01/2016 00:01
1,2,4-Trichlorobenzene	ND	0.0050	1	03/01/2016 00:01
1,1,1-Trichloroethane	ND	0.0050	1	03/01/2016 00:01
1,1,2-Trichloroethane	ND	0.0050	1	03/01/2016 00:01
Trichloroethene	ND	0.0050	1	03/01/2016 00:01
Trichlorofluoromethane	ND	0.0050	1	03/01/2016 00:01
1,2,3-Trichloropropane	ND	0.0050	1	03/01/2016 00:01
1,2,4-Trimethylbenzene	ND	0.0050	1	03/01/2016 00:01
1,3,5-Trimethylbenzene	ND	0.0050	1	03/01/2016 00:01
Vinyl Chloride	ND	0.0050	1	03/01/2016 00:01
Xylenes, Total	ND	0.0050	1	03/01/2016 00:01

(Cont.)

McCampbell Analytical, Inc.
"When Quality Counts"

1534 Willow Pass Road, Pittsburg, CA 94565-1701
Toll Free Telephone: (877) 252-9262 / Fax: (925) 252-9269
http://www.mccampbell.com / E-mail: main@mccampbell.com

Analytical Report

Client:	AEW Engineering, Inc.	**WorkOrder:**	1602A52
Date Received:	2/25/16 16:16	**Extraction Method:**	SW5030B
Date Prepared:	2/25/16-3/1/16	**Analytical Method:**	SW8260B
Project:	2015-29; Sausalito Gate 5 Characterization	**Unit:**	mg/kg

Volatile Organics by P&T and GC/MS (Basic Target List)

Client ID	Lab ID	Matrix	Date Collected	Instrument	Batch ID
COMP AEW-B8,B9 2.5-5'	**1602A52-009A**	**Soil**	**02/24/2016**	**GC16**	**117251**

Analytes	Result	RL	DF	Date Analyzed
Surrogates	REC (%)	Limits		
Dibromofluoromethane	104	70-130		03/01/2016 00:01
Toluene-d8	112	70-130		03/01/2016 00:01
4-BFB	117	70-130		03/01/2016 00:01
Benzene-d6	83	60-140		03/01/2016 00:01
Ethylbenzene-d10	87	60-140		03/01/2016 00:01
1,2-DCB-d4	61	60-140		03/01/2016 00:01

Analyst(s): KF

(Cont.)

McCampbell Analytical, Inc.
"When Quality Counts"

1534 Willow Pass Road, Pittsburg, CA 94565-1701
Toll Free Telephone: (877) 252-9262 / Fax: (925) 252-9269
http://www.mccampbell.com / E-mail: main@mccampbell.com

Analytical Report

Client:	AEW Engineering, Inc.	**WorkOrder:**	1602A52
Date Received:	2/25/16 16:16	**Extraction Method:**	SW5030B
Date Prepared:	2/25/16-3/1/16	**Analytical Method:**	SW8260B
Project:	2015-29; Sausalito Gate 5 Characterization	**Unit:**	mg/kg

Volatile Organics by P&T and GC/MS (Basic Target List)

Client ID	Lab ID	Matrix	Date Collected	Instrument	Batch ID
COMP AEW-B8,B9 10-15'	**1602A52-010A**	**Soil**	**02/24/2016**	**GC16**	**117251**

Analytes	Result	RL	DF	Date Analyzed
Acetone	ND	0.10	1	03/01/2016 17:33
tert-Amyl methyl ether (TAME)	ND	0.0050	1	03/01/2016 17:33
Benzene	ND	0.0050	1	03/01/2016 17:33
Bromobenzene	ND	0.0050	1	03/01/2016 17:33
Bromochloromethane	ND	0.0050	1	03/01/2016 17:33
Bromodichloromethane	ND	0.0050	1	03/01/2016 17:33
Bromoform	ND	0.0050	1	03/01/2016 17:33
Bromomethane	ND	0.0050	1	03/01/2016 17:33
2-Butanone (MEK)	ND	0.020	1	03/01/2016 17:33
t-Butyl alcohol (TBA)	ND	0.050	1	03/01/2016 17:33
n-Butyl benzene	ND	0.0050	1	03/01/2016 17:33
sec-Butyl benzene	ND	0.0050	1	03/01/2016 17:33
tert-Butyl benzene	ND	0.0050	1	03/01/2016 17:33
Carbon Disulfide	ND	0.0050	1	03/01/2016 17:33
Carbon Tetrachloride	ND	0.0050	1	03/01/2016 17:33
Chlorobenzene	ND	0.0050	1	03/01/2016 17:33
Chloroethane	ND	0.0050	1	03/01/2016 17:33
Chloroform	ND	0.0050	1	03/01/2016 17:33
Chloromethane	ND	0.0050	1	03/01/2016 17:33
2-Chlorotoluene	ND	0.0050	1	03/01/2016 17:33
4-Chlorotoluene	ND	0.0050	1	03/01/2016 17:33
Dibromochloromethane	ND	0.0050	1	03/01/2016 17:33
1,2-Dibromo-3-chloropropane	ND	0.0040	1	03/01/2016 17:33
1,2-Dibromoethane (EDB)	ND	0.0040	1	03/01/2016 17:33
Dibromomethane	ND	0.0050	1	03/01/2016 17:33
1,2-Dichlorobenzene	ND	0.0050	1	03/01/2016 17:33
1,3-Dichlorobenzene	ND	0.0050	1	03/01/2016 17:33
1,4-Dichlorobenzene	ND	0.0050	1	03/01/2016 17:33
Dichlorodifluoromethane	ND	0.0050	1	03/01/2016 17:33
1,1-Dichloroethane	ND	0.0050	1	03/01/2016 17:33
1,2-Dichloroethane (1,2-DCA)	ND	0.0040	1	03/01/2016 17:33
1,1-Dichloroethene	ND	0.0050	1	03/01/2016 17:33
cis-1,2-Dichloroethene	ND	0.0050	1	03/01/2016 17:33
trans-1,2-Dichloroethene	ND	0.0050	1	03/01/2016 17:33
1,2-Dichloropropane	ND	0.0050	1	03/01/2016 17:33
1,3-Dichloropropane	ND	0.0050	1	03/01/2016 17:33
2,2-Dichloropropane	ND	0.0050	1	03/01/2016 17:33

(Cont.)

McCampbell Analytical, Inc.
"When Quality Counts"

1534 Willow Pass Road, Pittsburg, CA 94565-1701
Toll Free Telephone: (877) 252-9262 / Fax: (925) 252-9269
http://www.mccampbell.com / E-mail: main@mccampbell.com

Analytical Report

Client:	AEW Engineering, Inc.	**WorkOrder:**	1602A52
Date Received:	2/25/16 16:16	**Extraction Method:**	SW5030B
Date Prepared:	2/25/16-3/1/16	**Analytical Method:**	SW8260B
Project:	2015-29; Sausalito Gate 5 Characterization	**Unit:**	mg/kg

Volatile Organics by P&T and GC/MS (Basic Target List)

Client ID	Lab ID	Matrix	Date Collected	Instrument	Batch ID
COMP AEW-B8,B9 10-15'	**1602A52-010A**	**Soil**	**02/24/2016**	**GC16**	**117251**

Analytes	Result	RL	DF	Date Analyzed
1,1-Dichloropropene	ND	0.0050	1	03/01/2016 17:33
cis-1,3-Dichloropropene	ND	0.0050	1	03/01/2016 17:33
trans-1,3-Dichloropropene	ND	0.0050	1	03/01/2016 17:33
Diisopropyl ether (DIPE)	ND	0.0050	1	03/01/2016 17:33
Ethylbenzene	ND	0.0050	1	03/01/2016 17:33
Ethyl tert-butyl ether (ETBE)	ND	0.0050	1	03/01/2016 17:33
Freon 113	ND	0.0050	1	03/01/2016 17:33
Hexachlorobutadiene	ND	0.0050	1	03/01/2016 17:33
Hexachloroethane	ND	0.0050	1	03/01/2016 17:33
2-Hexanone	ND	0.0050	1	03/01/2016 17:33
Isopropylbenzene	ND	0.0050	1	03/01/2016 17:33
4-Isopropyl toluene	ND	0.0050	1	03/01/2016 17:33
Methyl-t-butyl ether (MTBE)	ND	0.0050	1	03/01/2016 17:33
Methylene chloride	ND	0.0050	1	03/01/2016 17:33
4-Methyl-2-pentanone (MIBK)	ND	0.0050	1	03/01/2016 17:33
Naphthalene	ND	0.0050	1	03/01/2016 17:33
n-Propyl benzene	ND	0.0050	1	03/01/2016 17:33
Styrene	ND	0.0050	1	03/01/2016 17:33
1,1,1,2-Tetrachloroethane	ND	0.0050	1	03/01/2016 17:33
1,1,2,2-Tetrachloroethane	ND	0.0050	1	03/01/2016 17:33
Tetrachloroethene	ND	0.0050	1	03/01/2016 17:33
Toluene	ND	0.0050	1	03/01/2016 17:33
1,2,3-Trichlorobenzene	ND	0.0050	1	03/01/2016 17:33
1,2,4-Trichlorobenzene	ND	0.0050	1	03/01/2016 17:33
1,1,1-Trichloroethane	ND	0.0050	1	03/01/2016 17:33
1,1,2-Trichloroethane	ND	0.0050	1	03/01/2016 17:33
Trichloroethene	ND	0.0050	1	03/01/2016 17:33
Trichlorofluoromethane	ND	0.0050	1	03/01/2016 17:33
1,2,3-Trichloropropane	ND	0.0050	1	03/01/2016 17:33
1,2,4-Trimethylbenzene	ND	0.0050	1	03/01/2016 17:33
1,3,5-Trimethylbenzene	ND	0.0050	1	03/01/2016 17:33
Vinyl Chloride	ND	0.0050	1	03/01/2016 17:33
Xylenes, Total	ND	0.0050	1	03/01/2016 17:33

(Cont.)

McCampbell Analytical, Inc.
"When Quality Counts"

1534 Willow Pass Road, Pittsburg, CA 94565-1701
Toll Free Telephone: (877) 252-9262 / Fax: (925) 252-9269
http://www.mccampbell.com / E-mail: main@mccampbell.com

Analytical Report

Client:	AEW Engineering, Inc.	**WorkOrder:**	1602A52
Date Received:	2/25/16 16:16	**Extraction Method:**	SW5030B
Date Prepared:	2/25/16-3/1/16	**Analytical Method:**	SW8260B
Project:	2015-29; Sausalito Gate 5 Characterization	**Unit:**	mg/kg

Volatile Organics by P&T and GC/MS (Basic Target List)

Client ID	Lab ID	Matrix	Date Collected	Instrument	Batch ID
COMP AEW-B8,B9 10-15'	**1602A52-010A**	**Soil**	**02/24/2016**	**GC16**	**117251**

Analytes	Result	RL	DF	Date Analyzed
Surrogates	REC (%)	Limits		
Dibromofluoromethane	101	70-130		03/01/2016 17:33
Toluene-d8	117	70-130		03/01/2016 17:33
4-BFB	111	70-130		03/01/2016 17:33
Benzene-d6	84	60-140		03/01/2016 17:33
Ethylbenzene-d10	99	60-140		03/01/2016 17:33
1,2-DCB-d4	64	60-140		03/01/2016 17:33

Analyst(s): KF

(Cont.)

McCampbell Analytical, Inc.
"When Quality Counts"

1534 Willow Pass Road, Pittsburg, CA 94565-1701
Toll Free Telephone: (877) 252-9262 / Fax: (925) 252-9269
http://www.mccampbell.com / E-mail: main@mccampbell.com

Analytical Report

Client:	AEW Engineering, Inc.	**WorkOrder:**	1602A52
Date Received:	2/25/16 16:16	**Extraction Method:**	SW5030B
Date Prepared:	2/25/16-3/1/16	**Analytical Method:**	SW8260B
Project:	2015-29; Sausalito Gate 5 Characterization	**Unit:**	mg/kg

Volatile Organics by P&T and GC/MS (Basic Target List)

Client ID	Lab ID	Matrix	Date Collected	Instrument	Batch ID
COMP AEW-B10,B13 2.5-5'	**1602A52-011A**	**Soil**	**02/25/2016**	**GC16**	**117251**

Analytes	Result	RL	DF	Date Analyzed
Acetone	ND	0.10	1	03/01/2016 00:41
tert-Amyl methyl ether (TAME)	ND	0.0050	1	03/01/2016 00:41
Benzene	ND	0.0050	1	03/01/2016 00:41
Bromobenzene	ND	0.0050	1	03/01/2016 00:41
Bromochloromethane	ND	0.0050	1	03/01/2016 00:41
Bromodichloromethane	ND	0.0050	1	03/01/2016 00:41
Bromoform	ND	0.0050	1	03/01/2016 00:41
Bromomethane	ND	0.0050	1	03/01/2016 00:41
2-Butanone (MEK)	ND	0.020	1	03/01/2016 00:41
t-Butyl alcohol (TBA)	ND	0.050	1	03/01/2016 00:41
n-Butyl benzene	ND	0.0050	1	03/01/2016 00:41
sec-Butyl benzene	ND	0.0050	1	03/01/2016 00:41
tert-Butyl benzene	ND	0.0050	1	03/01/2016 00:41
Carbon Disulfide	ND	0.0050	1	03/01/2016 00:41
Carbon Tetrachloride	ND	0.0050	1	03/01/2016 00:41
Chlorobenzene	ND	0.0050	1	03/01/2016 00:41
Chloroethane	ND	0.0050	1	03/01/2016 00:41
Chloroform	ND	0.0050	1	03/01/2016 00:41
Chloromethane	ND	0.0050	1	03/01/2016 00:41
2-Chlorotoluene	ND	0.0050	1	03/01/2016 00:41
4-Chlorotoluene	ND	0.0050	1	03/01/2016 00:41
Dibromochloromethane	ND	0.0050	1	03/01/2016 00:41
1,2-Dibromo-3-chloropropane	ND	0.0040	1	03/01/2016 00:41
1,2-Dibromoethane (EDB)	ND	0.0040	1	03/01/2016 00:41
Dibromomethane	ND	0.0050	1	03/01/2016 00:41
1,2-Dichlorobenzene	ND	0.0050	1	03/01/2016 00:41
1,3-Dichlorobenzene	ND	0.0050	1	03/01/2016 00:41
1,4-Dichlorobenzene	ND	0.0050	1	03/01/2016 00:41
Dichlorodifluoromethane	ND	0.0050	1	03/01/2016 00:41
1,1-Dichloroethane	ND	0.0050	1	03/01/2016 00:41
1,2-Dichloroethane (1,2-DCA)	ND	0.0040	1	03/01/2016 00:41
1,1-Dichloroethene	ND	0.0050	1	03/01/2016 00:41
cis-1,2-Dichloroethene	ND	0.0050	1	03/01/2016 00:41
trans-1,2-Dichloroethene	ND	0.0050	1	03/01/2016 00:41
1,2-Dichloropropane	ND	0.0050	1	03/01/2016 00:41
1,3-Dichloropropane	ND	0.0050	1	03/01/2016 00:41
2,2-Dichloropropane	ND	0.0050	1	03/01/2016 00:41

(Cont.)

McCampbell Analytical, Inc.
"When Quality Counts"

1534 Willow Pass Road, Pittsburg, CA 94565-1701
Toll Free Telephone: (877) 252-9262 / Fax: (925) 252-9269
http://www.mccampbell.com / E-mail: main@mccampbell.com

Analytical Report

Client:	AEW Engineering, Inc.	**WorkOrder:**	1602A52
Date Received:	2/25/16 16:16	**Extraction Method:**	SW5030B
Date Prepared:	2/25/16-3/1/16	**Analytical Method:**	SW8260B
Project:	2015-29; Sausalito Gate 5 Characterization	**Unit:**	mg/kg

Volatile Organics by P&T and GC/MS (Basic Target List)

Client ID	Lab ID	Matrix	Date Collected	Instrument	Batch ID
COMP AEW-B10,B13 2.5-5'	**1602A52-011A**	**Soil**	**02/25/2016**	**GC16**	**117251**

Analytes	Result	RL	DF	Date Analyzed
1,1-Dichloropropene	ND	0.0050	1	03/01/2016 00:41
cis-1,3-Dichloropropene	ND	0.0050	1	03/01/2016 00:41
trans-1,3-Dichloropropene	ND	0.0050	1	03/01/2016 00:41
Diisopropyl ether (DIPE)	ND	0.0050	1	03/01/2016 00:41
Ethylbenzene	ND	0.0050	1	03/01/2016 00:41
Ethyl tert-butyl ether (ETBE)	ND	0.0050	1	03/01/2016 00:41
Freon 113	ND	0.0050	1	03/01/2016 00:41
Hexachlorobutadiene	ND	0.0050	1	03/01/2016 00:41
Hexachloroethane	ND	0.0050	1	03/01/2016 00:41
2-Hexanone	ND	0.0050	1	03/01/2016 00:41
Isopropylbenzene	ND	0.0050	1	03/01/2016 00:41
4-Isopropyl toluene	ND	0.0050	1	03/01/2016 00:41
Methyl-t-butyl ether (MTBE)	ND	0.0050	1	03/01/2016 00:41
Methylene chloride	ND	0.0050	1	03/01/2016 00:41
4-Methyl-2-pentanone (MIBK)	ND	0.0050	1	03/01/2016 00:41
Naphthalene	ND	0.0050	1	03/01/2016 00:41
n-Propyl benzene	ND	0.0050	1	03/01/2016 00:41
Styrene	ND	0.0050	1	03/01/2016 00:41
1,1,1,2-Tetrachloroethane	ND	0.0050	1	03/01/2016 00:41
1,1,2,2-Tetrachloroethane	ND	0.0050	1	03/01/2016 00:41
Tetrachloroethene	ND	0.0050	1	03/01/2016 00:41
Toluene	ND	0.0050	1	03/01/2016 00:41
1,2,3-Trichlorobenzene	ND	0.0050	1	03/01/2016 00:41
1,2,4-Trichlorobenzene	ND	0.0050	1	03/01/2016 00:41
1,1,1-Trichloroethane	ND	0.0050	1	03/01/2016 00:41
1,1,2-Trichloroethane	ND	0.0050	1	03/01/2016 00:41
Trichloroethene	ND	0.0050	1	03/01/2016 00:41
Trichlorofluoromethane	ND	0.0050	1	03/01/2016 00:41
1,2,3-Trichloropropane	ND	0.0050	1	03/01/2016 00:41
1,2,4-Trimethylbenzene	ND	0.0050	1	03/01/2016 00:41
1,3,5-Trimethylbenzene	ND	0.0050	1	03/01/2016 00:41
Vinyl Chloride	ND	0.0050	1	03/01/2016 00:41
Xylenes, Total	ND	0.0050	1	03/01/2016 00:41

(Cont.)

McCampbell Analytical, Inc.
"When Quality Counts"

1534 Willow Pass Road, Pittsburg, CA 94565-1701
Toll Free Telephone: (877) 252-9262 / Fax: (925) 252-9269
http://www.mccampbell.com / E-mail: main@mccampbell.com

Analytical Report

Client:	AEW Engineering, Inc.	**WorkOrder:**	1602A52
Date Received:	2/25/16 16:16	**Extraction Method:**	SW5030B
Date Prepared:	2/25/16-3/1/16	**Analytical Method:**	SW8260B
Project:	2015-29; Sausalito Gate 5 Characterization	**Unit:**	mg/kg

Volatile Organics by P&T and GC/MS (Basic Target List)

Client ID	Lab ID	Matrix	Date Collected	Instrument	Batch ID
COMP AEW-B10,B13 2.5-5'	**1602A52-011A**	**Soil**	**02/25/2016**	**GC16**	**117251**

Analytes	Result	RL	DF	Date Analyzed
Surrogates	REC (%)	Limits		
Dibromofluoromethane	105	70-130		03/01/2016 00:41
Toluene-d8	118	70-130		03/01/2016 00:41
4-BFB	124	70-130		03/01/2016 00:41
Benzene-d6	81	60-140		03/01/2016 00:41
Ethylbenzene-d10	81	60-140		03/01/2016 00:41
1,2-DCB-d4	60	60-140		03/01/2016 00:41

Analyst(s): KF

(Cont.)

McCampbell Analytical, Inc.
"When Quality Counts"

1534 Willow Pass Road, Pittsburg, CA 94565-1701
Toll Free Telephone: (877) 252-9262 / Fax: (925) 252-9269
http://www.mccampbell.com / E-mail: main@mccampbell.com

Analytical Report

Client:	AEW Engineering, Inc.	**WorkOrder:**	1602A52
Date Received:	2/25/16 16:16	**Extraction Method:**	SW5030B
Date Prepared:	2/25/16-3/1/16	**Analytical Method:**	SW8260B
Project:	2015-29; Sausalito Gate 5 Characterization	**Unit:**	mg/kg

Volatile Organics by P&T and GC/MS (Basic Target List)

Client ID	Lab ID	Matrix	Date Collected	Instrument	Batch ID
COMP AEW-B10,B13 10-15'	**1602A52-012A**	**Soil**	**02/25/2016**	**GC18**	**117251**

Analytes	Result	RL	DF	Date Analyzed
Acetone	ND	0.10	1	02/29/2016 14:15
tert-Amyl methyl ether (TAME)	ND	0.0050	1	02/29/2016 14:15
Benzene	ND	0.0050	1	02/29/2016 14:15
Bromobenzene	ND	0.0050	1	02/29/2016 14:15
Bromochloromethane	ND	0.0050	1	02/29/2016 14:15
Bromodichloromethane	ND	0.0050	1	02/29/2016 14:15
Bromoform	ND	0.0050	1	02/29/2016 14:15
Bromomethane	ND	0.0050	1	02/29/2016 14:15
2-Butanone (MEK)	ND	0.020	1	02/29/2016 14:15
t-Butyl alcohol (TBA)	ND	0.050	1	02/29/2016 14:15
n-Butyl benzene	ND	0.0050	1	02/29/2016 14:15
sec-Butyl benzene	ND	0.0050	1	02/29/2016 14:15
tert-Butyl benzene	ND	0.0050	1	02/29/2016 14:15
Carbon Disulfide	ND	0.0050	1	02/29/2016 14:15
Carbon Tetrachloride	ND	0.0050	1	02/29/2016 14:15
Chlorobenzene	ND	0.0050	1	02/29/2016 14:15
Chloroethane	ND	0.0050	1	02/29/2016 14:15
Chloroform	ND	0.0050	1	02/29/2016 14:15
Chloromethane	ND	0.0050	1	02/29/2016 14:15
2-Chlorotoluene	ND	0.0050	1	02/29/2016 14:15
4-Chlorotoluene	ND	0.0050	1	02/29/2016 14:15
Dibromochloromethane	ND	0.0050	1	02/29/2016 14:15
1,2-Dibromo-3-chloropropane	ND	0.0040	1	02/29/2016 14:15
1,2-Dibromoethane (EDB)	ND	0.0040	1	02/29/2016 14:15
Dibromomethane	ND	0.0050	1	02/29/2016 14:15
1,2-Dichlorobenzene	ND	0.0050	1	02/29/2016 14:15
1,3-Dichlorobenzene	ND	0.0050	1	02/29/2016 14:15
1,4-Dichlorobenzene	ND	0.0050	1	02/29/2016 14:15
Dichlorodifluoromethane	ND	0.0050	1	02/29/2016 14:15
1,1-Dichloroethane	ND	0.0050	1	02/29/2016 14:15
1,2-Dichloroethane (1,2-DCA)	ND	0.0040	1	02/29/2016 14:15
1,1-Dichloroethene	ND	0.0050	1	02/29/2016 14:15
cis-1,2-Dichloroethene	ND	0.0050	1	02/29/2016 14:15
trans-1,2-Dichloroethene	ND	0.0050	1	02/29/2016 14:15
1,2-Dichloropropane	ND	0.0050	1	02/29/2016 14:15
1,3-Dichloropropane	ND	0.0050	1	02/29/2016 14:15
2,2-Dichloropropane	ND	0.0050	1	02/29/2016 14:15

(Cont.)

McCampbell Analytical, Inc.
"When Quality Counts"

1534 Willow Pass Road, Pittsburg, CA 94565-1701
Toll Free Telephone: (877) 252-9262 / Fax: (925) 252-9269
http://www.mccampbell.com / E-mail: main@mccampbell.com

Analytical Report

Client:	AEW Engineering, Inc.	**WorkOrder:**	1602A52
Date Received:	2/25/16 16:16	**Extraction Method:**	SW5030B
Date Prepared:	2/25/16-3/1/16	**Analytical Method:**	SW8260B
Project:	2015-29; Sausalito Gate 5 Characterization	**Unit:**	mg/kg

Volatile Organics by P&T and GC/MS (Basic Target List)

Client ID	Lab ID	Matrix	Date Collected	Instrument	Batch ID
COMP AEW-B10,B13 10-15'	**1602A52-012A**	**Soil**	**02/25/2016**	**GC18**	**117251**

Analytes	Result	RL	DF	Date Analyzed
1,1-Dichloropropene	ND	0.0050	1	02/29/2016 14:15
cis-1,3-Dichloropropene	ND	0.0050	1	02/29/2016 14:15
trans-1,3-Dichloropropene	ND	0.0050	1	02/29/2016 14:15
Diisopropyl ether (DIPE)	ND	0.0050	1	02/29/2016 14:15
Ethylbenzene	ND	0.0050	1	02/29/2016 14:15
Ethyl tert-butyl ether (ETBE)	ND	0.0050	1	02/29/2016 14:15
Freon 113	ND	0.0050	1	02/29/2016 14:15
Hexachlorobutadiene	ND	0.0050	1	02/29/2016 14:15
Hexachloroethane	ND	0.0050	1	02/29/2016 14:15
2-Hexanone	ND	0.0050	1	02/29/2016 14:15
Isopropylbenzene	ND	0.0050	1	02/29/2016 14:15
4-Isopropyl toluene	ND	0.0050	1	02/29/2016 14:15
Methyl-t-butyl ether (MTBE)	ND	0.0050	1	02/29/2016 14:15
Methylene chloride	ND	0.0050	1	02/29/2016 14:15
4-Methyl-2-pentanone (MIBK)	ND	0.0050	1	02/29/2016 14:15
Naphthalene	ND	0.0050	1	02/29/2016 14:15
n-Propyl benzene	ND	0.0050	1	02/29/2016 14:15
Styrene	ND	0.0050	1	02/29/2016 14:15
1,1,1,2-Tetrachloroethane	ND	0.0050	1	02/29/2016 14:15
1,1,2,2-Tetrachloroethane	ND	0.0050	1	02/29/2016 14:15
Tetrachloroethene	ND	0.0050	1	02/29/2016 14:15
Toluene	ND	0.0050	1	02/29/2016 14:15
1,2,3-Trichlorobenzene	ND	0.0050	1	02/29/2016 14:15
1,2,4-Trichlorobenzene	ND	0.0050	1	02/29/2016 14:15
1,1,1-Trichloroethane	ND	0.0050	1	02/29/2016 14:15
1,1,2-Trichloroethane	ND	0.0050	1	02/29/2016 14:15
Trichloroethene	ND	0.0050	1	02/29/2016 14:15
Trichlorofluoromethane	ND	0.0050	1	02/29/2016 14:15
1,2,3-Trichloropropane	ND	0.0050	1	02/29/2016 14:15
1,2,4-Trimethylbenzene	ND	0.0050	1	02/29/2016 14:15
1,3,5-Trimethylbenzene	ND	0.0050	1	02/29/2016 14:15
Vinyl Chloride	ND	0.0050	1	02/29/2016 14:15
Xylenes, Total	ND	0.0050	1	02/29/2016 14:15

(Cont.)

McCampbell Analytical, Inc.
"When Quality Counts"

1534 Willow Pass Road, Pittsburg, CA 94565-1701
Toll Free Telephone: (877) 252-9262 / Fax: (925) 252-9269
http://www.mccampbell.com / E-mail: main@mccampbell.com

Analytical Report

Client:	AEW Engineering, Inc.	**WorkOrder:**	1602A52
Date Received:	2/25/16 16:16	**Extraction Method:**	SW5030B
Date Prepared:	2/25/16-3/1/16	**Analytical Method:**	SW8260B
Project:	2015-29; Sausalito Gate 5 Characterization	**Unit:**	mg/kg

Volatile Organics by P&T and GC/MS (Basic Target List)

Client ID	Lab ID	Matrix	Date Collected	Instrument	Batch ID
COMP AEW-B10,B13 10-15'	**1602A52-012A**	**Soil**	**02/25/2016**	**GC18**	**117251**

Analytes	Result	RL	DF	Date Analyzed
Surrogates	REC (%)	Limits		
Dibromofluoromethane	121	70-130		02/29/2016 14:15
Toluene-d8	130	70-130		02/29/2016 14:15
4-BFB	79	70-130		02/29/2016 14:15
Benzene-d6	112	60-140		02/29/2016 14:15
Ethylbenzene-d10	104	60-140		02/29/2016 14:15
1,2-DCB-d4	95	60-140		02/29/2016 14:15

Analyst(s): AK

(Cont.)

McCampbell Analytical, Inc.
"When Quality Counts"

1534 Willow Pass Road, Pittsburg, CA 94565-1701
Toll Free Telephone: (877) 252-9262 / Fax: (925) 252-9269
http://www.mccampbell.com / E-mail: main@mccampbell.com

Analytical Report

Client:	AEW Engineering, Inc.	**WorkOrder:**	1602A52
Date Received:	2/25/16 16:16	**Extraction Method:**	SW5030B
Date Prepared:	2/25/16-3/1/16	**Analytical Method:**	SW8260B
Project:	2015-29; Sausalito Gate 5 Characterization	**Unit:**	mg/kg

Volatile Organics by P&T and GC/MS (Basic Target List)

Client ID	Lab ID	Matrix	Date Collected	Instrument	Batch ID
COMP AEW-B12,B14 2.5-5'	**1602A52-013A**	**Soil**	**02/25/2016**	**GC16**	**117251**

Analytes	Result	RL	DF	Date Analyzed
Acetone	ND	0.10	1	02/29/2016 18:44
tert-Amyl methyl ether (TAME)	ND	0.0050	1	02/29/2016 18:44
Benzene	ND	0.0050	1	02/29/2016 18:44
Bromobenzene	ND	0.0050	1	02/29/2016 18:44
Bromochloromethane	ND	0.0050	1	02/29/2016 18:44
Bromodichloromethane	ND	0.0050	1	02/29/2016 18:44
Bromoform	ND	0.0050	1	02/29/2016 18:44
Bromomethane	ND	0.0050	1	02/29/2016 18:44
2-Butanone (MEK)	ND	0.020	1	02/29/2016 18:44
t-Butyl alcohol (TBA)	ND	0.050	1	02/29/2016 18:44
n-Butyl benzene	ND	0.0050	1	02/29/2016 18:44
sec-Butyl benzene	ND	0.0050	1	02/29/2016 18:44
tert-Butyl benzene	ND	0.0050	1	02/29/2016 18:44
Carbon Disulfide	ND	0.0050	1	02/29/2016 18:44
Carbon Tetrachloride	ND	0.0050	1	02/29/2016 18:44
Chlorobenzene	ND	0.0050	1	02/29/2016 18:44
Chloroethane	ND	0.0050	1	02/29/2016 18:44
Chloroform	ND	0.0050	1	02/29/2016 18:44
Chloromethane	ND	0.0050	1	02/29/2016 18:44
2-Chlorotoluene	ND	0.0050	1	02/29/2016 18:44
4-Chlorotoluene	ND	0.0050	1	02/29/2016 18:44
Dibromochloromethane	ND	0.0050	1	02/29/2016 18:44
1,2-Dibromo-3-chloropropane	ND	0.0040	1	02/29/2016 18:44
1,2-Dibromoethane (EDB)	ND	0.0040	1	02/29/2016 18:44
Dibromomethane	ND	0.0050	1	02/29/2016 18:44
1,2-Dichlorobenzene	ND	0.0050	1	02/29/2016 18:44
1,3-Dichlorobenzene	ND	0.0050	1	02/29/2016 18:44
1,4-Dichlorobenzene	ND	0.0050	1	02/29/2016 18:44
Dichlorodifluoromethane	ND	0.0050	1	02/29/2016 18:44
1,1-Dichloroethane	ND	0.0050	1	02/29/2016 18:44
1,2-Dichloroethane (1,2-DCA)	ND	0.0040	1	02/29/2016 18:44
1,1-Dichloroethene	ND	0.0050	1	02/29/2016 18:44
cis-1,2-Dichloroethene	ND	0.0050	1	02/29/2016 18:44
trans-1,2-Dichloroethene	ND	0.0050	1	02/29/2016 18:44
1,2-Dichloropropane	ND	0.0050	1	02/29/2016 18:44
1,3-Dichloropropane	ND	0.0050	1	02/29/2016 18:44
2,2-Dichloropropane	ND	0.0050	1	02/29/2016 18:44

(Cont.)

McCampbell Analytical, Inc.
"When Quality Counts"

1534 Willow Pass Road, Pittsburg, CA 94565-1701
Toll Free Telephone: (877) 252-9262 / Fax: (925) 252-9269
http://www.mccampbell.com / E-mail: main@mccampbell.com

Analytical Report

Client:	AEW Engineering, Inc.	**WorkOrder:**	1602A52
Date Received:	2/25/16 16:16	**Extraction Method:**	SW5030B
Date Prepared:	2/25/16-3/1/16	**Analytical Method:**	SW8260B
Project:	2015-29; Sausalito Gate 5 Characterization	**Unit:**	mg/kg

Volatile Organics by P&T and GC/MS (Basic Target List)

Client ID	Lab ID	Matrix	Date Collected	Instrument	Batch ID
COMP AEW-B12,B14 2.5-5'	1602A52-013A	Soil	02/25/2016	GC16	117251

Analytes	Result	RL	DF	Date Analyzed
1,1-Dichloropropene	ND	0.0050	1	02/29/2016 18:44
cis-1,3-Dichloropropene	ND	0.0050	1	02/29/2016 18:44
trans-1,3-Dichloropropene	ND	0.0050	1	02/29/2016 18:44
Diisopropyl ether (DIPE)	ND	0.0050	1	02/29/2016 18:44
Ethylbenzene	ND	0.0050	1	02/29/2016 18:44
Ethyl tert-butyl ether (ETBE)	ND	0.0050	1	02/29/2016 18:44
Freon 113	ND	0.0050	1	02/29/2016 18:44
Hexachlorobutadiene	ND	0.0050	1	02/29/2016 18:44
Hexachloroethane	ND	0.0050	1	02/29/2016 18:44
2-Hexanone	ND	0.0050	1	02/29/2016 18:44
Isopropylbenzene	ND	0.0050	1	02/29/2016 18:44
4-Isopropyl toluene	ND	0.0050	1	02/29/2016 18:44
Methyl-t-butyl ether (MTBE)	ND	0.0050	1	02/29/2016 18:44
Methylene chloride	ND	0.0050	1	02/29/2016 18:44
4-Methyl-2-pentanone (MIBK)	ND	0.0050	1	02/29/2016 18:44
Naphthalene	ND	0.0050	1	02/29/2016 18:44
n-Propyl benzene	ND	0.0050	1	02/29/2016 18:44
Styrene	ND	0.0050	1	02/29/2016 18:44
1,1,1,2-Tetrachloroethane	ND	0.0050	1	02/29/2016 18:44
1,1,2,2-Tetrachloroethane	ND	0.0050	1	02/29/2016 18:44
Tetrachloroethene	ND	0.0050	1	02/29/2016 18:44
Toluene	ND	0.0050	1	02/29/2016 18:44
1,2,3-Trichlorobenzene	ND	0.0050	1	02/29/2016 18:44
1,2,4-Trichlorobenzene	ND	0.0050	1	02/29/2016 18:44
1,1,1-Trichloroethane	ND	0.0050	1	02/29/2016 18:44
1,1,2-Trichloroethane	ND	0.0050	1	02/29/2016 18:44
Trichloroethene	ND	0.0050	1	02/29/2016 18:44
Trichlorofluoromethane	ND	0.0050	1	02/29/2016 18:44
1,2,3-Trichloropropane	ND	0.0050	1	02/29/2016 18:44
1,2,4-Trimethylbenzene	ND	0.0050	1	02/29/2016 18:44
1,3,5-Trimethylbenzene	ND	0.0050	1	02/29/2016 18:44
Vinyl Chloride	ND	0.0050	1	02/29/2016 18:44
Xylenes, Total	ND	0.0050	1	02/29/2016 18:44

(Cont.)

McCampbell Analytical, Inc.
"When Quality Counts"

1534 Willow Pass Road, Pittsburg, CA 94565-1701
Toll Free Telephone: (877) 252-9262 / Fax: (925) 252-9269
http://www.mccampbell.com / E-mail: main@mccampbell.com

Analytical Report

Client:	AEW Engineering, Inc.	**WorkOrder:**	1602A52
Date Received:	2/25/16 16:16	**Extraction Method:**	SW5030B
Date Prepared:	2/25/16-3/1/16	**Analytical Method:**	SW8260B
Project:	2015-29; Sausalito Gate 5 Characterization	**Unit:**	mg/kg

Volatile Organics by P&T and GC/MS (Basic Target List)

Client ID	Lab ID	Matrix	Date Collected	Instrument	Batch ID
COMP AEW-B12,B14 2.5-5'	**1602A52-013A**	**Soil**	**02/25/2016**	**GC16**	**117251**

Analytes	Result	RL	DF	Date Analyzed
Surrogates	REC (%)	Limits		
Dibromofluoromethane	102	70-130		02/29/2016 18:44
Toluene-d8	107	70-130		02/29/2016 18:44
4-BFB	108	70-130		02/29/2016 18:44
Benzene-d6	83	60-140		02/29/2016 18:44
Ethylbenzene-d10	83	60-140		02/29/2016 18:44
1,2-DCB-d4	61	60-140		02/29/2016 18:44

Analyst(s): KF

(Cont.)

McCampbell Analytical, Inc.
"When Quality Counts"

1534 Willow Pass Road, Pittsburg, CA 94565-1701
Toll Free Telephone: (877) 252-9262 / Fax: (925) 252-9269
http://www.mccampbell.com / E-mail: main@mccampbell.com

Analytical Report

Client:	AEW Engineering, Inc.	**WorkOrder:**	1602A52
Date Received:	2/25/16 16:16	**Extraction Method:**	SW5030B
Date Prepared:	2/25/16-3/1/16	**Analytical Method:**	SW8260B
Project:	2015-29; Sausalito Gate 5 Characterization	**Unit:**	mg/kg

Volatile Organics by P&T and GC/MS (Basic Target List)

Client ID	Lab ID	Matrix	Date Collected	Instrument	Batch ID
COMP AEW-B12,B14 10-15'	1602A52-014A	Soil	02/25/2016	GC16	117251

Analytes	Result	RL	DF	Date Analyzed
Acetone	ND	2.0	20	03/02/2016 14:59
tert-Amyl methyl ether (TAME)	ND	0.10	20	03/02/2016 14:59
Benzene	ND	0.10	20	03/02/2016 14:59
Bromobenzene	ND	0.10	20	03/02/2016 14:59
Bromochloromethane	ND	0.10	20	03/02/2016 14:59
Bromodichloromethane	ND	0.10	20	03/02/2016 14:59
Bromoform	ND	0.10	20	03/02/2016 14:59
Bromomethane	ND	0.10	20	03/02/2016 14:59
2-Butanone (MEK)	ND	0.40	20	03/02/2016 14:59
t-Butyl alcohol (TBA)	ND	1.0	20	03/02/2016 14:59
n-Butyl benzene	ND	0.10	20	03/02/2016 14:59
sec-Butyl benzene	ND	0.10	20	03/02/2016 14:59
tert-Butyl benzene	ND	0.10	20	03/02/2016 14:59
Carbon Disulfide	ND	0.10	20	03/02/2016 14:59
Carbon Tetrachloride	ND	0.10	20	03/02/2016 14:59
Chlorobenzene	ND	0.10	20	03/02/2016 14:59
Chloroethane	ND	0.10	20	03/02/2016 14:59
Chloroform	ND	0.10	20	03/02/2016 14:59
Chloromethane	ND	0.10	20	03/02/2016 14:59
2-Chlorotoluene	ND	0.10	20	03/02/2016 14:59
4-Chlorotoluene	ND	0.10	20	03/02/2016 14:59
Dibromochloromethane	ND	0.10	20	03/02/2016 14:59
1,2-Dibromo-3-chloropropane	ND	0.080	20	03/02/2016 14:59
1,2-Dibromoethane (EDB)	ND	0.080	20	03/02/2016 14:59
Dibromomethane	ND	0.10	20	03/02/2016 14:59
1,2-Dichlorobenzene	ND	0.10	20	03/02/2016 14:59
1,3-Dichlorobenzene	ND	0.10	20	03/02/2016 14:59
1,4-Dichlorobenzene	ND	0.10	20	03/02/2016 14:59
Dichlorodifluoromethane	ND	0.10	20	03/02/2016 14:59
1,1-Dichloroethane	ND	0.10	20	03/02/2016 14:59
1,2-Dichloroethane (1,2-DCA)	ND	0.080	20	03/02/2016 14:59
1,1-Dichloroethene	ND	0.10	20	03/02/2016 14:59
cis-1,2-Dichloroethene	ND	0.10	20	03/02/2016 14:59
trans-1,2-Dichloroethene	ND	0.10	20	03/02/2016 14:59
1,2-Dichloropropane	ND	0.10	20	03/02/2016 14:59
1,3-Dichloropropane	ND	0.10	20	03/02/2016 14:59
2,2-Dichloropropane	ND	0.10	20	03/02/2016 14:59

(Cont.)

McCampbell Analytical, Inc.
"When Quality Counts"

1534 Willow Pass Road, Pittsburg, CA 94565-1701
Toll Free Telephone: (877) 252-9262 / Fax: (925) 252-9269
http://www.mccampbell.com / E-mail: main@mccampbell.com

Analytical Report

Client:	AEW Engineering, Inc.	**WorkOrder:**	1602A52
Date Received:	2/25/16 16:16	**Extraction Method:**	SW5030B
Date Prepared:	2/25/16-3/1/16	**Analytical Method:**	SW8260B
Project:	2015-29; Sausalito Gate 5 Characterization	**Unit:**	mg/kg

Volatile Organics by P&T and GC/MS (Basic Target List)

Client ID	Lab ID	Matrix	Date Collected	Instrument	Batch ID
COMP AEW-B12,B14 10-15'	**1602A52-014A**	**Soil**	**02/25/2016**	**GC16**	**117251**

Analytes	Result	RL	DF	Date Analyzed
1,1-Dichloropropene	ND	0.10	20	03/02/2016 14:59
cis-1,3-Dichloropropene	ND	0.10	20	03/02/2016 14:59
trans-1,3-Dichloropropene	ND	0.10	20	03/02/2016 14:59
Diisopropyl ether (DIPE)	ND	0.10	20	03/02/2016 14:59
Ethylbenzene	ND	0.10	20	03/02/2016 14:59
Ethyl tert-butyl ether (ETBE)	ND	0.10	20	03/02/2016 14:59
Freon 113	ND	0.10	20	03/02/2016 14:59
Hexachlorobutadiene	ND	0.10	20	03/02/2016 14:59
Hexachloroethane	ND	0.10	20	03/02/2016 14:59
2-Hexanone	ND	0.10	20	03/02/2016 14:59
Isopropylbenzene	ND	0.10	20	03/02/2016 14:59
4-Isopropyl toluene	ND	0.10	20	03/02/2016 14:59
Methyl-t-butyl ether (MTBE)	ND	0.10	20	03/02/2016 14:59
Methylene chloride	ND	0.10	20	03/02/2016 14:59
4-Methyl-2-pentanone (MIBK)	ND	0.10	20	03/02/2016 14:59
Naphthalene	**0.75**	0.10	20	03/02/2016 14:59
n-Propyl benzene	ND	0.10	20	03/02/2016 14:59
Styrene	ND	0.10	20	03/02/2016 14:59
1,1,1,2-Tetrachloroethane	ND	0.10	20	03/02/2016 14:59
1,1,2,2-Tetrachloroethane	ND	0.10	20	03/02/2016 14:59
Tetrachloroethene	ND	0.10	20	03/02/2016 14:59
Toluene	ND	0.10	20	03/02/2016 14:59
1,2,3-Trichlorobenzene	ND	0.10	20	03/02/2016 14:59
1,2,4-Trichlorobenzene	ND	0.10	20	03/02/2016 14:59
1,1,1-Trichloroethane	ND	0.10	20	03/02/2016 14:59
1,1,2-Trichloroethane	ND	0.10	20	03/02/2016 14:59
Trichloroethene	ND	0.10	20	03/02/2016 14:59
Trichlorofluoromethane	ND	0.10	20	03/02/2016 14:59
1,2,3-Trichloropropane	ND	0.10	20	03/02/2016 14:59
1,2,4-Trimethylbenzene	ND	0.10	20	03/02/2016 14:59
1,3,5-Trimethylbenzene	ND	0.10	20	03/02/2016 14:59
Vinyl Chloride	ND	0.10	20	03/02/2016 14:59
Xylenes, Total	ND	0.10	20	03/02/2016 14:59

(Cont.)

McCampbell Analytical, Inc.
"When Quality Counts"

1534 Willow Pass Road, Pittsburg, CA 94565-1701
Toll Free Telephone: (877) 252-9262 / Fax: (925) 252-9269
http://www.mccampbell.com / E-mail: main@mccampbell.com

Analytical Report

Client:	AEW Engineering, Inc.	**WorkOrder:**	1602A52
Date Received:	2/25/16 16:16	**Extraction Method:**	SW5030B
Date Prepared:	2/25/16-3/1/16	**Analytical Method:**	SW8260B
Project:	2015-29; Sausalito Gate 5 Characterization	**Unit:**	mg/kg

Volatile Organics by P&T and GC/MS (Basic Target List)

Client ID	Lab ID	Matrix	Date Collected	Instrument	Batch ID
COMP AEW-B12,B14 10-15'	**1602A52-014A**	**Soil**	**02/25/2016**	**GC16**	**117251**

Analytes	Result	RL	DF	Date Analyzed
Surrogates	REC (%)	Limits		
Dibromofluoromethane	104	70-130		03/02/2016 14:59
Toluene-d8	99	70-130		03/02/2016 14:59
4-BFB	92	70-130		03/02/2016 14:59
Benzene-d6	111	60-140		03/02/2016 14:59
Ethylbenzene-d10	108	60-140		03/02/2016 14:59
1,2-DCB-d4	92	60-140		03/02/2016 14:59

Analyst(s): AK

McCampbell Analytical, Inc.
"When Quality Counts"

1534 Willow Pass Road, Pittsburg, CA 94565-1701
Toll Free Telephone: (877) 252-9262 / Fax: (925) 252-9269
http://www.mccampbell.com / E-mail: main@mccampbell.com

Analytical Report

Client:	AEW Engineering, Inc.	**WorkOrder:**	1602A52
Date Received:	2/25/16 16:16	**Extraction Method:**	SW3550B/3640A
Date Prepared:	2/26/16	**Analytical Method:**	SW8270C
Project:	2015-29; Sausalito Gate 5 Characterization	**Unit:**	mg/Kg

Semi-Volatile Organics by GC/MS (Basic Target List) w/ GPC Clean Up

Client ID	Lab ID	Matrix	Date Collected	Instrument	Batch ID
COMP AEW-B1,B2 2.5-5'	**1602A52-001A**	**Soil**	**02/24/2016**	**GC21**	**117265**

Analytes	Result	Qualifiers	MDL	RL	DF	Date Analyzed
Acenaphthene	ND		0.14	0.25	1	03/02/2016 11:15
Acenaphthylene	ND		0.14	0.25	1	03/02/2016 11:15
Acetochlor	ND		0.25	0.25	1	03/02/2016 11:15
Anthracene	ND		0.14	0.25	1	03/02/2016 11:15
Benzidine	ND		0.23	1.3	1	03/02/2016 11:15
Benzo (a) anthracene	ND		0.14	0.25	1	03/02/2016 11:15
Benzo (b) fluoranthene	ND		0.14	0.25	1	03/02/2016 11:15
Benzo (k) fluoranthene	ND		0.16	0.25	1	03/02/2016 11:15
Benzo (g,h,i) perylene	ND		0.15	0.25	1	03/02/2016 11:15
Benzo (a) pyrene	ND		0.14	0.25	1	03/02/2016 11:15
Benzyl Alcohol	ND		0.51	1.3	1	03/02/2016 11:15
1,1-Biphenyl	ND		0.15	0.25	1	03/02/2016 11:15
Bis (2-chloroethoxy) Methane	ND		0.14	0.25	1	03/02/2016 11:15
Bis (2-chloroethyl) Ether	ND		0.13	0.25	1	03/02/2016 11:15
Bis (2-chloroisopropyl) Ether	ND		0.12	0.25	1	03/02/2016 11:15
Bis (2-ethylhexyl) Adipate	ND		0.25	0.25	1	03/02/2016 11:15
Bis (2-ethylhexyl) Phthalate	**0.20**	J	0.13	0.25	1	03/02/2016 11:15
4-Bromophenyl Phenyl Ether	ND		0.16	0.25	1	03/02/2016 11:15
Butylbenzyl Phthalate	**0.15**	J	0.13	0.25	1	03/02/2016 11:15
4-Chloroaniline	ND		0.13	0.25	1	03/02/2016 11:15
4-Chloro-3-methylphenol	ND		0.12	0.25	1	03/02/2016 11:15
2-Chloronaphthalene	ND		0.16	0.25	1	03/02/2016 11:15
2-Chlorophenol	ND		0.14	0.25	1	03/02/2016 11:15
4-Chlorophenyl Phenyl Ether	ND		0.15	0.25	1	03/02/2016 11:15
Chrysene	ND		0.14	0.25	1	03/02/2016 11:15
Dibenzo (a,h) anthracene	ND		0.16	0.25	1	03/02/2016 11:15
Dibenzofuran	ND		0.13	0.25	1	03/02/2016 11:15
Di-n-butyl Phthalate	ND		0.13	0.25	1	03/02/2016 11:15
1,2-Dichlorobenzene	ND		0.12	0.25	1	03/02/2016 11:15
1,3-Dichlorobenzene	ND		0.14	0.25	1	03/02/2016 11:15
1,4-Dichlorobenzene	ND		0.13	0.25	1	03/02/2016 11:15
3,3-Dichlorobenzidine	**0.14**	J	0.12	0.50	1	03/02/2016 11:15
2,4-Dichlorophenol	ND		0.13	0.25	1	03/02/2016 11:15
Diethyl Phthalate	ND		0.14	0.25	1	03/02/2016 11:15
2,4-Dimethylphenol	ND		0.13	0.25	1	03/02/2016 11:15
Dimethyl Phthalate	ND		0.14	0.25	1	03/02/2016 11:15
4,6-Dinitro-2-methylphenol	ND		0.13	1.3	1	03/02/2016 11:15

(Cont.)

McCampbell Analytical, Inc.
"When Quality Counts"

1534 Willow Pass Road, Pittsburg, CA 94565-1701
Toll Free Telephone: (877) 252-9262 / Fax: (925) 252-9269
http://www.mccampbell.com / E-mail: main@mccampbell.com

Analytical Report

Client:	AEW Engineering, Inc.	**WorkOrder:**	1602A52
Date Received:	2/25/16 16:16	**Extraction Method:**	SW3550B/3640A
Date Prepared:	2/26/16	**Analytical Method:**	SW8270C
Project:	2015-29; Sausalito Gate 5 Characterization	**Unit:**	mg/Kg

Semi-Volatile Organics by GC/MS (Basic Target List) w/ GPC Clean Up

Client ID	Lab ID	Matrix	Date Collected	Instrument	Batch ID
COMP AEW-B1,B2 2.5-5'	**1602A52-001A**	**Soil**	**02/24/2016**	**GC21**	**117265**

Analytes	Result	Qualifiers	MDL	RL	DF	Date Analyzed
2,4-Dinitrophenol	ND		1.3	6.3	1	03/02/2016 11:15
2,4-Dinitrotoluene	ND		0.13	0.25	1	03/02/2016 11:15
2,6-Dinitrotoluene	ND		0.14	0.25	1	03/02/2016 11:15
Di-n-octyl Phthalate	**0.21**	J	0.14	0.50	1	03/02/2016 11:15
1,2-Diphenylhydrazine	ND		0.16	0.25	1	03/02/2016 11:15
Fluoranthene	ND		0.13	0.25	1	03/02/2016 11:15
Fluorene	ND		0.14	0.25	1	03/02/2016 11:15
Hexachlorobenzene	ND		0.17	0.25	1	03/02/2016 11:15
Hexachlorobutadiene	ND		0.15	0.25	1	03/02/2016 11:15
Hexachlorocyclopentadiene	ND		0.73	1.3	1	03/02/2016 11:15
Hexachloroethane	ND		0.14	0.25	1	03/02/2016 11:15
Indeno (1,2,3-cd) pyrene	ND		0.14	0.25	1	03/02/2016 11:15
Isophorone	ND		0.12	0.25	1	03/02/2016 11:15
2-Methylnaphthalene	ND		0.14	0.25	1	03/02/2016 11:15
2-Methylphenol (o-Cresol)	ND		0.14	0.25	1	03/02/2016 11:15
3 & 4-Methylphenol (m,p-Cresol)	ND		0.12	0.25	1	03/02/2016 11:15
Naphthalene	ND		0.13	0.25	1	03/02/2016 11:15
2-Nitroaniline	ND		0.62	1.3	1	03/02/2016 11:15
3-Nitroaniline	ND		0.59	1.3	1	03/02/2016 11:15
4-Nitroaniline	ND		0.55	1.3	1	03/02/2016 11:15
Nitrobenzene	ND		0.14	1.3	1	03/02/2016 11:15
2-Nitrophenol	ND		0.64	1.3	1	03/02/2016 11:15
4-Nitrophenol	ND		0.41	1.3	1	03/02/2016 11:15
N-Nitrosodiphenylamine	ND		0.16	0.25	1	03/02/2016 11:15
N-Nitrosodi-n-propylamine	ND		0.13	0.25	1	03/02/2016 11:15
Pentachlorophenol	ND		0.061	1.3	1	03/02/2016 11:15
Phenanthrene	ND		0.14	0.25	1	03/02/2016 11:15
Phenol	ND		0.12	0.25	1	03/02/2016 11:15
Pyrene	ND		0.13	0.25	1	03/02/2016 11:15
1,2,4-Trichlorobenzene	ND		0.14	0.25	1	03/02/2016 11:15
2,4,5-Trichlorophenol	ND		0.12	0.25	1	03/02/2016 11:15
2,4,6-Trichlorophenol	ND		0.14	0.25	1	03/02/2016 11:15

(Cont.)

McCampbell Analytical, Inc.
"When Quality Counts"

1534 Willow Pass Road, Pittsburg, CA 94565-1701
Toll Free Telephone: (877) 252-9262 / Fax: (925) 252-9269
http://www.mccampbell.com / E-mail: main@mccampbell.com

Analytical Report

Client:	AEW Engineering, Inc.	**WorkOrder:**	1602A52
Date Received:	2/25/16 16:16	**Extraction Method:**	SW3550B/3640A
Date Prepared:	2/26/16	**Analytical Method:**	SW8270C
Project:	2015-29; Sausalito Gate 5 Characterization	**Unit:**	mg/Kg

Semi-Volatile Organics by GC/MS (Basic Target List) w/ GPC Clean Up

Client ID	Lab ID	Matrix	Date Collected	Instrument	Batch ID
COMP AEW-B1,B2 2.5-5'	**1602A52-001A**	**Soil**	**02/24/2016**	**GC21**	**117265**

Analytes	Result	Qualifiers	MDL	RL	DF	Date Analyzed
Surrogates	REC (%)			Limits		
2-Fluorophenol	88			30-130		03/02/2016 11:15
Phenol-d5	88			30-130		03/02/2016 11:15
Nitrobenzene-d5	75			30-130		03/02/2016 11:15
2-Fluorobiphenyl	75			30-130		03/02/2016 11:15
2,4,6-Tribromophenol	45			10-130		03/02/2016 11:15
4-Terphenyl-d14	73			30-130		03/02/2016 11:15

Analyst(s): REB

(Cont.)

McCampbell Analytical, Inc.
"When Quality Counts"

1534 Willow Pass Road, Pittsburg, CA 94565-1701
Toll Free Telephone: (877) 252-9262 / Fax: (925) 252-9269
http://www.mccampbell.com / E-mail: main@mccampbell.com

Analytical Report

Client:	AEW Engineering, Inc.	**WorkOrder:**	1602A52
Date Received:	2/25/16 16:16	**Extraction Method:**	SW3550B/3640A
Date Prepared:	2/26/16	**Analytical Method:**	SW8270C
Project:	2015-29; Sausalito Gate 5 Characterization	**Unit:**	mg/Kg

Semi-Volatile Organics by GC/MS (Basic Target List) w/ GPC Clean Up

Client ID	Lab ID	Matrix	Date Collected	Instrument	Batch ID
COMP AEW-B1,B2 10-15'	**1602A52-002A**	**Soil**	**02/24/2016**	**GC21**	**117265**

Analytes	Result	Qualifiers	MDL	RL	DF	Date Analyzed
Acenaphthene	ND		0.28	0.50	2	03/02/2016 11:43
Acenaphthylene	ND		0.28	0.50	2	03/02/2016 11:43
Acetochlor	ND		0.50	0.50	2	03/02/2016 11:43
Anthracene	ND		0.28	0.50	2	03/02/2016 11:43
Benzidine	ND		0.46	2.6	2	03/02/2016 11:43
Benzo (a) anthracene	ND		0.28	0.50	2	03/02/2016 11:43
Benzo (b) fluoranthene	ND		0.28	0.50	2	03/02/2016 11:43
Benzo (k) fluoranthene	ND		0.32	0.50	2	03/02/2016 11:43
Benzo (g,h,i) perylene	ND		0.30	0.50	2	03/02/2016 11:43
Benzo (a) pyrene	ND		0.28	0.50	2	03/02/2016 11:43
Benzyl Alcohol	ND		1.0	2.6	2	03/02/2016 11:43
1,1-Biphenyl	ND		0.30	0.50	2	03/02/2016 11:43
Bis (2-chloroethoxy) Methane	ND		0.28	0.50	2	03/02/2016 11:43
Bis (2-chloroethyl) Ether	ND		0.26	0.50	2	03/02/2016 11:43
Bis (2-chloroisopropyl) Ether	ND		0.24	0.50	2	03/02/2016 11:43
Bis (2-ethylhexyl) Adipate	ND		0.50	0.50	2	03/02/2016 11:43
Bis (2-ethylhexyl) Phthalate	**0.30**	J	0.26	0.50	2	03/02/2016 11:43
4-Bromophenyl Phenyl Ether	ND		0.32	0.50	2	03/02/2016 11:43
Butylbenzyl Phthalate	**0.29**	J	0.26	0.50	2	03/02/2016 11:43
4-Chloroaniline	ND		0.26	0.50	2	03/02/2016 11:43
4-Chloro-3-methylphenol	ND		0.24	0.50	2	03/02/2016 11:43
2-Chloronaphthalene	ND		0.32	0.50	2	03/02/2016 11:43
2-Chlorophenol	ND		0.28	0.50	2	03/02/2016 11:43
4-Chlorophenyl Phenyl Ether	ND		0.30	0.50	2	03/02/2016 11:43
Chrysene	ND		0.28	0.50	2	03/02/2016 11:43
Dibenzo (a,h) anthracene	ND		0.32	0.50	2	03/02/2016 11:43
Dibenzofuran	ND		0.26	0.50	2	03/02/2016 11:43
Di-n-butyl Phthalate	ND		0.26	0.50	2	03/02/2016 11:43
1,2-Dichlorobenzene	ND		0.24	0.50	2	03/02/2016 11:43
1,3-Dichlorobenzene	ND		0.28	0.50	2	03/02/2016 11:43
1,4-Dichlorobenzene	ND		0.26	0.50	2	03/02/2016 11:43
3,3-Dichlorobenzidine	**0.28**	J	0.24	1.0	2	03/02/2016 11:43
2,4-Dichlorophenol	ND		0.26	0.50	2	03/02/2016 11:43
Diethyl Phthalate	ND		0.28	0.50	2	03/02/2016 11:43
2,4-Dimethylphenol	ND		0.26	0.50	2	03/02/2016 11:43
Dimethyl Phthalate	ND		0.28	0.50	2	03/02/2016 11:43
4,6-Dinitro-2-methylphenol	ND		0.26	2.6	2	03/02/2016 11:43

(Cont.)

McCampbell Analytical, Inc.
"When Quality Counts"

1534 Willow Pass Road, Pittsburg, CA 94565-1701
Toll Free Telephone: (877) 252-9262 / Fax: (925) 252-9269
http://www.mccampbell.com / E-mail: main@mccampbell.com

Analytical Report

Client:	AEW Engineering, Inc.	**WorkOrder:**	1602A52
Date Received:	2/25/16 16:16	**Extraction Method:**	SW3550B/3640A
Date Prepared:	2/26/16	**Analytical Method:**	SW8270C
Project:	2015-29; Sausalito Gate 5 Characterization	**Unit:**	mg/Kg

Semi-Volatile Organics by GC/MS (Basic Target List) w/ GPC Clean Up

Client ID	Lab ID	Matrix	Date Collected	Instrument	Batch ID
COMP AEW-B1,B2 10-15'	**1602A52-002A**	**Soil**	**02/24/2016**	**GC21**	**117265**

Analytes	Result	Qualifiers	MDL	RL	DF	Date Analyzed
2,4-Dinitrophenol	ND		2.6	13	2	03/02/2016 11:43
2,4-Dinitrotoluene	ND		0.26	0.50	2	03/02/2016 11:43
2,6-Dinitrotoluene	ND		0.28	0.50	2	03/02/2016 11:43
Di-n-octyl Phthalate	**0.43**	J	0.28	1.0	2	03/02/2016 11:43
1,2-Diphenylhydrazine	ND		0.32	0.50	2	03/02/2016 11:43
Fluoranthene	ND		0.26	0.50	2	03/02/2016 11:43
Fluorene	ND		0.28	0.50	2	03/02/2016 11:43
Hexachlorobenzene	ND		0.34	0.50	2	03/02/2016 11:43
Hexachlorobutadiene	ND		0.30	0.50	2	03/02/2016 11:43
Hexachlorocyclopentadiene	ND		1.5	2.6	2	03/02/2016 11:43
Hexachloroethane	ND		0.28	0.50	2	03/02/2016 11:43
Indeno (1,2,3-cd) pyrene	ND		0.28	0.50	2	03/02/2016 11:43
Isophorone	ND		0.24	0.50	2	03/02/2016 11:43
2-Methylnaphthalene	ND		0.28	0.50	2	03/02/2016 11:43
2-Methylphenol (o-Cresol)	ND		0.28	0.50	2	03/02/2016 11:43
3 & 4-Methylphenol (m,p-Cresol)	ND		0.24	0.50	2	03/02/2016 11:43
Naphthalene	ND		0.26	0.50	2	03/02/2016 11:43
2-Nitroaniline	ND		1.2	2.6	2	03/02/2016 11:43
3-Nitroaniline	ND		1.2	2.6	2	03/02/2016 11:43
4-Nitroaniline	ND		1.1	2.6	2	03/02/2016 11:43
Nitrobenzene	ND		0.28	2.6	2	03/02/2016 11:43
2-Nitrophenol	ND		1.3	2.6	2	03/02/2016 11:43
4-Nitrophenol	ND		0.82	2.6	2	03/02/2016 11:43
N-Nitrosodiphenylamine	ND		0.32	0.50	2	03/02/2016 11:43
N-Nitrosodi-n-propylamine	ND		0.26	0.50	2	03/02/2016 11:43
Pentachlorophenol	ND		0.12	2.6	2	03/02/2016 11:43
Phenanthrene	ND		0.28	0.50	2	03/02/2016 11:43
Phenol	ND		0.24	0.50	2	03/02/2016 11:43
Pyrene	ND		0.26	0.50	2	03/02/2016 11:43
1,2,4-Trichlorobenzene	ND		0.28	0.50	2	03/02/2016 11:43
2,4,5-Trichlorophenol	ND		0.24	0.50	2	03/02/2016 11:43
2,4,6-Trichlorophenol	ND		0.28	0.50	2	03/02/2016 11:43

(Cont.)

McCampbell Analytical, Inc.
"When Quality Counts"

1534 Willow Pass Road, Pittsburg, CA 94565-1701
Toll Free Telephone: (877) 252-9262 / Fax: (925) 252-9269
http://www.mccampbell.com / E-mail: main@mccampbell.com

Analytical Report

Client:	AEW Engineering, Inc.	**WorkOrder:**	1602A52
Date Received:	2/25/16 16:16	**Extraction Method:**	SW3550B/3640A
Date Prepared:	2/26/16	**Analytical Method:**	SW8270C
Project:	2015-29; Sausalito Gate 5 Characterization	**Unit:**	mg/Kg

Semi-Volatile Organics by GC/MS (Basic Target List) w/ GPC Clean Up

Client ID	Lab ID	Matrix	Date Collected	Instrument	Batch ID
COMP AEW-B1,B2 10-15'	**1602A52-002A**	**Soil**	**02/24/2016**	**GC21**	**117265**

Analytes	Result	Qualifiers	MDL	RL	DF	Date Analyzed
Surrogates	**REC (%)**			**Limits**		
2-Fluorophenol	68			30-130		03/02/2016 11:43
Phenol-d5	69			30-130		03/02/2016 11:43
Nitrobenzene-d5	56			30-130		03/02/2016 11:43
2-Fluorobiphenyl	57			30-130		03/02/2016 11:43
2,4,6-Tribromophenol	44			10-130		03/02/2016 11:43
4-Terphenyl-d14	64			30-130		03/02/2016 11:43

Analyst(s): REB

Analytical Comments: a3

(Cont.)

McCampbell Analytical, Inc.
"When Quality Counts"

1534 Willow Pass Road, Pittsburg, CA 94565-1701
Toll Free Telephone: (877) 252-9262 / Fax: (925) 252-9269
http://www.mccampbell.com / E-mail: main@mccampbell.com

Analytical Report

Client:	AEW Engineering, Inc.	**WorkOrder:**	1602A52
Date Received:	2/25/16 16:16	**Extraction Method:**	SW3550B/3640A
Date Prepared:	2/26/16	**Analytical Method:**	SW8270C
Project:	2015-29; Sausalito Gate 5 Characterization	**Unit:**	mg/Kg

Semi-Volatile Organics by GC/MS (Basic Target List) w/ GPC Clean Up

Client ID	Lab ID	Matrix	Date Collected	Instrument	Batch ID
COMP AEW-B3,B4 2.5-5'	**1602A52-003A**	**Soil**	**02/23/2016**	**GC21**	**117265**

Analytes	Result	Qualifiers	MDL	RL	DF	Date Analyzed
Acenaphthene	ND		2.8	5.0	20	03/02/2016 12:11
Acenaphthylene	ND		2.8	5.0	20	03/02/2016 12:11
Acetochlor	ND		5.0	5.0	20	03/02/2016 12:11
Anthracene	ND		2.8	5.0	20	03/02/2016 12:11
Benzidine	ND		4.6	26	20	03/02/2016 12:11
Benzo (a) anthracene	ND		2.8	5.0	20	03/02/2016 12:11
Benzo (b) fluoranthene	ND		2.8	5.0	20	03/02/2016 12:11
Benzo (k) fluoranthene	ND		3.2	5.0	20	03/02/2016 12:11
Benzo (g,h,i) perylene	ND		3.0	5.0	20	03/02/2016 12:11
Benzo (a) pyrene	ND		2.8	5.0	20	03/02/2016 12:11
Benzyl Alcohol	ND		10	26	20	03/02/2016 12:11
1,1-Biphenyl	ND		3.0	5.0	20	03/02/2016 12:11
Bis (2-chloroethoxy) Methane	ND		2.8	5.0	20	03/02/2016 12:11
Bis (2-chloroethyl) Ether	ND		2.6	5.0	20	03/02/2016 12:11
Bis (2-chloroisopropyl) Ether	ND		2.4	5.0	20	03/02/2016 12:11
Bis (2-ethylhexyl) Adipate	ND		5.0	5.0	20	03/02/2016 12:11
Bis (2-ethylhexyl) Phthalate	ND		2.6	5.0	20	03/02/2016 12:11
4-Bromophenyl Phenyl Ether	ND		3.2	5.0	20	03/02/2016 12:11
Butylbenzyl Phthalate	**2.7**	J	2.6	5.0	20	03/02/2016 12:11
4-Chloroaniline	ND		2.6	5.0	20	03/02/2016 12:11
4-Chloro-3-methylphenol	ND		2.4	5.0	20	03/02/2016 12:11
2-Chloronaphthalene	ND		3.2	5.0	20	03/02/2016 12:11
2-Chlorophenol	ND		2.8	5.0	20	03/02/2016 12:11
4-Chlorophenyl Phenyl Ether	ND		3.0	5.0	20	03/02/2016 12:11
Chrysene	ND		2.8	5.0	20	03/02/2016 12:11
Dibenzo (a,h) anthracene	ND		3.2	5.0	20	03/02/2016 12:11
Dibenzofuran	ND		2.6	5.0	20	03/02/2016 12:11
Di-n-butyl Phthalate	ND		2.6	5.0	20	03/02/2016 12:11
1,2-Dichlorobenzene	ND		2.4	5.0	20	03/02/2016 12:11
1,3-Dichlorobenzene	ND		2.8	5.0	20	03/02/2016 12:11
1,4-Dichlorobenzene	ND		2.6	5.0	20	03/02/2016 12:11
3,3-Dichlorobenzidine	**2.8**	J	2.4	10	20	03/02/2016 12:11
2,4-Dichlorophenol	ND		2.6	5.0	20	03/02/2016 12:11
Diethyl Phthalate	ND		2.8	5.0	20	03/02/2016 12:11
2,4-Dimethylphenol	ND		2.6	5.0	20	03/02/2016 12:11
Dimethyl Phthalate	ND		2.8	5.0	20	03/02/2016 12:11
4,6-Dinitro-2-methylphenol	ND		2.6	26	20	03/02/2016 12:11

(Cont.)

McCampbell Analytical, Inc.
"When Quality Counts"

1534 Willow Pass Road, Pittsburg, CA 94565-1701
Toll Free Telephone: (877) 252-9262 / Fax: (925) 252-9269
http://www.mccampbell.com / E-mail: main@mccampbell.com

Analytical Report

Client:	AEW Engineering, Inc.	**WorkOrder:**	1602A52
Date Received:	2/25/16 16:16	**Extraction Method:**	SW3550B/3640A
Date Prepared:	2/26/16	**Analytical Method:**	SW8270C
Project:	2015-29; Sausalito Gate 5 Characterization	**Unit:**	mg/Kg

Semi-Volatile Organics by GC/MS (Basic Target List) w/ GPC Clean Up

Client ID	Lab ID	Matrix	Date Collected	Instrument	Batch ID
COMP AEW-B3,B4 2.5-5'	**1602A52-003A**	**Soil**	**02/23/2016**	**GC21**	**117265**

Analytes	Result	Qualifiers	MDL	RL	DF	Date Analyzed
2,4-Dinitrophenol	ND		26	130	20	03/02/2016 12:11
2,4-Dinitrotoluene	ND		2.6	5.0	20	03/02/2016 12:11
2,6-Dinitrotoluene	ND		2.8	5.0	20	03/02/2016 12:11
Di-n-octyl Phthalate	**4.1**	J	2.8	10	20	03/02/2016 12:11
1,2-Diphenylhydrazine	ND		3.2	5.0	20	03/02/2016 12:11
Fluoranthene	ND		2.6	5.0	20	03/02/2016 12:11
Fluorene	ND		2.8	5.0	20	03/02/2016 12:11
Hexachlorobenzene	ND		3.4	5.0	20	03/02/2016 12:11
Hexachlorobutadiene	ND		3.0	5.0	20	03/02/2016 12:11
Hexachlorocyclopentadiene	ND		15	26	20	03/02/2016 12:11
Hexachloroethane	ND		2.8	5.0	20	03/02/2016 12:11
Indeno (1,2,3-cd) pyrene	ND		2.8	5.0	20	03/02/2016 12:11
Isophorone	ND		2.4	5.0	20	03/02/2016 12:11
2-Methylnaphthalene	ND		2.8	5.0	20	03/02/2016 12:11
2-Methylphenol (o-Cresol)	ND		2.8	5.0	20	03/02/2016 12:11
3 & 4-Methylphenol (m,p-Cresol)	ND		2.4	5.0	20	03/02/2016 12:11
Naphthalene	ND		2.6	5.0	20	03/02/2016 12:11
2-Nitroaniline	ND		12	26	20	03/02/2016 12:11
3-Nitroaniline	ND		12	26	20	03/02/2016 12:11
4-Nitroaniline	ND		11	26	20	03/02/2016 12:11
Nitrobenzene	ND		2.8	26	20	03/02/2016 12:11
2-Nitrophenol	ND		13	26	20	03/02/2016 12:11
4-Nitrophenol	ND		8.2	26	20	03/02/2016 12:11
N-Nitrosodiphenylamine	ND		3.2	5.0	20	03/02/2016 12:11
N-Nitrosodi-n-propylamine	ND		2.6	5.0	20	03/02/2016 12:11
Pentachlorophenol	ND		1.2	26	20	03/02/2016 12:11
Phenanthrene	ND		2.8	5.0	20	03/02/2016 12:11
Phenol	ND		2.4	5.0	20	03/02/2016 12:11
Pyrene	ND		2.6	5.0	20	03/02/2016 12:11
1,2,4-Trichlorobenzene	ND		2.8	5.0	20	03/02/2016 12:11
2,4,5-Trichlorophenol	ND		2.4	5.0	20	03/02/2016 12:11
2,4,6-Trichlorophenol	ND		2.8	5.0	20	03/02/2016 12:11

(Cont.)

McCampbell Analytical, Inc.
"When Quality Counts"

1534 Willow Pass Road, Pittsburg, CA 94565-1701
Toll Free Telephone: (877) 252-9262 / Fax: (925) 252-9269
http://www.mccampbell.com / E-mail: main@mccampbell.com

Analytical Report

Client:	AEW Engineering, Inc.	**WorkOrder:**	1602A52
Date Received:	2/25/16 16:16	**Extraction Method:**	SW3550B/3640A
Date Prepared:	2/26/16	**Analytical Method:**	SW8270C
Project:	2015-29; Sausalito Gate 5 Characterization	**Unit:**	mg/Kg

Semi-Volatile Organics by GC/MS (Basic Target List) w/ GPC Clean Up

Client ID	Lab ID	Matrix	Date Collected	Instrument	Batch ID
COMP AEW-B3,B4 2.5-5'	**1602A52-003A**	**Soil**	**02/23/2016**	**GC21**	**117265**

Analytes	Result	Qualifiers	MDL	RL	DF	Date Analyzed
Surrogates	**REC (%)**			**Limits**		
2-Fluorophenol	95			30-130		03/02/2016 12:11
Phenol-d5	85			30-130		03/02/2016 12:11
Nitrobenzene-d5	75			30-130		03/02/2016 12:11
2-Fluorobiphenyl	83			30-130		03/02/2016 12:11
2,4,6-Tribromophenol	48			10-130		03/02/2016 12:11
4-Terphenyl-d14	73			30-130		03/02/2016 12:11

Analyst(s): REB

Analytical Comments: a3

(Cont.)

McCampbell Analytical, Inc.
"When Quality Counts"

1534 Willow Pass Road, Pittsburg, CA 94565-1701
Toll Free Telephone: (877) 252-9262 / Fax: (925) 252-9269
http://www.mccampbell.com / E-mail: main@mccampbell.com

Analytical Report

Client:	AEW Engineering, Inc.	**WorkOrder:**	1602A52
Date Received:	2/25/16 16:16	**Extraction Method:**	SW3550B/3640A
Date Prepared:	2/26/16	**Analytical Method:**	SW8270C
Project:	2015-29; Sausalito Gate 5 Characterization	**Unit:**	mg/Kg

Semi-Volatile Organics by GC/MS (Basic Target List) w/ GPC Clean Up

Client ID	Lab ID	Matrix	Date Collected	Instrument	Batch ID
COMP AEW-B3,4 10-15'	**1602A52-004A**	**Soil**	**02/23/2016**	**GC17**	**117265**

Analytes	Result	MDL	RL	DF	Date Analyzed
Acenaphthene	ND	0.14	0.25	1	03/01/2016 10:52
Acenaphthylene	ND	0.14	0.25	1	03/01/2016 10:52
Acetochlor	ND	0.25	0.25	1	03/01/2016 10:52
Anthracene	ND	0.14	0.25	1	03/01/2016 10:52
Benzidine	ND	0.23	1.3	1	03/01/2016 10:52
Benzo (a) anthracene	ND	0.14	0.25	1	03/01/2016 10:52
Benzo (b) fluoranthene	ND	0.14	0.25	1	03/01/2016 10:52
Benzo (k) fluoranthene	ND	0.16	0.25	1	03/01/2016 10:52
Benzo (g,h,i) perylene	ND	0.15	0.25	1	03/01/2016 10:52
Benzo (a) pyrene	ND	0.14	0.25	1	03/01/2016 10:52
Benzyl Alcohol	ND	0.51	1.3	1	03/01/2016 10:52
1,1-Biphenyl	ND	0.15	0.25	1	03/01/2016 10:52
Bis (2-chloroethoxy) Methane	ND	0.14	0.25	1	03/01/2016 10:52
Bis (2-chloroethyl) Ether	ND	0.13	0.25	1	03/01/2016 10:52
Bis (2-chloroisopropyl) Ether	ND	0.12	0.25	1	03/01/2016 10:52
Bis (2-ethylhexyl) Adipate	ND	0.25	0.25	1	03/01/2016 10:52
Bis (2-ethylhexyl) Phthalate	ND	0.13	0.25	1	03/01/2016 10:52
4-Bromophenyl Phenyl Ether	ND	0.16	0.25	1	03/01/2016 10:52
Butylbenzyl Phthalate	ND	0.13	0.25	1	03/01/2016 10:52
4-Chloroaniline	ND	0.13	0.25	1	03/01/2016 10:52
4-Chloro-3-methylphenol	ND	0.12	0.25	1	03/01/2016 10:52
2-Chloronaphthalene	ND	0.16	0.25	1	03/01/2016 10:52
2-Chlorophenol	ND	0.14	0.25	1	03/01/2016 10:52
4-Chlorophenyl Phenyl Ether	ND	0.15	0.25	1	03/01/2016 10:52
Chrysene	ND	0.14	0.25	1	03/01/2016 10:52
Dibenzo (a,h) anthracene	ND	0.16	0.25	1	03/01/2016 10:52
Dibenzofuran	ND	0.13	0.25	1	03/01/2016 10:52
Di-n-butyl Phthalate	ND	0.13	0.25	1	03/01/2016 10:52
1,2-Dichlorobenzene	ND	0.12	0.25	1	03/01/2016 10:52
1,3-Dichlorobenzene	ND	0.14	0.25	1	03/01/2016 10:52
1,4-Dichlorobenzene	ND	0.13	0.25	1	03/01/2016 10:52
3,3-Dichlorobenzidine	ND	0.12	0.50	1	03/01/2016 10:52
2,4-Dichlorophenol	ND	0.13	0.25	1	03/01/2016 10:52
Diethyl Phthalate	ND	0.14	0.25	1	03/01/2016 10:52
2,4-Dimethylphenol	ND	0.13	0.25	1	03/01/2016 10:52
Dimethyl Phthalate	ND	0.14	0.25	1	03/01/2016 10:52
4,6-Dinitro-2-methylphenol	ND	0.13	1.3	1	03/01/2016 10:52

(Cont.)

McCampbell Analytical, Inc.
"When Quality Counts"

1534 Willow Pass Road, Pittsburg, CA 94565-1701
Toll Free Telephone: (877) 252-9262 / Fax: (925) 252-9269
http://www.mccampbell.com / E-mail: main@mccampbell.com

Analytical Report

Client:	AEW Engineering, Inc.	**WorkOrder:**	1602A52
Date Received:	2/25/16 16:16	**Extraction Method:**	SW3550B/3640A
Date Prepared:	2/26/16	**Analytical Method:**	SW8270C
Project:	2015-29; Sausalito Gate 5 Characterization	**Unit:**	mg/Kg

Semi-Volatile Organics by GC/MS (Basic Target List) w/ GPC Clean Up

Client ID	Lab ID	Matrix	Date Collected	Instrument	Batch ID
COMP AEW-B3,4 10-15'	**1602A52-004A**	**Soil**	**02/23/2016**	**GC17**	**117265**

Analytes	Result	MDL	RL	DF	Date Analyzed
2,4-Dinitrophenol	ND	1.3	6.3	1	03/01/2016 10:52
2,4-Dinitrotoluene	ND	0.13	0.25	1	03/01/2016 10:52
2,6-Dinitrotoluene	ND	0.14	0.25	1	03/01/2016 10:52
Di-n-octyl Phthalate	ND	0.14	0.50	1	03/01/2016 10:52
1,2-Diphenylhydrazine	ND	0.16	0.25	1	03/01/2016 10:52
Fluoranthene	ND	0.13	0.25	1	03/01/2016 10:52
Fluorene	ND	0.14	0.25	1	03/01/2016 10:52
Hexachlorobenzene	ND	0.17	0.25	1	03/01/2016 10:52
Hexachlorobutadiene	ND	0.15	0.25	1	03/01/2016 10:52
Hexachlorocyclopentadiene	ND	0.73	1.3	1	03/01/2016 10:52
Hexachloroethane	ND	0.14	0.25	1	03/01/2016 10:52
Indeno (1,2,3-cd) pyrene	ND	0.14	0.25	1	03/01/2016 10:52
Isophorone	ND	0.12	0.25	1	03/01/2016 10:52
2-Methylnaphthalene	ND	0.14	0.25	1	03/01/2016 10:52
2-Methylphenol (o-Cresol)	ND	0.14	0.25	1	03/01/2016 10:52
3 & 4-Methylphenol (m,p-Cresol)	ND	0.12	0.25	1	03/01/2016 10:52
Naphthalene	ND	0.13	0.25	1	03/01/2016 10:52
2-Nitroaniline	ND	0.62	1.3	1	03/01/2016 10:52
3-Nitroaniline	ND	0.59	1.3	1	03/01/2016 10:52
4-Nitroaniline	ND	0.55	1.3	1	03/01/2016 10:52
Nitrobenzene	ND	0.14	1.3	1	03/01/2016 10:52
2-Nitrophenol	ND	0.64	1.3	1	03/01/2016 10:52
4-Nitrophenol	ND	0.41	1.3	1	03/01/2016 10:52
N-Nitrosodiphenylamine	ND	0.16	0.25	1	03/01/2016 10:52
N-Nitrosodi-n-propylamine	ND	0.13	0.25	1	03/01/2016 10:52
Pentachlorophenol	ND	0.061	1.3	1	03/01/2016 10:52
Phenanthrene	ND	0.14	0.25	1	03/01/2016 10:52
Phenol	ND	0.12	0.25	1	03/01/2016 10:52
Pyrene	ND	0.13	0.25	1	03/01/2016 10:52
1,2,4-Trichlorobenzene	ND	0.14	0.25	1	03/01/2016 10:52
2,4,5-Trichlorophenol	ND	0.12	0.25	1	03/01/2016 10:52
2,4,6-Trichlorophenol	ND	0.14	0.25	1	03/01/2016 10:52

(Cont.)

McCampbell Analytical, Inc.
"When Quality Counts"

1534 Willow Pass Road, Pittsburg, CA 94565-1701
Toll Free Telephone: (877) 252-9262 / Fax: (925) 252-9269
http://www.mccampbell.com / E-mail: main@mccampbell.com

Analytical Report

Client:	AEW Engineering, Inc.	**WorkOrder:**	1602A52
Date Received:	2/25/16 16:16	**Extraction Method:**	SW3550B/3640A
Date Prepared:	2/26/16	**Analytical Method:**	SW8270C
Project:	2015-29; Sausalito Gate 5 Characterization	**Unit:**	mg/Kg

Semi-Volatile Organics by GC/MS (Basic Target List) w/ GPC Clean Up

Client ID	Lab ID	Matrix	Date Collected	Instrument	Batch ID
COMP AEW-B3,4 10-15'	**1602A52-004A**	**Soil**	**02/23/2016**	**GC17**	**117265**

Analytes	Result	MDL	RL	DF	Date Analyzed
Surrogates	**REC (%)**		**Limits**		
2-Fluorophenol	104		30-130		03/01/2016 10:52
Phenol-d5	96		30-130		03/01/2016 10:52
Nitrobenzene-d5	93		30-130		03/01/2016 10:52
2-Fluorobiphenyl	87		30-130		03/01/2016 10:52
2,4,6-Tribromophenol	49		10-130		03/01/2016 10:52
4-Terphenyl-d14	106		30-130		03/01/2016 10:52

Analyst(s): REB

(Cont.)

McCampbell Analytical, Inc.
"When Quality Counts"

1534 Willow Pass Road, Pittsburg, CA 94565-1701
Toll Free Telephone: (877) 252-9262 / Fax: (925) 252-9269
http://www.mccampbell.com / E-mail: main@mccampbell.com

Analytical Report

Client:	AEW Engineering, Inc.	**WorkOrder:**	1602A52
Date Received:	2/25/16 16:16	**Extraction Method:**	SW3550B/3640A
Date Prepared:	2/26/16	**Analytical Method:**	SW8270C
Project:	2015-29; Sausalito Gate 5 Characterization	**Unit:**	mg/Kg

Semi-Volatile Organics by GC/MS (Basic Target List) w/ GPC Clean Up

Client ID	Lab ID	Matrix	Date Collected	Instrument	Batch ID
COMP AEW-B5,B11 2.5-5'	**1602A52-005A**	**Soil**	**02/25/2016**	**GC21**	**117265**

Analytes	Result	Qualifiers	MDL	RL	DF	Date Analyzed
Acenaphthene	ND		1.4	2.5	10	03/02/2016 12:39
Acenaphthylene	ND		1.4	2.5	10	03/02/2016 12:39
Acetochlor	ND		2.5	2.5	10	03/02/2016 12:39
Anthracene	ND		1.4	2.5	10	03/02/2016 12:39
Benzidine	ND		2.3	13	10	03/02/2016 12:39
Benzo (a) anthracene	ND		1.4	2.5	10	03/02/2016 12:39
Benzo (b) fluoranthene	ND		1.4	2.5	10	03/02/2016 12:39
Benzo (k) fluoranthene	ND		1.6	2.5	10	03/02/2016 12:39
Benzo (g,h,i) perylene	ND		1.5	2.5	10	03/02/2016 12:39
Benzo (a) pyrene	ND		1.4	2.5	10	03/02/2016 12:39
Benzyl Alcohol	ND		5.1	13	10	03/02/2016 12:39
1,1-Biphenyl	ND		1.5	2.5	10	03/02/2016 12:39
Bis (2-chloroethoxy) Methane	ND		1.4	2.5	10	03/02/2016 12:39
Bis (2-chloroethyl) Ether	ND		1.3	2.5	10	03/02/2016 12:39
Bis (2-chloroisopropyl) Ether	ND		1.2	2.5	10	03/02/2016 12:39
Bis (2-ethylhexyl) Adipate	ND		2.5	2.5	10	03/02/2016 12:39
Bis (2-ethylhexyl) Phthalate	**1.7**	J	1.3	2.5	10	03/02/2016 12:39
4-Bromophenyl Phenyl Ether	ND		1.6	2.5	10	03/02/2016 12:39
Butylbenzyl Phthalate	**1.3**	J	1.3	2.5	10	03/02/2016 12:39
4-Chloroaniline	ND		1.3	2.5	10	03/02/2016 12:39
4-Chloro-3-methylphenol	ND		1.2	2.5	10	03/02/2016 12:39
2-Chloronaphthalene	ND		1.6	2.5	10	03/02/2016 12:39
2-Chlorophenol	ND		1.4	2.5	10	03/02/2016 12:39
4-Chlorophenyl Phenyl Ether	ND		1.5	2.5	10	03/02/2016 12:39
Chrysene	ND		1.4	2.5	10	03/02/2016 12:39
Dibenzo (a,h) anthracene	ND		1.6	2.5	10	03/02/2016 12:39
Dibenzofuran	ND		1.3	2.5	10	03/02/2016 12:39
Di-n-butyl Phthalate	ND		1.3	2.5	10	03/02/2016 12:39
1,2-Dichlorobenzene	ND		1.2	2.5	10	03/02/2016 12:39
1,3-Dichlorobenzene	ND		1.4	2.5	10	03/02/2016 12:39
1,4-Dichlorobenzene	ND		1.3	2.5	10	03/02/2016 12:39
3,3-Dichlorobenzidine	**1.4**	J	1.2	5.0	10	03/02/2016 12:39
2,4-Dichlorophenol	ND		1.3	2.5	10	03/02/2016 12:39
Diethyl Phthalate	ND		1.4	2.5	10	03/02/2016 12:39
2,4-Dimethylphenol	ND		1.3	2.5	10	03/02/2016 12:39
Dimethyl Phthalate	ND		1.4	2.5	10	03/02/2016 12:39
4,6-Dinitro-2-methylphenol	ND		1.3	13	10	03/02/2016 12:39

(Cont.)

McCampbell Analytical, Inc.
"When Quality Counts"

1534 Willow Pass Road, Pittsburg, CA 94565-1701
Toll Free Telephone: (877) 252-9262 / Fax: (925) 252-9269
http://www.mccampbell.com / E-mail: main@mccampbell.com

Analytical Report

Client:	AEW Engineering, Inc.	**WorkOrder:**	1602A52
Date Received:	2/25/16 16:16	**Extraction Method:**	SW3550B/3640A
Date Prepared:	2/26/16	**Analytical Method:**	SW8270C
Project:	2015-29; Sausalito Gate 5 Characterization	**Unit:**	mg/Kg

Semi-Volatile Organics by GC/MS (Basic Target List) w/ GPC Clean Up

Client ID	Lab ID	Matrix	Date Collected	Instrument	Batch ID
COMP AEW-B5,B11 2.5-5'	**1602A52-005A**	**Soil**	**02/25/2016**	**GC21**	**117265**

Analytes	Result	Qualifiers	MDL	RL	DF	Date Analyzed
2,4-Dinitrophenol	ND		13	63	10	03/02/2016 12:39
2,4-Dinitrotoluene	ND		1.3	2.5	10	03/02/2016 12:39
2,6-Dinitrotoluene	ND		1.4	2.5	10	03/02/2016 12:39
Di-n-octyl Phthalate	**2.1**	J	1.4	5.0	10	03/02/2016 12:39
1,2-Diphenylhydrazine	ND		1.6	2.5	10	03/02/2016 12:39
Fluoranthene	ND		1.3	2.5	10	03/02/2016 12:39
Fluorene	ND		1.4	2.5	10	03/02/2016 12:39
Hexachlorobenzene	ND		1.7	2.5	10	03/02/2016 12:39
Hexachlorobutadiene	ND		1.5	2.5	10	03/02/2016 12:39
Hexachlorocyclopentadiene	ND		7.3	13	10	03/02/2016 12:39
Hexachloroethane	ND		1.4	2.5	10	03/02/2016 12:39
Indeno (1,2,3-cd) pyrene	ND		1.4	2.5	10	03/02/2016 12:39
Isophorone	ND		1.2	2.5	10	03/02/2016 12:39
2-Methylnaphthalene	ND		1.4	2.5	10	03/02/2016 12:39
2-Methylphenol (o-Cresol)	ND		1.4	2.5	10	03/02/2016 12:39
3 & 4-Methylphenol (m,p-Cresol)	ND		1.2	2.5	10	03/02/2016 12:39
Naphthalene	ND		1.3	2.5	10	03/02/2016 12:39
2-Nitroaniline	ND		6.2	13	10	03/02/2016 12:39
3-Nitroaniline	ND		5.9	13	10	03/02/2016 12:39
4-Nitroaniline	ND		5.5	13	10	03/02/2016 12:39
Nitrobenzene	ND		1.4	13	10	03/02/2016 12:39
2-Nitrophenol	ND		6.4	13	10	03/02/2016 12:39
4-Nitrophenol	ND		4.1	13	10	03/02/2016 12:39
N-Nitrosodiphenylamine	ND		1.6	2.5	10	03/02/2016 12:39
N-Nitrosodi-n-propylamine	ND		1.3	2.5	10	03/02/2016 12:39
Pentachlorophenol	ND		0.61	13	10	03/02/2016 12:39
Phenanthrene	ND		1.4	2.5	10	03/02/2016 12:39
Phenol	ND		1.2	2.5	10	03/02/2016 12:39
Pyrene	ND		1.3	2.5	10	03/02/2016 12:39
1,2,4-Trichlorobenzene	ND		1.4	2.5	10	03/02/2016 12:39
2,4,5-Trichlorophenol	ND		1.2	2.5	10	03/02/2016 12:39
2,4,6-Trichlorophenol	ND		1.4	2.5	10	03/02/2016 12:39

(Cont.)

McCampbell Analytical, Inc.
"When Quality Counts"

1534 Willow Pass Road, Pittsburg, CA 94565-1701
Toll Free Telephone: (877) 252-9262 / Fax: (925) 252-9269
http://www.mccampbell.com / E-mail: main@mccampbell.com

Analytical Report

Client:	AEW Engineering, Inc.	**WorkOrder:**	1602A52
Date Received:	2/25/16 16:16	**Extraction Method:**	SW3550B/3640A
Date Prepared:	2/26/16	**Analytical Method:**	SW8270C
Project:	2015-29; Sausalito Gate 5 Characterization	**Unit:**	mg/Kg

Semi-Volatile Organics by GC/MS (Basic Target List) w/ GPC Clean Up

Client ID	Lab ID	Matrix	Date Collected	Instrument	Batch ID
COMP AEW-B5,B11 2.5-5'	**1602A52-005A**	**Soil**	**02/25/2016**	**GC21**	**117265**

Analytes	Result	Qualifiers	MDL	RL	DF	Date Analyzed
Surrogates	**REC (%)**			**Limits**		
2-Fluorophenol	107			30-130		03/02/2016 12:39
Phenol-d5	104			30-130		03/02/2016 12:39
Nitrobenzene-d5	80			30-130		03/02/2016 12:39
2-Fluorobiphenyl	87			30-130		03/02/2016 12:39
2,4,6-Tribromophenol	64			10-130		03/02/2016 12:39
4-Terphenyl-d14	81			30-130		03/02/2016 12:39

Analyst(s): REB

Analytical Comments: a3

(Cont.)

McCampbell Analytical, Inc.
"When Quality Counts"

1534 Willow Pass Road, Pittsburg, CA 94565-1701
Toll Free Telephone: (877) 252-9262 / Fax: (925) 252-9269
http://www.mccampbell.com / E-mail: main@mccampbell.com

Analytical Report

Client:	AEW Engineering, Inc.	**WorkOrder:**	1602A52
Date Received:	2/25/16 16:16	**Extraction Method:**	SW3550B/3640A
Date Prepared:	2/26/16	**Analytical Method:**	SW8270C
Project:	2015-29; Sausalito Gate 5 Characterization	**Unit:**	mg/Kg

Semi-Volatile Organics by GC/MS (Basic Target List) w/ GPC Clean Up

Client ID	Lab ID	Matrix	Date Collected	Instrument	Batch ID
COMP AEW-B5,B11 10-15'	**1602A52-006A**	**Soil**	**02/25/2016**	**GC17**	**117265**

Analytes	Result	MDL	RL	DF	Date Analyzed
Acenaphthene	ND	0.14	0.25	1	03/01/2016 11:20
Acenaphthylene	ND	0.14	0.25	1	03/01/2016 11:20
Acetochlor	ND	0.25	0.25	1	03/01/2016 11:20
Anthracene	ND	0.14	0.25	1	03/01/2016 11:20
Benzidine	ND	0.23	1.3	1	03/01/2016 11:20
Benzo (a) anthracene	ND	0.14	0.25	1	03/01/2016 11:20
Benzo (b) fluoranthene	ND	0.14	0.25	1	03/01/2016 11:20
Benzo (k) fluoranthene	ND	0.16	0.25	1	03/01/2016 11:20
Benzo (g,h,i) perylene	ND	0.15	0.25	1	03/01/2016 11:20
Benzo (a) pyrene	ND	0.14	0.25	1	03/01/2016 11:20
Benzyl Alcohol	ND	0.51	1.3	1	03/01/2016 11:20
1,1-Biphenyl	ND	0.15	0.25	1	03/01/2016 11:20
Bis (2-chloroethoxy) Methane	ND	0.14	0.25	1	03/01/2016 11:20
Bis (2-chloroethyl) Ether	ND	0.13	0.25	1	03/01/2016 11:20
Bis (2-chloroisopropyl) Ether	ND	0.12	0.25	1	03/01/2016 11:20
Bis (2-ethylhexyl) Adipate	ND	0.25	0.25	1	03/01/2016 11:20
Bis (2-ethylhexyl) Phthalate	ND	0.13	0.25	1	03/01/2016 11:20
4-Bromophenyl Phenyl Ether	ND	0.16	0.25	1	03/01/2016 11:20
Butylbenzyl Phthalate	ND	0.13	0.25	1	03/01/2016 11:20
4-Chloroaniline	ND	0.13	0.25	1	03/01/2016 11:20
4-Chloro-3-methylphenol	ND	0.12	0.25	1	03/01/2016 11:20
2-Chloronaphthalene	ND	0.16	0.25	1	03/01/2016 11:20
2-Chlorophenol	ND	0.14	0.25	1	03/01/2016 11:20
4-Chlorophenyl Phenyl Ether	ND	0.15	0.25	1	03/01/2016 11:20
Chrysene	ND	0.14	0.25	1	03/01/2016 11:20
Dibenzo (a,h) anthracene	ND	0.16	0.25	1	03/01/2016 11:20
Dibenzofuran	ND	0.13	0.25	1	03/01/2016 11:20
Di-n-butyl Phthalate	ND	0.13	0.25	1	03/01/2016 11:20
1,2-Dichlorobenzene	ND	0.12	0.25	1	03/01/2016 11:20
1,3-Dichlorobenzene	ND	0.14	0.25	1	03/01/2016 11:20
1,4-Dichlorobenzene	ND	0.13	0.25	1	03/01/2016 11:20
3,3-Dichlorobenzidine	ND	0.12	0.50	1	03/01/2016 11:20
2,4-Dichlorophenol	ND	0.13	0.25	1	03/01/2016 11:20
Diethyl Phthalate	ND	0.14	0.25	1	03/01/2016 11:20
2,4-Dimethylphenol	ND	0.13	0.25	1	03/01/2016 11:20
Dimethyl Phthalate	ND	0.14	0.25	1	03/01/2016 11:20
4,6-Dinitro-2-methylphenol	ND	0.13	1.3	1	03/01/2016 11:20

(Cont.)

McCampbell Analytical, Inc.
"When Quality Counts"

1534 Willow Pass Road, Pittsburg, CA 94565-1701
Toll Free Telephone: (877) 252-9262 / Fax: (925) 252-9269
http://www.mccampbell.com / E-mail: main@mccampbell.com

Analytical Report

Client:	AEW Engineering, Inc.	**WorkOrder:**	1602A52
Date Received:	2/25/16 16:16	**Extraction Method:**	SW3550B/3640A
Date Prepared:	2/26/16	**Analytical Method:**	SW8270C
Project:	2015-29; Sausalito Gate 5 Characterization	**Unit:**	mg/Kg

Semi-Volatile Organics by GC/MS (Basic Target List) w/ GPC Clean Up

Client ID	Lab ID	Matrix	Date Collected	Instrument	Batch ID
COMP AEW-B5,B11 10-15'	**1602A52-006A**	**Soil**	**02/25/2016**	**GC17**	**117265**

Analytes	Result	MDL	RL	DF	Date Analyzed
2,4-Dinitrophenol	ND	1.3	6.3	1	03/01/2016 11:20
2,4-Dinitrotoluene	ND	0.13	0.25	1	03/01/2016 11:20
2,6-Dinitrotoluene	ND	0.14	0.25	1	03/01/2016 11:20
Di-n-octyl Phthalate	ND	0.14	0.50	1	03/01/2016 11:20
1,2-Diphenylhydrazine	ND	0.16	0.25	1	03/01/2016 11:20
Fluoranthene	ND	0.13	0.25	1	03/01/2016 11:20
Fluorene	ND	0.14	0.25	1	03/01/2016 11:20
Hexachlorobenzene	ND	0.17	0.25	1	03/01/2016 11:20
Hexachlorobutadiene	ND	0.15	0.25	1	03/01/2016 11:20
Hexachlorocyclopentadiene	ND	0.73	1.3	1	03/01/2016 11:20
Hexachloroethane	ND	0.14	0.25	1	03/01/2016 11:20
Indeno (1,2,3-cd) pyrene	ND	0.14	0.25	1	03/01/2016 11:20
Isophorone	ND	0.12	0.25	1	03/01/2016 11:20
2-Methylnaphthalene	ND	0.14	0.25	1	03/01/2016 11:20
2-Methylphenol (o-Cresol)	ND	0.14	0.25	1	03/01/2016 11:20
3 & 4-Methylphenol (m,p-Cresol)	ND	0.12	0.25	1	03/01/2016 11:20
Naphthalene	ND	0.13	0.25	1	03/01/2016 11:20
2-Nitroaniline	ND	0.62	1.3	1	03/01/2016 11:20
3-Nitroaniline	ND	0.59	1.3	1	03/01/2016 11:20
4-Nitroaniline	ND	0.55	1.3	1	03/01/2016 11:20
Nitrobenzene	ND	0.14	1.3	1	03/01/2016 11:20
2-Nitrophenol	ND	0.64	1.3	1	03/01/2016 11:20
4-Nitrophenol	ND	0.41	1.3	1	03/01/2016 11:20
N-Nitrosodiphenylamine	ND	0.16	0.25	1	03/01/2016 11:20
N-Nitrosodi-n-propylamine	ND	0.13	0.25	1	03/01/2016 11:20
Pentachlorophenol	ND	0.061	1.3	1	03/01/2016 11:20
Phenanthrene	ND	0.14	0.25	1	03/01/2016 11:20
Phenol	ND	0.12	0.25	1	03/01/2016 11:20
Pyrene	ND	0.13	0.25	1	03/01/2016 11:20
1,2,4-Trichlorobenzene	ND	0.14	0.25	1	03/01/2016 11:20
2,4,5-Trichlorophenol	ND	0.12	0.25	1	03/01/2016 11:20
2,4,6-Trichlorophenol	ND	0.14	0.25	1	03/01/2016 11:20

(Cont.)

McCampbell Analytical, Inc.
"When Quality Counts"

1534 Willow Pass Road, Pittsburg, CA 94565-1701
Toll Free Telephone: (877) 252-9262 / Fax: (925) 252-9269
http://www.mccampbell.com / E-mail: main@mccampbell.com

Analytical Report

Client:	AEW Engineering, Inc.	**WorkOrder:**	1602A52
Date Received:	2/25/16 16:16	**Extraction Method:**	SW3550B/3640A
Date Prepared:	2/26/16	**Analytical Method:**	SW8270C
Project:	2015-29; Sausalito Gate 5 Characterization	**Unit:**	mg/Kg

Semi-Volatile Organics by GC/MS (Basic Target List) w/ GPC Clean Up

Client ID	Lab ID	Matrix	Date Collected	Instrument	Batch ID
COMP AEW-B5,B11 10-15'	**1602A52-006A**	**Soil**	**02/25/2016**	**GC17**	**117265**

Analytes	Result	MDL	RL	DF	Date Analyzed
Surrogates	REC (%)		Limits		
2-Fluorophenol	111		30-130		03/01/2016 11:20
Phenol-d5	102		30-130		03/01/2016 11:20
Nitrobenzene-d5	97		30-130		03/01/2016 11:20
2-Fluorobiphenyl	90		30-130		03/01/2016 11:20
2,4,6-Tribromophenol	44		10-130		03/01/2016 11:20
4-Terphenyl-d14	103		30-130		03/01/2016 11:20

Analyst(s): REB

(Cont.)

McCampbell Analytical, Inc.
"When Quality Counts"

1534 Willow Pass Road, Pittsburg, CA 94565-1701
Toll Free Telephone: (877) 252-9262 / Fax: (925) 252-9269
http://www.mccampbell.com / E-mail: main@mccampbell.com

Analytical Report

Client:	AEW Engineering, Inc.	**WorkOrder:**	1602A52
Date Received:	2/25/16 16:16	**Extraction Method:**	SW3550B/3640A
Date Prepared:	2/26/16	**Analytical Method:**	SW8270C
Project:	2015-29; Sausalito Gate 5 Characterization	**Unit:**	mg/Kg

Semi-Volatile Organics by GC/MS (Basic Target List) w/ GPC Clean Up

Client ID	Lab ID	Matrix	Date Collected	Instrument	Batch ID
COMP AEW-B6,B7 2.5-5'	**1602A52-007A**	**Soil**	**02/24/2016**	**GC21**	**117265**

Analytes	Result	Qualifiers	MDL	RL	DF	Date Analyzed
Acenaphthene	ND		0.70	1.2	5	03/02/2016 13:06
Acenaphthylene	ND		0.70	1.2	5	03/02/2016 13:06
Acetochlor	ND		1.2	1.2	5	03/02/2016 13:06
Anthracene	ND		0.70	1.2	5	03/02/2016 13:06
Benzidine	ND		1.2	6.5	5	03/02/2016 13:06
Benzo (a) anthracene	ND		0.70	1.2	5	03/02/2016 13:06
Benzo (b) fluoranthene	ND		0.70	1.2	5	03/02/2016 13:06
Benzo (k) fluoranthene	ND		0.80	1.2	5	03/02/2016 13:06
Benzo (g,h,i) perylene	ND		0.75	1.2	5	03/02/2016 13:06
Benzo (a) pyrene	ND		0.70	1.2	5	03/02/2016 13:06
Benzyl Alcohol	ND		2.6	6.5	5	03/02/2016 13:06
1,1-Biphenyl	ND		0.75	1.2	5	03/02/2016 13:06
Bis (2-chloroethoxy) Methane	ND		0.70	1.2	5	03/02/2016 13:06
Bis (2-chloroethyl) Ether	ND		0.65	1.2	5	03/02/2016 13:06
Bis (2-chloroisopropyl) Ether	ND		0.60	1.2	5	03/02/2016 13:06
Bis (2-ethylhexyl) Adipate	ND		1.2	1.2	5	03/02/2016 13:06
Bis (2-ethylhexyl) Phthalate	**0.71**	J	0.65	1.2	5	03/02/2016 13:06
4-Bromophenyl Phenyl Ether	ND		0.80	1.2	5	03/02/2016 13:06
Butylbenzyl Phthalate	**0.69**	J	0.65	1.2	5	03/02/2016 13:06
4-Chloroaniline	ND		0.65	1.2	5	03/02/2016 13:06
4-Chloro-3-methylphenol	ND		0.60	1.2	5	03/02/2016 13:06
2-Chloronaphthalene	ND		0.80	1.2	5	03/02/2016 13:06
2-Chlorophenol	ND		0.70	1.2	5	03/02/2016 13:06
4-Chlorophenyl Phenyl Ether	ND		0.75	1.2	5	03/02/2016 13:06
Chrysene	ND		0.70	1.2	5	03/02/2016 13:06
Dibenzo (a,h) anthracene	ND		0.80	1.2	5	03/02/2016 13:06
Dibenzofuran	ND		0.65	1.2	5	03/02/2016 13:06
Di-n-butyl Phthalate	ND		0.65	1.2	5	03/02/2016 13:06
1,2-Dichlorobenzene	ND		0.60	1.2	5	03/02/2016 13:06
1,3-Dichlorobenzene	ND		0.70	1.2	5	03/02/2016 13:06
1,4-Dichlorobenzene	ND		0.65	1.2	5	03/02/2016 13:06
3,3-Dichlorobenzidine	**0.70**	J	0.60	2.5	5	03/02/2016 13:06
2,4-Dichlorophenol	ND		0.65	1.2	5	03/02/2016 13:06
Diethyl Phthalate	ND		0.70	1.2	5	03/02/2016 13:06
2,4-Dimethylphenol	ND		0.65	1.2	5	03/02/2016 13:06
Dimethyl Phthalate	ND		0.70	1.2	5	03/02/2016 13:06
4,6-Dinitro-2-methylphenol	ND		0.65	6.5	5	03/02/2016 13:06

(Cont.)

McCampbell Analytical, Inc.
"When Quality Counts"

1534 Willow Pass Road, Pittsburg, CA 94565-1701
Toll Free Telephone: (877) 252-9262 / Fax: (925) 252-9269
http://www.mccampbell.com / E-mail: main@mccampbell.com

Analytical Report

Client:	AEW Engineering, Inc.	**WorkOrder:**	1602A52
Date Received:	2/25/16 16:16	**Extraction Method:**	SW3550B/3640A
Date Prepared:	2/26/16	**Analytical Method:**	SW8270C
Project:	2015-29; Sausalito Gate 5 Characterization	**Unit:**	mg/Kg

Semi-Volatile Organics by GC/MS (Basic Target List) w/ GPC Clean Up

Client ID	Lab ID	Matrix	Date Collected	Instrument	Batch ID
COMP AEW-B6,B7 2.5-5'	**1602A52-007A**	**Soil**	**02/24/2016**	**GC21**	**117265**

Analytes	Result	Qualifiers	MDL	RL	DF	Date Analyzed
2,4-Dinitrophenol	ND		6.5	32	5	03/02/2016 13:06
2,4-Dinitrotoluene	ND		0.65	1.2	5	03/02/2016 13:06
2,6-Dinitrotoluene	ND		0.70	1.2	5	03/02/2016 13:06
Di-n-octyl Phthalate	**1.0**	J	0.70	2.5	5	03/02/2016 13:06
1,2-Diphenylhydrazine	ND		0.80	1.2	5	03/02/2016 13:06
Fluoranthene	ND		0.65	1.2	5	03/02/2016 13:06
Fluorene	ND		0.70	1.2	5	03/02/2016 13:06
Hexachlorobenzene	ND		0.85	1.2	5	03/02/2016 13:06
Hexachlorobutadiene	ND		0.75	1.2	5	03/02/2016 13:06
Hexachlorocyclopentadiene	ND		3.6	6.5	5	03/02/2016 13:06
Hexachloroethane	ND		0.70	1.2	5	03/02/2016 13:06
Indeno (1,2,3-cd) pyrene	ND		0.70	1.2	5	03/02/2016 13:06
Isophorone	ND		0.60	1.2	5	03/02/2016 13:06
2-Methylnaphthalene	ND		0.70	1.2	5	03/02/2016 13:06
2-Methylphenol (o-Cresol)	ND		0.70	1.2	5	03/02/2016 13:06
3 & 4-Methylphenol (m,p-Cresol)	ND		0.60	1.2	5	03/02/2016 13:06
Naphthalene	ND		0.65	1.2	5	03/02/2016 13:06
2-Nitroaniline	ND		3.1	6.5	5	03/02/2016 13:06
3-Nitroaniline	ND		3.0	6.5	5	03/02/2016 13:06
4-Nitroaniline	ND		2.8	6.5	5	03/02/2016 13:06
Nitrobenzene	ND		0.70	6.5	5	03/02/2016 13:06
2-Nitrophenol	ND		3.2	6.5	5	03/02/2016 13:06
4-Nitrophenol	ND		2.0	6.5	5	03/02/2016 13:06
N-Nitrosodiphenylamine	ND		0.80	1.2	5	03/02/2016 13:06
N-Nitrosodi-n-propylamine	ND		0.65	1.2	5	03/02/2016 13:06
Pentachlorophenol	ND		0.30	6.5	5	03/02/2016 13:06
Phenanthrene	ND		0.70	1.2	5	03/02/2016 13:06
Phenol	ND		0.60	1.2	5	03/02/2016 13:06
Pyrene	ND		0.65	1.2	5	03/02/2016 13:06
1,2,4-Trichlorobenzene	ND		0.70	1.2	5	03/02/2016 13:06
2,4,5-Trichlorophenol	ND		0.60	1.2	5	03/02/2016 13:06
2,4,6-Trichlorophenol	ND		0.70	1.2	5	03/02/2016 13:06

(Cont.)

McCampbell Analytical, Inc.
"When Quality Counts"

1534 Willow Pass Road, Pittsburg, CA 94565-1701
Toll Free Telephone: (877) 252-9262 / Fax: (925) 252-9269
http://www.mccampbell.com / E-mail: main@mccampbell.com

Analytical Report

Client:	AEW Engineering, Inc.	**WorkOrder:**	1602A52
Date Received:	2/25/16 16:16	**Extraction Method:**	SW3550B/3640A
Date Prepared:	2/26/16	**Analytical Method:**	SW8270C
Project:	2015-29; Sausalito Gate 5 Characterization	**Unit:**	mg/Kg

Semi-Volatile Organics by GC/MS (Basic Target List) w/ GPC Clean Up

Client ID	Lab ID	Matrix	Date Collected	Instrument	Batch ID
COMP AEW-B6,B7 2.5-5'	**1602A52-007A**	**Soil**	**02/24/2016**	**GC21**	**117265**

Analytes	Result	Qualifiers	MDL	RL	DF	Date Analyzed
Surrogates	**REC (%)**			**Limits**		
2-Fluorophenol	99			30-130		03/02/2016 13:06
Phenol-d5	96			30-130		03/02/2016 13:06
Nitrobenzene-d5	72			30-130		03/02/2016 13:06
2-Fluorobiphenyl	79			30-130		03/02/2016 13:06
2,4,6-Tribromophenol	61			10-130		03/02/2016 13:06
4-Terphenyl-d14	73			30-130		03/02/2016 13:06

Analyst(s): REB Analytical Comments: a3

(Cont.)

McCampbell Analytical, Inc.
"When Quality Counts"

1534 Willow Pass Road, Pittsburg, CA 94565-1701
Toll Free Telephone: (877) 252-9262 / Fax: (925) 252-9269
http://www.mccampbell.com / E-mail: main@mccampbell.com

Analytical Report

Client:	AEW Engineering, Inc.	**WorkOrder:**	1602A52
Date Received:	2/25/16 16:16	**Extraction Method:**	SW3550B/3640A
Date Prepared:	2/26/16	**Analytical Method:**	SW8270C
Project:	2015-29; Sausalito Gate 5 Characterization	**Unit:**	mg/Kg

Semi-Volatile Organics by GC/MS (Basic Target List) w/ GPC Clean Up

Client ID	Lab ID	Matrix	Date Collected	Instrument	Batch ID
COMP AEW-B6,B7 10-15'	**1602A52-008A**	**Soil**	**02/24/2016**	**GC17**	**117265**

Analytes	Result	MDL	RL	DF	Date Analyzed
Acenaphthene	ND	0.14	0.25	1	03/01/2016 11:49
Acenaphthylene	ND	0.14	0.25	1	03/01/2016 11:49
Acetochlor	ND	0.25	0.25	1	03/01/2016 11:49
Anthracene	ND	0.14	0.25	1	03/01/2016 11:49
Benzidine	ND	0.23	1.3	1	03/01/2016 11:49
Benzo (a) anthracene	ND	0.14	0.25	1	03/01/2016 11:49
Benzo (b) fluoranthene	ND	0.14	0.25	1	03/01/2016 11:49
Benzo (k) fluoranthene	ND	0.16	0.25	1	03/01/2016 11:49
Benzo (g,h,i) perylene	ND	0.15	0.25	1	03/01/2016 11:49
Benzo (a) pyrene	ND	0.14	0.25	1	03/01/2016 11:49
Benzyl Alcohol	ND	0.51	1.3	1	03/01/2016 11:49
1,1-Biphenyl	ND	0.15	0.25	1	03/01/2016 11:49
Bis (2-chloroethoxy) Methane	ND	0.14	0.25	1	03/01/2016 11:49
Bis (2-chloroethyl) Ether	ND	0.13	0.25	1	03/01/2016 11:49
Bis (2-chloroisopropyl) Ether	ND	0.12	0.25	1	03/01/2016 11:49
Bis (2-ethylhexyl) Adipate	ND	0.25	0.25	1	03/01/2016 11:49
Bis (2-ethylhexyl) Phthalate	ND	0.13	0.25	1	03/01/2016 11:49
4-Bromophenyl Phenyl Ether	ND	0.16	0.25	1	03/01/2016 11:49
Butylbenzyl Phthalate	ND	0.13	0.25	1	03/01/2016 11:49
4-Chloroaniline	ND	0.13	0.25	1	03/01/2016 11:49
4-Chloro-3-methylphenol	ND	0.12	0.25	1	03/01/2016 11:49
2-Chloronaphthalene	ND	0.16	0.25	1	03/01/2016 11:49
2-Chlorophenol	ND	0.14	0.25	1	03/01/2016 11:49
4-Chlorophenyl Phenyl Ether	ND	0.15	0.25	1	03/01/2016 11:49
Chrysene	ND	0.14	0.25	1	03/01/2016 11:49
Dibenzo (a,h) anthracene	ND	0.16	0.25	1	03/01/2016 11:49
Dibenzofuran	ND	0.13	0.25	1	03/01/2016 11:49
Di-n-butyl Phthalate	ND	0.13	0.25	1	03/01/2016 11:49
1,2-Dichlorobenzene	ND	0.12	0.25	1	03/01/2016 11:49
1,3-Dichlorobenzene	ND	0.14	0.25	1	03/01/2016 11:49
1,4-Dichlorobenzene	ND	0.13	0.25	1	03/01/2016 11:49
3,3-Dichlorobenzidine	ND	0.12	0.50	1	03/01/2016 11:49
2,4-Dichlorophenol	ND	0.13	0.25	1	03/01/2016 11:49
Diethyl Phthalate	ND	0.14	0.25	1	03/01/2016 11:49
2,4-Dimethylphenol	ND	0.13	0.25	1	03/01/2016 11:49
Dimethyl Phthalate	ND	0.14	0.25	1	03/01/2016 11:49
4,6-Dinitro-2-methylphenol	ND	0.13	1.3	1	03/01/2016 11:49

(Cont.)

McCampbell Analytical, Inc.
"When Quality Counts"

1534 Willow Pass Road, Pittsburg, CA 94565-1701
Toll Free Telephone: (877) 252-9262 / Fax: (925) 252-9269
http://www.mccampbell.com / E-mail: main@mccampbell.com

Analytical Report

Client:	AEW Engineering, Inc.	**WorkOrder:**	1602A52
Date Received:	2/25/16 16:16	**Extraction Method:**	SW3550B/3640A
Date Prepared:	2/26/16	**Analytical Method:**	SW8270C
Project:	2015-29; Sausalito Gate 5 Characterization	**Unit:**	mg/Kg

Semi-Volatile Organics by GC/MS (Basic Target List) w/ GPC Clean Up

Client ID	Lab ID	Matrix	Date Collected	Instrument	Batch ID
COMP AEW-B6,B7 10-15'	**1602A52-008A**	**Soil**	**02/24/2016**	**GC17**	**117265**

Analytes	Result	MDL	RL	DF	Date Analyzed
2,4-Dinitrophenol	ND	1.3	6.3	1	03/01/2016 11:49
2,4-Dinitrotoluene	ND	0.13	0.25	1	03/01/2016 11:49
2,6-Dinitrotoluene	ND	0.14	0.25	1	03/01/2016 11:49
Di-n-octyl Phthalate	ND	0.14	0.50	1	03/01/2016 11:49
1,2-Diphenylhydrazine	ND	0.16	0.25	1	03/01/2016 11:49
Fluoranthene	ND	0.13	0.25	1	03/01/2016 11:49
Fluorene	ND	0.14	0.25	1	03/01/2016 11:49
Hexachlorobenzene	ND	0.17	0.25	1	03/01/2016 11:49
Hexachlorobutadiene	ND	0.15	0.25	1	03/01/2016 11:49
Hexachlorocyclopentadiene	ND	0.73	1.3	1	03/01/2016 11:49
Hexachloroethane	ND	0.14	0.25	1	03/01/2016 11:49
Indeno (1,2,3-cd) pyrene	ND	0.14	0.25	1	03/01/2016 11:49
Isophorone	ND	0.12	0.25	1	03/01/2016 11:49
2-Methylnaphthalene	ND	0.14	0.25	1	03/01/2016 11:49
2-Methylphenol (o-Cresol)	ND	0.14	0.25	1	03/01/2016 11:49
3 & 4-Methylphenol (m,p-Cresol)	ND	0.12	0.25	1	03/01/2016 11:49
Naphthalene	ND	0.13	0.25	1	03/01/2016 11:49
2-Nitroaniline	ND	0.62	1.3	1	03/01/2016 11:49
3-Nitroaniline	ND	0.59	1.3	1	03/01/2016 11:49
4-Nitroaniline	ND	0.55	1.3	1	03/01/2016 11:49
Nitrobenzene	ND	0.14	1.3	1	03/01/2016 11:49
2-Nitrophenol	ND	0.64	1.3	1	03/01/2016 11:49
4-Nitrophenol	ND	0.41	1.3	1	03/01/2016 11:49
N-Nitrosodiphenylamine	ND	0.16	0.25	1	03/01/2016 11:49
N-Nitrosodi-n-propylamine	ND	0.13	0.25	1	03/01/2016 11:49
Pentachlorophenol	ND	0.061	1.3	1	03/01/2016 11:49
Phenanthrene	ND	0.14	0.25	1	03/01/2016 11:49
Phenol	ND	0.12	0.25	1	03/01/2016 11:49
Pyrene	ND	0.13	0.25	1	03/01/2016 11:49
1,2,4-Trichlorobenzene	ND	0.14	0.25	1	03/01/2016 11:49
2,4,5-Trichlorophenol	ND	0.12	0.25	1	03/01/2016 11:49
2,4,6-Trichlorophenol	ND	0.14	0.25	1	03/01/2016 11:49

(Cont.)

McCampbell Analytical, Inc.
"When Quality Counts"

1534 Willow Pass Road, Pittsburg, CA 94565-1701
Toll Free Telephone: (877) 252-9262 / Fax: (925) 252-9269
http://www.mccampbell.com / E-mail: main@mccampbell.com

Analytical Report

Client:	AEW Engineering, Inc.	**WorkOrder:**	1602A52
Date Received:	2/25/16 16:16	**Extraction Method:**	SW3550B/3640A
Date Prepared:	2/26/16	**Analytical Method:**	SW8270C
Project:	2015-29; Sausalito Gate 5 Characterization	**Unit:**	mg/Kg

Semi-Volatile Organics by GC/MS (Basic Target List) w/ GPC Clean Up

Client ID	Lab ID	Matrix	Date Collected	Instrument	Batch ID
COMP AEW-B6,B7 10-15'	**1602A52-008A**	**Soil**	**02/24/2016**	**GC17**	**117265**

Analytes	Result	MDL	RL	DF	Date Analyzed
Surrogates	REC (%)		Limits		
2-Fluorophenol	100		30-130		03/01/2016 11:49
Phenol-d5	92		30-130		03/01/2016 11:49
Nitrobenzene-d5	88		30-130		03/01/2016 11:49
2-Fluorobiphenyl	85		30-130		03/01/2016 11:49
2,4,6-Tribromophenol	40		10-130		03/01/2016 11:49
4-Terphenyl-d14	101		30-130		03/01/2016 11:49

Analyst(s): REB

(Cont.)

McCampbell Analytical, Inc.
"When Quality Counts"

1534 Willow Pass Road, Pittsburg, CA 94565-1701
Toll Free Telephone: (877) 252-9262 / Fax: (925) 252-9269
http://www.mccampbell.com / E-mail: main@mccampbell.com

Analytical Report

Client:	AEW Engineering, Inc.	**WorkOrder:**	1602A52
Date Received:	2/25/16 16:16	**Extraction Method:**	SW3550B/3640A
Date Prepared:	2/26/16	**Analytical Method:**	SW8270C
Project:	2015-29; Sausalito Gate 5 Characterization	**Unit:**	mg/Kg

Semi-Volatile Organics by GC/MS (Basic Target List) w/ GPC Clean Up

Client ID	Lab ID	Matrix	Date Collected	Instrument	Batch ID
COMP AEW-B8,B9 2.5-5'	**1602A52-009A**	**Soil**	**02/24/2016**	**GC17**	**117265**

Analytes	Result	MDL	RL	DF	Date Analyzed
Acenaphthene	ND	1.4	2.5	10	03/02/2016 11:47
Acenaphthylene	ND	1.4	2.5	10	03/02/2016 11:47
Acetochlor	ND	2.5	2.5	10	03/02/2016 11:47
Anthracene	ND	1.4	2.5	10	03/02/2016 11:47
Benzidine	ND	2.3	13	10	03/02/2016 11:47
Benzo (a) anthracene	ND	1.4	2.5	10	03/02/2016 11:47
Benzo (b) fluoranthene	ND	1.4	2.5	10	03/02/2016 11:47
Benzo (k) fluoranthene	ND	1.6	2.5	10	03/02/2016 11:47
Benzo (g,h,i) perylene	ND	1.5	2.5	10	03/02/2016 11:47
Benzo (a) pyrene	ND	1.4	2.5	10	03/02/2016 11:47
Benzyl Alcohol	ND	5.1	13	10	03/02/2016 11:47
1,1-Biphenyl	ND	1.5	2.5	10	03/02/2016 11:47
Bis (2-chloroethoxy) Methane	ND	1.4	2.5	10	03/02/2016 11:47
Bis (2-chloroethyl) Ether	ND	1.3	2.5	10	03/02/2016 11:47
Bis (2-chloroisopropyl) Ether	ND	1.2	2.5	10	03/02/2016 11:47
Bis (2-ethylhexyl) Adipate	ND	2.5	2.5	10	03/02/2016 11:47
Bis (2-ethylhexyl) Phthalate	ND	1.3	2.5	10	03/02/2016 11:47
4-Bromophenyl Phenyl Ether	ND	1.6	2.5	10	03/02/2016 11:47
Butylbenzyl Phthalate	ND	1.3	2.5	10	03/02/2016 11:47
4-Chloroaniline	ND	1.3	2.5	10	03/02/2016 11:47
4-Chloro-3-methylphenol	ND	1.2	2.5	10	03/02/2016 11:47
2-Chloronaphthalene	ND	1.6	2.5	10	03/02/2016 11:47
2-Chlorophenol	ND	1.4	2.5	10	03/02/2016 11:47
4-Chlorophenyl Phenyl Ether	ND	1.5	2.5	10	03/02/2016 11:47
Chrysene	ND	1.4	2.5	10	03/02/2016 11:47
Dibenzo (a,h) anthracene	ND	1.6	2.5	10	03/02/2016 11:47
Dibenzofuran	ND	1.3	2.5	10	03/02/2016 11:47
Di-n-butyl Phthalate	ND	1.3	2.5	10	03/02/2016 11:47
1,2-Dichlorobenzene	ND	1.2	2.5	10	03/02/2016 11:47
1,3-Dichlorobenzene	ND	1.4	2.5	10	03/02/2016 11:47
1,4-Dichlorobenzene	ND	1.3	2.5	10	03/02/2016 11:47
3,3-Dichlorobenzidine	ND	1.2	5.0	10	03/02/2016 11:47
2,4-Dichlorophenol	ND	1.3	2.5	10	03/02/2016 11:47
Diethyl Phthalate	ND	1.4	2.5	10	03/02/2016 11:47
2,4-Dimethylphenol	ND	1.3	2.5	10	03/02/2016 11:47
Dimethyl Phthalate	ND	1.4	2.5	10	03/02/2016 11:47
4,6-Dinitro-2-methylphenol	ND	1.3	13	10	03/02/2016 11:47

(Cont.)

McCampbell Analytical, Inc.
"When Quality Counts"

1534 Willow Pass Road, Pittsburg, CA 94565-1701
Toll Free Telephone: (877) 252-9262 / Fax: (925) 252-9269
http://www.mccampbell.com / E-mail: main@mccampbell.com

Analytical Report

Client:	AEW Engineering, Inc.	**WorkOrder:**	1602A52
Date Received:	2/25/16 16:16	**Extraction Method:**	SW3550B/3640A
Date Prepared:	2/26/16	**Analytical Method:**	SW8270C
Project:	2015-29; Sausalito Gate 5 Characterization	**Unit:**	mg/Kg

Semi-Volatile Organics by GC/MS (Basic Target List) w/ GPC Clean Up

Client ID	Lab ID	Matrix	Date Collected	Instrument	Batch ID
COMP AEW-B8,B9 2.5-5'	**1602A52-009A**	**Soil**	**02/24/2016**	**GC17**	**117265**

Analytes	Result	MDL	RL	DF	Date Analyzed
2,4-Dinitrophenol	ND	13	63	10	03/02/2016 11:47
2,4-Dinitrotoluene	ND	1.3	2.5	10	03/02/2016 11:47
2,6-Dinitrotoluene	ND	1.4	2.5	10	03/02/2016 11:47
Di-n-octyl Phthalate	ND	1.4	5.0	10	03/02/2016 11:47
1,2-Diphenylhydrazine	ND	1.6	2.5	10	03/02/2016 11:47
Fluoranthene	ND	1.3	2.5	10	03/02/2016 11:47
Fluorene	ND	1.4	2.5	10	03/02/2016 11:47
Hexachlorobenzene	ND	1.7	2.5	10	03/02/2016 11:47
Hexachlorobutadiene	ND	1.5	2.5	10	03/02/2016 11:47
Hexachlorocyclopentadiene	ND	7.3	13	10	03/02/2016 11:47
Hexachloroethane	ND	1.4	2.5	10	03/02/2016 11:47
Indeno (1,2,3-cd) pyrene	ND	1.4	2.5	10	03/02/2016 11:47
Isophorone	ND	1.2	2.5	10	03/02/2016 11:47
2-Methylnaphthalene	ND	1.4	2.5	10	03/02/2016 11:47
2-Methylphenol (o-Cresol)	ND	1.4	2.5	10	03/02/2016 11:47
3 & 4-Methylphenol (m,p-Cresol)	ND	1.2	2.5	10	03/02/2016 11:47
Naphthalene	ND	1.3	2.5	10	03/02/2016 11:47
2-Nitroaniline	ND	6.2	13	10	03/02/2016 11:47
3-Nitroaniline	ND	5.9	13	10	03/02/2016 11:47
4-Nitroaniline	ND	5.5	13	10	03/02/2016 11:47
Nitrobenzene	ND	1.4	13	10	03/02/2016 11:47
2-Nitrophenol	ND	6.4	13	10	03/02/2016 11:47
4-Nitrophenol	ND	4.1	13	10	03/02/2016 11:47
N-Nitrosodiphenylamine	ND	1.6	2.5	10	03/02/2016 11:47
N-Nitrosodi-n-propylamine	ND	1.3	2.5	10	03/02/2016 11:47
Pentachlorophenol	ND	0.61	13	10	03/02/2016 11:47
Phenanthrene	ND	1.4	2.5	10	03/02/2016 11:47
Phenol	ND	1.2	2.5	10	03/02/2016 11:47
Pyrene	ND	1.3	2.5	10	03/02/2016 11:47
1,2,4-Trichlorobenzene	ND	1.4	2.5	10	03/02/2016 11:47
2,4,5-Trichlorophenol	ND	1.2	2.5	10	03/02/2016 11:47
2,4,6-Trichlorophenol	ND	1.4	2.5	10	03/02/2016 11:47

(Cont.)

McCampbell Analytical, Inc.
"When Quality Counts"

1534 Willow Pass Road, Pittsburg, CA 94565-1701
Toll Free Telephone: (877) 252-9262 / Fax: (925) 252-9269
http://www.mccampbell.com / E-mail: main@mccampbell.com

Analytical Report

Client:	AEW Engineering, Inc.	**WorkOrder:**	1602A52
Date Received:	2/25/16 16:16	**Extraction Method:**	SW3550B/3640A
Date Prepared:	2/26/16	**Analytical Method:**	SW8270C
Project:	2015-29; Sausalito Gate 5 Characterization	**Unit:**	mg/Kg

Semi-Volatile Organics by GC/MS (Basic Target List) w/ GPC Clean Up

Client ID	Lab ID	Matrix	Date Collected	Instrument	Batch ID
COMP AEW-B8,B9 2.5-5'	**1602A52-009A**	**Soil**	**02/24/2016**	**GC17**	**117265**

Analytes	Result	MDL	RL	DF	Date Analyzed
Surrogates	REC (%)		Limits		
2-Fluorophenol	83		30-130		03/02/2016 11:47
Phenol-d5	81		30-130		03/02/2016 11:47
Nitrobenzene-d5	74		30-130		03/02/2016 11:47
2-Fluorobiphenyl	71		30-130		03/02/2016 11:47
2,4,6-Tribromophenol	44		10-130		03/02/2016 11:47
4-Terphenyl-d14	94		30-130		03/02/2016 11:47

Analyst(s): REB Analytical Comments: a3

(Cont.)

McCampbell Analytical, Inc.
"When Quality Counts"

1534 Willow Pass Road, Pittsburg, CA 94565-1701
Toll Free Telephone: (877) 252-9262 / Fax: (925) 252-9269
http://www.mccampbell.com / E-mail: main@mccampbell.com

Analytical Report

Client:	AEW Engineering, Inc.	**WorkOrder:**	1602A52
Date Received:	2/25/16 16:16	**Extraction Method:**	SW3550B/3640A
Date Prepared:	2/26/16	**Analytical Method:**	SW8270C
Project:	2015-29; Sausalito Gate 5 Characterization	**Unit:**	mg/Kg

Semi-Volatile Organics by GC/MS (Basic Target List) w/ GPC Clean Up

Client ID	Lab ID	Matrix	Date Collected	Instrument	Batch ID
COMP AEW-B8,B9 10-15'	**1602A52-010A**	**Soil**	**02/24/2016**	**GC17**	**117265**

Analytes	Result	MDL	RL	DF	Date Analyzed
Acenaphthene	ND	0.14	0.25	1	03/01/2016 12:17
Acenaphthylene	ND	0.14	0.25	1	03/01/2016 12:17
Acetochlor	ND	0.25	0.25	1	03/01/2016 12:17
Anthracene	ND	0.14	0.25	1	03/01/2016 12:17
Benzidine	ND	0.23	1.3	1	03/01/2016 12:17
Benzo (a) anthracene	ND	0.14	0.25	1	03/01/2016 12:17
Benzo (b) fluoranthene	ND	0.14	0.25	1	03/01/2016 12:17
Benzo (k) fluoranthene	ND	0.16	0.25	1	03/01/2016 12:17
Benzo (g,h,i) perylene	ND	0.15	0.25	1	03/01/2016 12:17
Benzo (a) pyrene	ND	0.14	0.25	1	03/01/2016 12:17
Benzyl Alcohol	ND	0.51	1.3	1	03/01/2016 12:17
1,1-Biphenyl	ND	0.15	0.25	1	03/01/2016 12:17
Bis (2-chloroethoxy) Methane	ND	0.14	0.25	1	03/01/2016 12:17
Bis (2-chloroethyl) Ether	ND	0.13	0.25	1	03/01/2016 12:17
Bis (2-chloroisopropyl) Ether	ND	0.12	0.25	1	03/01/2016 12:17
Bis (2-ethylhexyl) Adipate	ND	0.25	0.25	1	03/01/2016 12:17
Bis (2-ethylhexyl) Phthalate	ND	0.13	0.25	1	03/01/2016 12:17
4-Bromophenyl Phenyl Ether	ND	0.16	0.25	1	03/01/2016 12:17
Butylbenzyl Phthalate	ND	0.13	0.25	1	03/01/2016 12:17
4-Chloroaniline	ND	0.13	0.25	1	03/01/2016 12:17
4-Chloro-3-methylphenol	ND	0.12	0.25	1	03/01/2016 12:17
2-Chloronaphthalene	ND	0.16	0.25	1	03/01/2016 12:17
2-Chlorophenol	ND	0.14	0.25	1	03/01/2016 12:17
4-Chlorophenyl Phenyl Ether	ND	0.15	0.25	1	03/01/2016 12:17
Chrysene	ND	0.14	0.25	1	03/01/2016 12:17
Dibenzo (a,h) anthracene	ND	0.16	0.25	1	03/01/2016 12:17
Dibenzofuran	ND	0.13	0.25	1	03/01/2016 12:17
Di-n-butyl Phthalate	ND	0.13	0.25	1	03/01/2016 12:17
1,2-Dichlorobenzene	ND	0.12	0.25	1	03/01/2016 12:17
1,3-Dichlorobenzene	ND	0.14	0.25	1	03/01/2016 12:17
1,4-Dichlorobenzene	ND	0.13	0.25	1	03/01/2016 12:17
3,3-Dichlorobenzidine	ND	0.12	0.50	1	03/01/2016 12:17
2,4-Dichlorophenol	ND	0.13	0.25	1	03/01/2016 12:17
Diethyl Phthalate	ND	0.14	0.25	1	03/01/2016 12:17
2,4-Dimethylphenol	ND	0.13	0.25	1	03/01/2016 12:17
Dimethyl Phthalate	ND	0.14	0.25	1	03/01/2016 12:17
4,6-Dinitro-2-methylphenol	ND	0.13	1.3	1	03/01/2016 12:17

(Cont.)

McCampbell Analytical, Inc.
"When Quality Counts"

1534 Willow Pass Road, Pittsburg, CA 94565-1701
Toll Free Telephone: (877) 252-9262 / Fax: (925) 252-9269
http://www.mccampbell.com / E-mail: main@mccampbell.com

Analytical Report

Client:	AEW Engineering, Inc.	**WorkOrder:**	1602A52
Date Received:	2/25/16 16:16	**Extraction Method:**	SW3550B/3640A
Date Prepared:	2/26/16	**Analytical Method:**	SW8270C
Project:	2015-29; Sausalito Gate 5 Characterization	**Unit:**	mg/Kg

Semi-Volatile Organics by GC/MS (Basic Target List) w/ GPC Clean Up

Client ID	Lab ID	Matrix	Date Collected	Instrument	Batch ID
COMP AEW-B8,B9 10-15'	**1602A52-010A**	**Soil**	**02/24/2016**	**GC17**	**117265**

Analytes	Result	MDL	RL	DF	Date Analyzed
2,4-Dinitrophenol	ND	1.3	6.3	1	03/01/2016 12:17
2,4-Dinitrotoluene	ND	0.13	0.25	1	03/01/2016 12:17
2,6-Dinitrotoluene	ND	0.14	0.25	1	03/01/2016 12:17
Di-n-octyl Phthalate	ND	0.14	0.50	1	03/01/2016 12:17
1,2-Diphenylhydrazine	ND	0.16	0.25	1	03/01/2016 12:17
Fluoranthene	ND	0.13	0.25	1	03/01/2016 12:17
Fluorene	ND	0.14	0.25	1	03/01/2016 12:17
Hexachlorobenzene	ND	0.17	0.25	1	03/01/2016 12:17
Hexachlorobutadiene	ND	0.15	0.25	1	03/01/2016 12:17
Hexachlorocyclopentadiene	ND	0.73	1.3	1	03/01/2016 12:17
Hexachloroethane	ND	0.14	0.25	1	03/01/2016 12:17
Indeno (1,2,3-cd) pyrene	ND	0.14	0.25	1	03/01/2016 12:17
Isophorone	ND	0.12	0.25	1	03/01/2016 12:17
2-Methylnaphthalene	ND	0.14	0.25	1	03/01/2016 12:17
2-Methylphenol (o-Cresol)	ND	0.14	0.25	1	03/01/2016 12:17
3 & 4-Methylphenol (m,p-Cresol)	ND	0.12	0.25	1	03/01/2016 12:17
Naphthalene	ND	0.13	0.25	1	03/01/2016 12:17
2-Nitroaniline	ND	0.62	1.3	1	03/01/2016 12:17
3-Nitroaniline	ND	0.59	1.3	1	03/01/2016 12:17
4-Nitroaniline	ND	0.55	1.3	1	03/01/2016 12:17
Nitrobenzene	ND	0.14	1.3	1	03/01/2016 12:17
2-Nitrophenol	ND	0.64	1.3	1	03/01/2016 12:17
4-Nitrophenol	ND	0.41	1.3	1	03/01/2016 12:17
N-Nitrosodiphenylamine	ND	0.16	0.25	1	03/01/2016 12:17
N-Nitrosodi-n-propylamine	ND	0.13	0.25	1	03/01/2016 12:17
Pentachlorophenol	ND	0.061	1.3	1	03/01/2016 12:17
Phenanthrene	ND	0.14	0.25	1	03/01/2016 12:17
Phenol	ND	0.12	0.25	1	03/01/2016 12:17
Pyrene	ND	0.13	0.25	1	03/01/2016 12:17
1,2,4-Trichlorobenzene	ND	0.14	0.25	1	03/01/2016 12:17
2,4,5-Trichlorophenol	ND	0.12	0.25	1	03/01/2016 12:17
2,4,6-Trichlorophenol	ND	0.14	0.25	1	03/01/2016 12:17

(Cont.)

McCampbell Analytical, Inc.
"When Quality Counts"

1534 Willow Pass Road, Pittsburg, CA 94565-1701
Toll Free Telephone: (877) 252-9262 / Fax: (925) 252-9269
http://www.mccampbell.com / E-mail: main@mccampbell.com

Analytical Report

Client:	AEW Engineering, Inc.	**WorkOrder:**	1602A52
Date Received:	2/25/16 16:16	**Extraction Method:**	SW3550B/3640A
Date Prepared:	2/26/16	**Analytical Method:**	SW8270C
Project:	2015-29; Sausalito Gate 5 Characterization	**Unit:**	mg/Kg

Semi-Volatile Organics by GC/MS (Basic Target List) w/ GPC Clean Up

Client ID	Lab ID	Matrix	Date Collected	Instrument	Batch ID
COMP AEW-B8,B9 10-15'	**1602A52-010A**	**Soil**	**02/24/2016**	**GC17**	**117265**

Analytes	Result	MDL	RL	DF	Date Analyzed
Surrogates	REC (%)		Limits		
2-Fluorophenol	104		30-130		03/01/2016 12:17
Phenol-d5	96		30-130		03/01/2016 12:17
Nitrobenzene-d5	92		30-130		03/01/2016 12:17
2-Fluorobiphenyl	87		30-130		03/01/2016 12:17
2,4,6-Tribromophenol	54		10-130		03/01/2016 12:17
4-Terphenyl-d14	94		30-130		03/01/2016 12:17

Analyst(s): REB

(Cont.)

McCampbell Analytical, Inc.
"When Quality Counts"

1534 Willow Pass Road, Pittsburg, CA 94565-1701
Toll Free Telephone: (877) 252-9262 / Fax: (925) 252-9269
http://www.mccampbell.com / E-mail: main@mccampbell.com

Analytical Report

Client:	AEW Engineering, Inc.	**WorkOrder:**	1602A52
Date Received:	2/25/16 16:16	**Extraction Method:**	SW3550B/3640A
Date Prepared:	2/26/16	**Analytical Method:**	SW8270C
Project:	2015-29; Sausalito Gate 5 Characterization	**Unit:**	mg/Kg

Semi-Volatile Organics by GC/MS (Basic Target List) w/ GPC Clean Up

Client ID	Lab ID	Matrix	Date Collected	Instrument	Batch ID
COMP AEW-B10,B13 2.5-5'	**1602A52-011A**	**Soil**	**02/25/2016**	**GC17**	**117280**

Analytes	Result	MDL	RL	DF	Date Analyzed
Acenaphthene	ND	1.4	2.5	10	03/02/2016 12:16
Acenaphthylene	ND	1.4	2.5	10	03/02/2016 12:16
Acetochlor	ND	2.5	2.5	10	03/02/2016 12:16
Anthracene	ND	1.4	2.5	10	03/02/2016 12:16
Benzidine	ND	2.3	13	10	03/02/2016 12:16
Benzo (a) anthracene	ND	1.4	2.5	10	03/02/2016 12:16
Benzo (b) fluoranthene	ND	1.4	2.5	10	03/02/2016 12:16
Benzo (k) fluoranthene	ND	1.6	2.5	10	03/02/2016 12:16
Benzo (g,h,i) perylene	ND	1.5	2.5	10	03/02/2016 12:16
Benzo (a) pyrene	ND	1.4	2.5	10	03/02/2016 12:16
Benzyl Alcohol	ND	5.1	13	10	03/02/2016 12:16
1,1-Biphenyl	ND	1.5	2.5	10	03/02/2016 12:16
Bis (2-chloroethoxy) Methane	ND	1.4	2.5	10	03/02/2016 12:16
Bis (2-chloroethyl) Ether	ND	1.3	2.5	10	03/02/2016 12:16
Bis (2-chloroisopropyl) Ether	ND	1.2	2.5	10	03/02/2016 12:16
Bis (2-ethylhexyl) Adipate	ND	2.5	2.5	10	03/02/2016 12:16
Bis (2-ethylhexyl) Phthalate	ND	1.3	2.5	10	03/02/2016 12:16
4-Bromophenyl Phenyl Ether	ND	1.6	2.5	10	03/02/2016 12:16
Butylbenzyl Phthalate	ND	1.3	2.5	10	03/02/2016 12:16
4-Chloroaniline	ND	1.3	2.5	10	03/02/2016 12:16
4-Chloro-3-methylphenol	ND	1.2	2.5	10	03/02/2016 12:16
2-Chloronaphthalene	ND	1.6	2.5	10	03/02/2016 12:16
2-Chlorophenol	ND	1.4	2.5	10	03/02/2016 12:16
4-Chlorophenyl Phenyl Ether	ND	1.5	2.5	10	03/02/2016 12:16
Chrysene	ND	1.4	2.5	10	03/02/2016 12:16
Dibenzo (a,h) anthracene	ND	1.6	2.5	10	03/02/2016 12:16
Dibenzofuran	ND	1.3	2.5	10	03/02/2016 12:16
Di-n-butyl Phthalate	ND	1.3	2.5	10	03/02/2016 12:16
1,2-Dichlorobenzene	ND	1.2	2.5	10	03/02/2016 12:16
1,3-Dichlorobenzene	ND	1.4	2.5	10	03/02/2016 12:16
1,4-Dichlorobenzene	ND	1.3	2.5	10	03/02/2016 12:16
3,3-Dichlorobenzidine	ND	1.2	5.0	10	03/02/2016 12:16
2,4-Dichlorophenol	ND	1.3	2.5	10	03/02/2016 12:16
Diethyl Phthalate	ND	1.4	2.5	10	03/02/2016 12:16
2,4-Dimethylphenol	ND	1.3	2.5	10	03/02/2016 12:16
Dimethyl Phthalate	ND	1.4	2.5	10	03/02/2016 12:16
4,6-Dinitro-2-methylphenol	ND	1.3	13	10	03/02/2016 12:16

(Cont.)

McCampbell Analytical, Inc.
"When Quality Counts"

1534 Willow Pass Road, Pittsburg, CA 94565-1701
Toll Free Telephone: (877) 252-9262 / Fax: (925) 252-9269
http://www.mccampbell.com / E-mail: main@mccampbell.com

Analytical Report

Client:	AEW Engineering, Inc.	**WorkOrder:**	1602A52
Date Received:	2/25/16 16:16	**Extraction Method:**	SW3550B/3640A
Date Prepared:	2/26/16	**Analytical Method:**	SW8270C
Project:	2015-29; Sausalito Gate 5 Characterization	**Unit:**	mg/Kg

Semi-Volatile Organics by GC/MS (Basic Target List) w/ GPC Clean Up

Client ID	Lab ID	Matrix	Date Collected	Instrument	Batch ID
COMP AEW-B10,B13 2.5-5'	**1602A52-011A**	**Soil**	**02/25/2016**	**GC17**	**117280**

Analytes	Result	MDL	RL	DF	Date Analyzed
2,4-Dinitrophenol	ND	13	63	10	03/02/2016 12:16
2,4-Dinitrotoluene	ND	1.3	2.5	10	03/02/2016 12:16
2,6-Dinitrotoluene	ND	1.4	2.5	10	03/02/2016 12:16
Di-n-octyl Phthalate	ND	1.4	5.0	10	03/02/2016 12:16
1,2-Diphenylhydrazine	ND	1.6	2.5	10	03/02/2016 12:16
Fluoranthene	ND	1.3	2.5	10	03/02/2016 12:16
Fluorene	ND	1.4	2.5	10	03/02/2016 12:16
Hexachlorobenzene	ND	1.7	2.5	10	03/02/2016 12:16
Hexachlorobutadiene	ND	1.5	2.5	10	03/02/2016 12:16
Hexachlorocyclopentadiene	ND	7.3	13	10	03/02/2016 12:16
Hexachloroethane	ND	1.4	2.5	10	03/02/2016 12:16
Indeno (1,2,3-cd) pyrene	ND	1.4	2.5	10	03/02/2016 12:16
Isophorone	ND	1.2	2.5	10	03/02/2016 12:16
2-Methylnaphthalene	ND	1.4	2.5	10	03/02/2016 12:16
2-Methylphenol (o-Cresol)	ND	1.4	2.5	10	03/02/2016 12:16
3 & 4-Methylphenol (m,p-Cresol)	ND	1.2	2.5	10	03/02/2016 12:16
Naphthalene	ND	1.3	2.5	10	03/02/2016 12:16
2-Nitroaniline	ND	6.2	13	10	03/02/2016 12:16
3-Nitroaniline	ND	5.9	13	10	03/02/2016 12:16
4-Nitroaniline	ND	5.5	13	10	03/02/2016 12:16
Nitrobenzene	ND	1.4	13	10	03/02/2016 12:16
2-Nitrophenol	ND	6.4	13	10	03/02/2016 12:16
4-Nitrophenol	ND	4.1	13	10	03/02/2016 12:16
N-Nitrosodiphenylamine	ND	1.6	2.5	10	03/02/2016 12:16
N-Nitrosodi-n-propylamine	ND	1.3	2.5	10	03/02/2016 12:16
Pentachlorophenol	ND	0.61	13	10	03/02/2016 12:16
Phenanthrene	ND	1.4	2.5	10	03/02/2016 12:16
Phenol	ND	1.2	2.5	10	03/02/2016 12:16
Pyrene	ND	1.3	2.5	10	03/02/2016 12:16
1,2,4-Trichlorobenzene	ND	1.4	2.5	10	03/02/2016 12:16
2,4,5-Trichlorophenol	ND	1.2	2.5	10	03/02/2016 12:16
2,4,6-Trichlorophenol	ND	1.4	2.5	10	03/02/2016 12:16

(Cont.)

McCampbell Analytical, Inc.
"When Quality Counts"

1534 Willow Pass Road, Pittsburg, CA 94565-1701
Toll Free Telephone: (877) 252-9262 / Fax: (925) 252-9269
http://www.mccampbell.com / E-mail: main@mccampbell.com

Analytical Report

Client:	AEW Engineering, Inc.	**WorkOrder:**	1602A52
Date Received:	2/25/16 16:16	**Extraction Method:**	SW3550B/3640A
Date Prepared:	2/26/16	**Analytical Method:**	SW8270C
Project:	2015-29; Sausalito Gate 5 Characterization	**Unit:**	mg/Kg

Semi-Volatile Organics by GC/MS (Basic Target List) w/ GPC Clean Up

Client ID	Lab ID	Matrix	Date Collected	Instrument	Batch ID
COMP AEW-B10,B13 2.5-5'	**1602A52-011A**	**Soil**	**02/25/2016**	**GC17**	**117280**

Analytes	Result	MDL	RL	DF	Date Analyzed
Surrogates	**REC (%)**		**Limits**		
2-Fluorophenol	85		30-130		03/02/2016 12:16
Phenol-d5	78		30-130		03/02/2016 12:16
Nitrobenzene-d5	71		30-130		03/02/2016 12:16
2-Fluorobiphenyl	69		30-130		03/02/2016 12:16
2,4,6-Tribromophenol	43		10-130		03/02/2016 12:16
4-Terphenyl-d14	87		30-130		03/02/2016 12:16

Analyst(s): REB Analytical Comments: a3

(Cont.)

McCampbell Analytical, Inc.
"When Quality Counts"

1534 Willow Pass Road, Pittsburg, CA 94565-1701
Toll Free Telephone: (877) 252-9262 / Fax: (925) 252-9269
http://www.mccampbell.com / E-mail: main@mccampbell.com

Analytical Report

Client:	AEW Engineering, Inc.	**WorkOrder:**	1602A52
Date Received:	2/25/16 16:16	**Extraction Method:**	SW3550B/3640A
Date Prepared:	2/26/16	**Analytical Method:**	SW8270C
Project:	2015-29; Sausalito Gate 5 Characterization	**Unit:**	mg/Kg

Semi-Volatile Organics by GC/MS (Basic Target List) w/ GPC Clean Up

Client ID	Lab ID	Matrix	Date Collected	Instrument	Batch ID
COMP AEW-B10,B13 10-15'	**1602A52-012A**	**Soil**	**02/25/2016**	**GC17**	**117280**

Analytes	Result	MDL	RL	DF	Date Analyzed
Acenaphthene	ND	0.14	0.25	1	03/01/2016 12:46
Acenaphthylene	ND	0.14	0.25	1	03/01/2016 12:46
Acetochlor	ND	0.25	0.25	1	03/01/2016 12:46
Anthracene	ND	0.14	0.25	1	03/01/2016 12:46
Benzidine	ND	0.23	1.3	1	03/01/2016 12:46
Benzo (a) anthracene	ND	0.14	0.25	1	03/01/2016 12:46
Benzo (b) fluoranthene	ND	0.14	0.25	1	03/01/2016 12:46
Benzo (k) fluoranthene	ND	0.16	0.25	1	03/01/2016 12:46
Benzo (g,h,i) perylene	ND	0.15	0.25	1	03/01/2016 12:46
Benzo (a) pyrene	ND	0.14	0.25	1	03/01/2016 12:46
Benzyl Alcohol	ND	0.51	1.3	1	03/01/2016 12:46
1,1-Biphenyl	ND	0.15	0.25	1	03/01/2016 12:46
Bis (2-chloroethoxy) Methane	ND	0.14	0.25	1	03/01/2016 12:46
Bis (2-chloroethyl) Ether	ND	0.13	0.25	1	03/01/2016 12:46
Bis (2-chloroisopropyl) Ether	ND	0.12	0.25	1	03/01/2016 12:46
Bis (2-ethylhexyl) Adipate	ND	0.25	0.25	1	03/01/2016 12:46
Bis (2-ethylhexyl) Phthalate	ND	0.13	0.25	1	03/01/2016 12:46
4-Bromophenyl Phenyl Ether	ND	0.16	0.25	1	03/01/2016 12:46
Butylbenzyl Phthalate	ND	0.13	0.25	1	03/01/2016 12:46
4-Chloroaniline	ND	0.13	0.25	1	03/01/2016 12:46
4-Chloro-3-methylphenol	ND	0.12	0.25	1	03/01/2016 12:46
2-Chloronaphthalene	ND	0.16	0.25	1	03/01/2016 12:46
2-Chlorophenol	ND	0.14	0.25	1	03/01/2016 12:46
4-Chlorophenyl Phenyl Ether	ND	0.15	0.25	1	03/01/2016 12:46
Chrysene	ND	0.14	0.25	1	03/01/2016 12:46
Dibenzo (a,h) anthracene	ND	0.16	0.25	1	03/01/2016 12:46
Dibenzofuran	ND	0.13	0.25	1	03/01/2016 12:46
Di-n-butyl Phthalate	ND	0.13	0.25	1	03/01/2016 12:46
1,2-Dichlorobenzene	ND	0.12	0.25	1	03/01/2016 12:46
1,3-Dichlorobenzene	ND	0.14	0.25	1	03/01/2016 12:46
1,4-Dichlorobenzene	ND	0.13	0.25	1	03/01/2016 12:46
3,3-Dichlorobenzidine	ND	0.12	0.50	1	03/01/2016 12:46
2,4-Dichlorophenol	ND	0.13	0.25	1	03/01/2016 12:46
Diethyl Phthalate	ND	0.14	0.25	1	03/01/2016 12:46
2,4-Dimethylphenol	ND	0.13	0.25	1	03/01/2016 12:46
Dimethyl Phthalate	ND	0.14	0.25	1	03/01/2016 12:46
4,6-Dinitro-2-methylphenol	ND	0.13	1.3	1	03/01/2016 12:46

(Cont.)

McCampbell Analytical, Inc.
"When Quality Counts"

1534 Willow Pass Road, Pittsburg, CA 94565-1701
Toll Free Telephone: (877) 252-9262 / Fax: (925) 252-9269
http://www.mccampbell.com / E-mail: main@mccampbell.com

Analytical Report

Client:	AEW Engineering, Inc.	**WorkOrder:**	1602A52
Date Received:	2/25/16 16:16	**Extraction Method:**	SW3550B/3640A
Date Prepared:	2/26/16	**Analytical Method:**	SW8270C
Project:	2015-29; Sausalito Gate 5 Characterization	**Unit:**	mg/Kg

Semi-Volatile Organics by GC/MS (Basic Target List) w/ GPC Clean Up

Client ID	Lab ID	Matrix	Date Collected	Instrument	Batch ID
COMP AEW-B10,B13 10-15'	**1602A52-012A**	**Soil**	**02/25/2016**	**GC17**	**117280**

Analytes	Result	MDL	RL	DF	Date Analyzed
2,4-Dinitrophenol	ND	1.3	6.3	1	03/01/2016 12:46
2,4-Dinitrotoluene	ND	0.13	0.25	1	03/01/2016 12:46
2,6-Dinitrotoluene	ND	0.14	0.25	1	03/01/2016 12:46
Di-n-octyl Phthalate	ND	0.14	0.50	1	03/01/2016 12:46
1,2-Diphenylhydrazine	ND	0.16	0.25	1	03/01/2016 12:46
Fluoranthene	ND	0.13	0.25	1	03/01/2016 12:46
Fluorene	ND	0.14	0.25	1	03/01/2016 12:46
Hexachlorobenzene	ND	0.17	0.25	1	03/01/2016 12:46
Hexachlorobutadiene	ND	0.15	0.25	1	03/01/2016 12:46
Hexachlorocyclopentadiene	ND	0.73	1.3	1	03/01/2016 12:46
Hexachloroethane	ND	0.14	0.25	1	03/01/2016 12:46
Indeno (1,2,3-cd) pyrene	ND	0.14	0.25	1	03/01/2016 12:46
Isophorone	ND	0.12	0.25	1	03/01/2016 12:46
2-Methylnaphthalene	ND	0.14	0.25	1	03/01/2016 12:46
2-Methylphenol (o-Cresol)	ND	0.14	0.25	1	03/01/2016 12:46
3 & 4-Methylphenol (m,p-Cresol)	ND	0.12	0.25	1	03/01/2016 12:46
Naphthalene	ND	0.13	0.25	1	03/01/2016 12:46
2-Nitroaniline	ND	0.62	1.3	1	03/01/2016 12:46
3-Nitroaniline	ND	0.59	1.3	1	03/01/2016 12:46
4-Nitroaniline	ND	0.55	1.3	1	03/01/2016 12:46
Nitrobenzene	ND	0.14	1.3	1	03/01/2016 12:46
2-Nitrophenol	ND	0.64	1.3	1	03/01/2016 12:46
4-Nitrophenol	ND	0.41	1.3	1	03/01/2016 12:46
N-Nitrosodiphenylamine	ND	0.16	0.25	1	03/01/2016 12:46
N-Nitrosodi-n-propylamine	ND	0.13	0.25	1	03/01/2016 12:46
Pentachlorophenol	ND	0.061	1.3	1	03/01/2016 12:46
Phenanthrene	ND	0.14	0.25	1	03/01/2016 12:46
Phenol	ND	0.12	0.25	1	03/01/2016 12:46
Pyrene	ND	0.13	0.25	1	03/01/2016 12:46
1,2,4-Trichlorobenzene	ND	0.14	0.25	1	03/01/2016 12:46
2,4,5-Trichlorophenol	ND	0.12	0.25	1	03/01/2016 12:46
2,4,6-Trichlorophenol	ND	0.14	0.25	1	03/01/2016 12:46

(Cont.)

McCampbell Analytical, Inc.
"When Quality Counts"

1534 Willow Pass Road, Pittsburg, CA 94565-1701
Toll Free Telephone: (877) 252-9262 / Fax: (925) 252-9269
http://www.mccampbell.com / E-mail: main@mccampbell.com

Analytical Report

Client:	AEW Engineering, Inc.	**WorkOrder:**	1602A52
Date Received:	2/25/16 16:16	**Extraction Method:**	SW3550B/3640A
Date Prepared:	2/26/16	**Analytical Method:**	SW8270C
Project:	2015-29; Sausalito Gate 5 Characterization	**Unit:**	mg/Kg

Semi-Volatile Organics by GC/MS (Basic Target List) w/ GPC Clean Up

Client ID	Lab ID	Matrix	Date Collected	Instrument	Batch ID
COMP AEW-B10,B13 10-15'	**1602A52-012A**	**Soil**	**02/25/2016**	**GC17**	**117280**

Analytes	Result	MDL	RL	DF	Date Analyzed
Surrogates	REC (%)		Limits		
2-Fluorophenol	111		30-130		03/01/2016 12:46
Phenol-d5	105		30-130		03/01/2016 12:46
Nitrobenzene-d5	98		30-130		03/01/2016 12:46
2-Fluorobiphenyl	93		30-130		03/01/2016 12:46
2,4,6-Tribromophenol	54		10-130		03/01/2016 12:46
4-Terphenyl-d14	111		30-130		03/01/2016 12:46

Analyst(s): REB

(Cont.)

McCampbell Analytical, Inc.
"When Quality Counts"

1534 Willow Pass Road, Pittsburg, CA 94565-1701
Toll Free Telephone: (877) 252-9262 / Fax: (925) 252-9269
http://www.mccampbell.com / E-mail: main@mccampbell.com

Analytical Report

Client:	AEW Engineering, Inc.	**WorkOrder:**	1602A52
Date Received:	2/25/16 16:16	**Extraction Method:**	SW3550B/3640A
Date Prepared:	2/26/16	**Analytical Method:**	SW8270C
Project:	2015-29; Sausalito Gate 5 Characterization	**Unit:**	mg/Kg

Semi-Volatile Organics by GC/MS (Basic Target List) w/ GPC Clean Up

Client ID	Lab ID	Matrix	Date Collected	Instrument	Batch ID
COMP AEW-B12,B14 2.5-5'	**1602A52-013A**	**Soil**	**02/25/2016**	**GC17**	**117280**

Analytes	Result	MDL	RL	DF	Date Analyzed
Acenaphthene	ND	0.28	0.50	2	03/02/2016 12:45
Acenaphthylene	ND	0.28	0.50	2	03/02/2016 12:45
Acetochlor	ND	0.50	0.50	2	03/02/2016 12:45
Anthracene	ND	0.28	0.50	2	03/02/2016 12:45
Benzidine	ND	0.46	2.6	2	03/02/2016 12:45
Benzo (a) anthracene	ND	0.28	0.50	2	03/02/2016 12:45
Benzo (b) fluoranthene	ND	0.28	0.50	2	03/02/2016 12:45
Benzo (k) fluoranthene	ND	0.32	0.50	2	03/02/2016 12:45
Benzo (g,h,i) perylene	ND	0.30	0.50	2	03/02/2016 12:45
Benzo (a) pyrene	ND	0.28	0.50	2	03/02/2016 12:45
Benzyl Alcohol	ND	1.0	2.6	2	03/02/2016 12:45
1,1-Biphenyl	ND	0.30	0.50	2	03/02/2016 12:45
Bis (2-chloroethoxy) Methane	ND	0.28	0.50	2	03/02/2016 12:45
Bis (2-chloroethyl) Ether	ND	0.26	0.50	2	03/02/2016 12:45
Bis (2-chloroisopropyl) Ether	ND	0.24	0.50	2	03/02/2016 12:45
Bis (2-ethylhexyl) Adipate	ND	0.50	0.50	2	03/02/2016 12:45
Bis (2-ethylhexyl) Phthalate	ND	0.26	0.50	2	03/02/2016 12:45
4-Bromophenyl Phenyl Ether	ND	0.32	0.50	2	03/02/2016 12:45
Butylbenzyl Phthalate	ND	0.26	0.50	2	03/02/2016 12:45
4-Chloroaniline	ND	0.26	0.50	2	03/02/2016 12:45
4-Chloro-3-methylphenol	ND	0.24	0.50	2	03/02/2016 12:45
2-Chloronaphthalene	ND	0.32	0.50	2	03/02/2016 12:45
2-Chlorophenol	ND	0.28	0.50	2	03/02/2016 12:45
4-Chlorophenyl Phenyl Ether	ND	0.30	0.50	2	03/02/2016 12:45
Chrysene	ND	0.28	0.50	2	03/02/2016 12:45
Dibenzo (a,h) anthracene	ND	0.32	0.50	2	03/02/2016 12:45
Dibenzofuran	ND	0.26	0.50	2	03/02/2016 12:45
Di-n-butyl Phthalate	ND	0.26	0.50	2	03/02/2016 12:45
1,2-Dichlorobenzene	ND	0.24	0.50	2	03/02/2016 12:45
1,3-Dichlorobenzene	ND	0.28	0.50	2	03/02/2016 12:45
1,4-Dichlorobenzene	ND	0.26	0.50	2	03/02/2016 12:45
3,3-Dichlorobenzidine	ND	0.24	1.0	2	03/02/2016 12:45
2,4-Dichlorophenol	ND	0.26	0.50	2	03/02/2016 12:45
Diethyl Phthalate	ND	0.28	0.50	2	03/02/2016 12:45
2,4-Dimethylphenol	ND	0.26	0.50	2	03/02/2016 12:45
Dimethyl Phthalate	ND	0.28	0.50	2	03/02/2016 12:45
4,6-Dinitro-2-methylphenol	ND	0.26	2.6	2	03/02/2016 12:45

(Cont.)

McCampbell Analytical, Inc.
"When Quality Counts"

1534 Willow Pass Road, Pittsburg, CA 94565-1701
Toll Free Telephone: (877) 252-9262 / Fax: (925) 252-9269
http://www.mccampbell.com / E-mail: main@mccampbell.com

Analytical Report

Client:	AEW Engineering, Inc.	**WorkOrder:**	1602A52
Date Received:	2/25/16 16:16	**Extraction Method:**	SW3550B/3640A
Date Prepared:	2/26/16	**Analytical Method:**	SW8270C
Project:	2015-29; Sausalito Gate 5 Characterization	**Unit:**	mg/Kg

Semi-Volatile Organics by GC/MS (Basic Target List) w/ GPC Clean Up

Client ID	Lab ID	Matrix	Date Collected	Instrument	Batch ID
COMP AEW-B12,B14 2.5-5'	**1602A52-013A**	**Soil**	**02/25/2016**	**GC17**	**117280**

Analytes	Result	MDL	RL	DF	Date Analyzed
2,4-Dinitrophenol	ND	2.6	13	2	03/02/2016 12:45
2,4-Dinitrotoluene	ND	0.26	0.50	2	03/02/2016 12:45
2,6-Dinitrotoluene	ND	0.28	0.50	2	03/02/2016 12:45
Di-n-octyl Phthalate	ND	0.28	1.0	2	03/02/2016 12:45
1,2-Diphenylhydrazine	ND	0.32	0.50	2	03/02/2016 12:45
Fluoranthene	ND	0.26	0.50	2	03/02/2016 12:45
Fluorene	ND	0.28	0.50	2	03/02/2016 12:45
Hexachlorobenzene	ND	0.34	0.50	2	03/02/2016 12:45
Hexachlorobutadiene	ND	0.30	0.50	2	03/02/2016 12:45
Hexachlorocyclopentadiene	ND	1.5	2.6	2	03/02/2016 12:45
Hexachloroethane	ND	0.28	0.50	2	03/02/2016 12:45
Indeno (1,2,3-cd) pyrene	ND	0.28	0.50	2	03/02/2016 12:45
Isophorone	ND	0.24	0.50	2	03/02/2016 12:45
2-Methylnaphthalene	ND	0.28	0.50	2	03/02/2016 12:45
2-Methylphenol (o-Cresol)	ND	0.28	0.50	2	03/02/2016 12:45
3 & 4-Methylphenol (m,p-Cresol)	ND	0.24	0.50	2	03/02/2016 12:45
Naphthalene	ND	0.26	0.50	2	03/02/2016 12:45
2-Nitroaniline	ND	1.2	2.6	2	03/02/2016 12:45
3-Nitroaniline	ND	1.2	2.6	2	03/02/2016 12:45
4-Nitroaniline	ND	1.1	2.6	2	03/02/2016 12:45
Nitrobenzene	ND	0.28	2.6	2	03/02/2016 12:45
2-Nitrophenol	ND	1.3	2.6	2	03/02/2016 12:45
4-Nitrophenol	ND	0.82	2.6	2	03/02/2016 12:45
N-Nitrosodiphenylamine	ND	0.32	0.50	2	03/02/2016 12:45
N-Nitrosodi-n-propylamine	ND	0.26	0.50	2	03/02/2016 12:45
Pentachlorophenol	ND	0.12	2.6	2	03/02/2016 12:45
Phenanthrene	ND	0.28	0.50	2	03/02/2016 12:45
Phenol	ND	0.24	0.50	2	03/02/2016 12:45
Pyrene	ND	0.26	0.50	2	03/02/2016 12:45
1,2,4-Trichlorobenzene	ND	0.28	0.50	2	03/02/2016 12:45
2,4,5-Trichlorophenol	ND	0.24	0.50	2	03/02/2016 12:45
2,4,6-Trichlorophenol	ND	0.28	0.50	2	03/02/2016 12:45

(Cont.)

McCampbell Analytical, Inc.
"When Quality Counts"

1534 Willow Pass Road, Pittsburg, CA 94565-1701
Toll Free Telephone: (877) 252-9262 / Fax: (925) 252-9269
http://www.mccampbell.com / E-mail: main@mccampbell.com

Analytical Report

Client:	AEW Engineering, Inc.	**WorkOrder:**	1602A52
Date Received:	2/25/16 16:16	**Extraction Method:**	SW3550B/3640A
Date Prepared:	2/26/16	**Analytical Method:**	SW8270C
Project:	2015-29; Sausalito Gate 5 Characterization	**Unit:**	mg/Kg

Semi-Volatile Organics by GC/MS (Basic Target List) w/ GPC Clean Up

Client ID	Lab ID	Matrix	Date Collected	Instrument	Batch ID
COMP AEW-B12,B14 2.5-5'	**1602A52-013A**	**Soil**	**02/25/2016**	**GC17**	**117280**

Analytes	Result	MDL	RL	DF	Date Analyzed
Surrogates	**REC (%)**		**Limits**		
2-Fluorophenol	79		30-130		03/02/2016 12:45
Phenol-d5	75		30-130		03/02/2016 12:45
Nitrobenzene-d5	69		30-130		03/02/2016 12:45
2-Fluorobiphenyl	62		30-130		03/02/2016 12:45
2,4,6-Tribromophenol	44		10-130		03/02/2016 12:45
4-Terphenyl-d14	76		30-130		03/02/2016 12:45

Analyst(s): REB Analytical Comments: a3

(Cont.)

McCampbell Analytical, Inc.
"When Quality Counts"

1534 Willow Pass Road, Pittsburg, CA 94565-1701
Toll Free Telephone: (877) 252-9262 / Fax: (925) 252-9269
http://www.mccampbell.com / E-mail: main@mccampbell.com

Analytical Report

Client:	AEW Engineering, Inc.	**WorkOrder:**	1602A52
Date Received:	2/25/16 16:16	**Extraction Method:**	SW3550B/3640A
Date Prepared:	2/26/16	**Analytical Method:**	SW8270C
Project:	2015-29; Sausalito Gate 5 Characterization	**Unit:**	mg/Kg

Semi-Volatile Organics by GC/MS (Basic Target List) w/ GPC Clean Up

Client ID	Lab ID	Matrix	Date Collected	Instrument	Batch ID
COMP AEW-B12,B14 10-15'	**1602A52-014A**	**Soil**	**02/25/2016**	**GC17**	**117280**

Analytes	Result	MDL	RL	DF	Date Analyzed
Acenaphthene	ND	0.14	0.25	1	03/01/2016 13:14
Acenaphthylene	ND	0.14	0.25	1	03/01/2016 13:14
Acetochlor	ND	0.25	0.25	1	03/01/2016 13:14
Anthracene	ND	0.14	0.25	1	03/01/2016 13:14
Benzidine	ND	0.23	1.3	1	03/01/2016 13:14
Benzo (a) anthracene	ND	0.14	0.25	1	03/01/2016 13:14
Benzo (b) fluoranthene	ND	0.14	0.25	1	03/01/2016 13:14
Benzo (k) fluoranthene	ND	0.16	0.25	1	03/01/2016 13:14
Benzo (g,h,i) perylene	ND	0.15	0.25	1	03/01/2016 13:14
Benzo (a) pyrene	ND	0.14	0.25	1	03/01/2016 13:14
Benzyl Alcohol	ND	0.51	1.3	1	03/01/2016 13:14
1,1-Biphenyl	ND	0.15	0.25	1	03/01/2016 13:14
Bis (2-chloroethoxy) Methane	ND	0.14	0.25	1	03/01/2016 13:14
Bis (2-chloroethyl) Ether	ND	0.13	0.25	1	03/01/2016 13:14
Bis (2-chloroisopropyl) Ether	ND	0.12	0.25	1	03/01/2016 13:14
Bis (2-ethylhexyl) Adipate	ND	0.25	0.25	1	03/01/2016 13:14
Bis (2-ethylhexyl) Phthalate	ND	0.13	0.25	1	03/01/2016 13:14
4-Bromophenyl Phenyl Ether	ND	0.16	0.25	1	03/01/2016 13:14
Butylbenzyl Phthalate	ND	0.13	0.25	1	03/01/2016 13:14
4-Chloroaniline	ND	0.13	0.25	1	03/01/2016 13:14
4-Chloro-3-methylphenol	ND	0.12	0.25	1	03/01/2016 13:14
2-Chloronaphthalene	ND	0.16	0.25	1	03/01/2016 13:14
2-Chlorophenol	ND	0.14	0.25	1	03/01/2016 13:14
4-Chlorophenyl Phenyl Ether	ND	0.15	0.25	1	03/01/2016 13:14
Chrysene	ND	0.14	0.25	1	03/01/2016 13:14
Dibenzo (a,h) anthracene	ND	0.16	0.25	1	03/01/2016 13:14
Dibenzofuran	ND	0.13	0.25	1	03/01/2016 13:14
Di-n-butyl Phthalate	ND	0.13	0.25	1	03/01/2016 13:14
1,2-Dichlorobenzene	ND	0.12	0.25	1	03/01/2016 13:14
1,3-Dichlorobenzene	ND	0.14	0.25	1	03/01/2016 13:14
1,4-Dichlorobenzene	ND	0.13	0.25	1	03/01/2016 13:14
3,3-Dichlorobenzidine	ND	0.12	0.50	1	03/01/2016 13:14
2,4-Dichlorophenol	ND	0.13	0.25	1	03/01/2016 13:14
Diethyl Phthalate	ND	0.14	0.25	1	03/01/2016 13:14
2,4-Dimethylphenol	**0.63**	0.13	0.25	1	03/01/2016 13:14
Dimethyl Phthalate	ND	0.14	0.25	1	03/01/2016 13:14
4,6-Dinitro-2-methylphenol	ND	0.13	1.3	1	03/01/2016 13:14

(Cont.)

McCampbell Analytical, Inc.
"When Quality Counts"

1534 Willow Pass Road, Pittsburg, CA 94565-1701
Toll Free Telephone: (877) 252-9262 / Fax: (925) 252-9269
http://www.mccampbell.com / E-mail: main@mccampbell.com

Analytical Report

Client:	AEW Engineering, Inc.	**WorkOrder:**	1602A52
Date Received:	2/25/16 16:16	**Extraction Method:**	SW3550B/3640A
Date Prepared:	2/26/16	**Analytical Method:**	SW8270C
Project:	2015-29; Sausalito Gate 5 Characterization	**Unit:**	mg/Kg

Semi-Volatile Organics by GC/MS (Basic Target List) w/ GPC Clean Up

Client ID	Lab ID	Matrix	Date Collected	Instrument	Batch ID
COMP AEW-B12,B14 10-15'	**1602A52-014A**	**Soil**	**02/25/2016**	**GC17**	**117280**

Analytes	Result	MDL	RL	DF	Date Analyzed
2,4-Dinitrophenol	ND	1.3	6.3	1	03/01/2016 13:14
2,4-Dinitrotoluene	ND	0.13	0.25	1	03/01/2016 13:14
2,6-Dinitrotoluene	ND	0.14	0.25	1	03/01/2016 13:14
Di-n-octyl Phthalate	ND	0.14	0.50	1	03/01/2016 13:14
1,2-Diphenylhydrazine	ND	0.16	0.25	1	03/01/2016 13:14
Fluoranthene	ND	0.13	0.25	1	03/01/2016 13:14
Fluorene	ND	0.14	0.25	1	03/01/2016 13:14
Hexachlorobenzene	ND	0.17	0.25	1	03/01/2016 13:14
Hexachlorobutadiene	ND	0.15	0.25	1	03/01/2016 13:14
Hexachlorocyclopentadiene	ND	0.73	1.3	1	03/01/2016 13:14
Hexachloroethane	ND	0.14	0.25	1	03/01/2016 13:14
Indeno (1,2,3-cd) pyrene	ND	0.14	0.25	1	03/01/2016 13:14
Isophorone	ND	0.12	0.25	1	03/01/2016 13:14
2-Methylnaphthalene	ND	0.14	0.25	1	03/01/2016 13:14
2-Methylphenol (o-Cresol)	ND	0.14	0.25	1	03/01/2016 13:14
3 & 4-Methylphenol (m,p-Cresol)	ND	0.12	0.25	1	03/01/2016 13:14
Naphthalene	**0.92**	0.13	0.25	1	03/01/2016 13:14
2-Nitroaniline	ND	0.62	1.3	1	03/01/2016 13:14
3-Nitroaniline	ND	0.59	1.3	1	03/01/2016 13:14
4-Nitroaniline	ND	0.55	1.3	1	03/01/2016 13:14
Nitrobenzene	ND	0.14	1.3	1	03/01/2016 13:14
2-Nitrophenol	ND	0.64	1.3	1	03/01/2016 13:14
4-Nitrophenol	ND	0.41	1.3	1	03/01/2016 13:14
N-Nitrosodiphenylamine	ND	0.16	0.25	1	03/01/2016 13:14
N-Nitrosodi-n-propylamine	ND	0.13	0.25	1	03/01/2016 13:14
Pentachlorophenol	ND	0.061	1.3	1	03/01/2016 13:14
Phenanthrene	ND	0.14	0.25	1	03/01/2016 13:14
Phenol	ND	0.12	0.25	1	03/01/2016 13:14
Pyrene	ND	0.13	0.25	1	03/01/2016 13:14
1,2,4-Trichlorobenzene	ND	0.14	0.25	1	03/01/2016 13:14
2,4,5-Trichlorophenol	ND	0.12	0.25	1	03/01/2016 13:14
2,4,6-Trichlorophenol	ND	0.14	0.25	1	03/01/2016 13:14

(Cont.)

McCampbell Analytical, Inc.
"When Quality Counts"

1534 Willow Pass Road, Pittsburg, CA 94565-1701
Toll Free Telephone: (877) 252-9262 / Fax: (925) 252-9269
http://www.mccampbell.com / E-mail: main@mccampbell.com

Analytical Report

Client:	AEW Engineering, Inc.	**WorkOrder:**	1602A52
Date Received:	2/25/16 16:16	**Extraction Method:**	SW3550B/3640A
Date Prepared:	2/26/16	**Analytical Method:**	SW8270C
Project:	2015-29; Sausalito Gate 5 Characterization	**Unit:**	mg/Kg

Semi-Volatile Organics by GC/MS (Basic Target List) w/ GPC Clean Up

Client ID	Lab ID	Matrix	Date Collected	Instrument	Batch ID
COMP AEW-B12,B14 10-15'	**1602A52-014A**	**Soil**	**02/25/2016**	**GC17**	**117280**

Analytes	Result	MDL	RL	DF	Date Analyzed
Surrogates	REC (%)		Limits		
2-Fluorophenol	94		30-130		03/01/2016 13:14
Phenol-d5	89		30-130		03/01/2016 13:14
Nitrobenzene-d5	83		30-130		03/01/2016 13:14
2-Fluorobiphenyl	79		30-130		03/01/2016 13:14
2,4,6-Tribromophenol	45		10-130		03/01/2016 13:14
4-Terphenyl-d14	91		30-130		03/01/2016 13:14

Analyst(s): REB

McCampbell Analytical, Inc.
"When Quality Counts"

1534 Willow Pass Road, Pittsburg, CA 94565-1701
Toll Free Telephone: (877) 252-9262 / Fax: (925) 252-9269
http://www.mccampbell.com / E-mail: main@mccampbell.com

Analytical Report

Client:	AEW Engineering, Inc.	**WorkOrder:**	1602A52
Date Received:	2/25/16 16:16	**Extraction Method:**	SW3050B
Date Prepared:	2/25/16	**Analytical Method:**	SW6020
Project:	2015-29; Sausalito Gate 5 Characterization	**Unit:**	mg/Kg

CAM / CCR 17 Metals

Client ID	Lab ID	Matrix	Date Collected	Instrument	Batch ID
COMP AEW-B1,B2 2.5-5'	1602A52-001A	Soil	02/24/2016	ICP-MS3	117203

Analytes	Result	RL	DF	Date Analyzed
Antimony	**0.84**	0.50	1	02/26/2016 15:13
Arsenic	**10**	0.50	1	02/26/2016 15:13
Barium	**350**	5.0	1	02/26/2016 15:13
Beryllium	**0.88**	0.50	1	02/26/2016 15:13
Cadmium	ND	0.25	1	02/26/2016 15:13
Chromium	**64**	0.50	1	02/26/2016 15:13
Cobalt	**16**	0.50	1	02/26/2016 15:13
Copper	**54**	0.50	1	02/26/2016 15:13
Lead	**22**	0.50	1	02/26/2016 15:13
Mercury	**0.47**	0.050	1	02/26/2016 15:13
Molybdenum	**1.2**	0.50	1	02/26/2016 15:13
Nickel	**96**	0.50	1	02/26/2016 15:13
Selenium	ND	0.50	1	02/26/2016 15:13
Silver	ND	0.50	1	02/26/2016 15:13
Thallium	ND	0.50	1	02/26/2016 15:13
Vanadium	**55**	0.50	1	02/26/2016 15:13
Zinc	**91**	5.0	1	02/26/2016 15:13

Surrogates	REC (%)	Limits	
Terbium	101	70-130	02/26/2016 15:13

Analyst(s): DVH

(Cont.)

McCampbell Analytical, Inc.
"When Quality Counts"

1534 Willow Pass Road, Pittsburg, CA 94565-1701
Toll Free Telephone: (877) 252-9262 / Fax: (925) 252-9269
http://www.mccampbell.com / E-mail: main@mccampbell.com

Analytical Report

Client:	AEW Engineering, Inc.	**WorkOrder:**	1602A52
Date Received:	2/25/16 16:16	**Extraction Method:**	SW3050B
Date Prepared:	2/25/16	**Analytical Method:**	SW6020
Project:	2015-29; Sausalito Gate 5 Characterization	**Unit:**	mg/Kg

CAM / CCR 17 Metals

Client ID	Lab ID	Matrix	Date Collected	Instrument	Batch ID
COMP AEW-B1,B2 10-15'	1602A52-002A	Soil	02/24/2016	ICP-MS3	117203

Analytes	Result	RL	DF	Date Analyzed
Antimony	**1.6**	0.50	1	02/26/2016 15:19
Arsenic	**5.5**	0.50	1	02/26/2016 15:19
Barium	**150**	5.0	1	02/26/2016 15:19
Beryllium	**0.62**	0.50	1	02/26/2016 15:19
Cadmium	ND	0.25	1	02/26/2016 15:19
Chromium	**66**	0.50	1	02/26/2016 15:19
Cobalt	**24**	0.50	1	02/26/2016 15:19
Copper	**34**	0.50	1	02/26/2016 15:19
Lead	**39**	0.50	1	02/26/2016 15:19
Mercury	**0.12**	0.050	1	02/26/2016 15:19
Molybdenum	**0.59**	0.50	1	02/26/2016 15:19
Nickel	**120**	0.50	1	02/26/2016 15:19
Selenium	ND	0.50	1	02/26/2016 15:19
Silver	ND	0.50	1	02/26/2016 15:19
Thallium	ND	0.50	1	02/26/2016 15:19
Vanadium	**41**	0.50	1	02/26/2016 15:19
Zinc	**66**	5.0	1	02/26/2016 15:19

Surrogates	REC (%)	Limits	
Terbium	106	70-130	02/26/2016 15:19

Analyst(s): DVH

(Cont.)

McCampbell Analytical, Inc.
"When Quality Counts"

1534 Willow Pass Road, Pittsburg, CA 94565-1701
Toll Free Telephone: (877) 252-9262 / Fax: (925) 252-9269
http://www.mccampbell.com / E-mail: main@mccampbell.com

Analytical Report

Client:	AEW Engineering, Inc.	**WorkOrder:**	1602A52
Date Received:	2/25/16 16:16	**Extraction Method:**	SW3050B
Date Prepared:	2/25/16	**Analytical Method:**	SW6020
Project:	2015-29; Sausalito Gate 5 Characterization	**Unit:**	mg/Kg

CAM / CCR 17 Metals

Client ID	Lab ID	Matrix	Date Collected	Instrument	Batch ID
COMP AEW-B3,B4 2.5-5'	1602A52-003A	Soil	02/23/2016	ICP-MS3	117203

Analytes	Result	RL	DF	Date Analyzed
Antimony	**1.2**	0.50	1	02/26/2016 15:25
Arsenic	**5.7**	0.50	1	02/26/2016 15:25
Barium	**150**	5.0	1	02/26/2016 15:25
Beryllium	**0.56**	0.50	1	02/26/2016 15:25
Cadmium	ND	0.25	1	02/26/2016 15:25
Chromium	**35**	0.50	1	02/26/2016 15:25
Cobalt	**12**	0.50	1	02/26/2016 15:25
Copper	**31**	0.50	1	02/26/2016 15:25
Lead	**42**	0.50	1	02/26/2016 15:25
Mercury	**0.18**	0.050	1	02/26/2016 15:25
Molybdenum	**0.97**	0.50	1	02/26/2016 15:25
Nickel	**40**	0.50	1	02/26/2016 15:25
Selenium	ND	0.50	1	02/26/2016 15:25
Silver	ND	0.50	1	02/26/2016 15:25
Thallium	ND	0.50	1	02/26/2016 15:25
Vanadium	**62**	0.50	1	02/26/2016 15:25
Zinc	**73**	5.0	1	02/26/2016 15:25

Surrogates	REC (%)	Limits	
Terbium	104	70-130	02/26/2016 15:25

Analyst(s): DVH

(Cont.)

CDPH ELAP 1644 ♦ NELAP 4033ORELAP

Angela Rydelius, Lab Manager

McCampbell Analytical, Inc.
"When Quality Counts"

1534 Willow Pass Road, Pittsburg, CA 94565-1701
Toll Free Telephone: (877) 252-9262 / Fax: (925) 252-9269
http://www.mccampbell.com / E-mail: main@mccampbell.com

Analytical Report

Client:	AEW Engineering, Inc.	**WorkOrder:**	1602A52
Date Received:	2/25/16 16:16	**Extraction Method:**	SW3050B
Date Prepared:	2/25/16	**Analytical Method:**	SW6020
Project:	2015-29; Sausalito Gate 5 Characterization	**Unit:**	mg/Kg

CAM / CCR 17 Metals

Client ID	Lab ID	Matrix	Date Collected	Instrument	Batch ID
COMP AEW-B3,4 10-15'	1602A52-004A	Soil	02/23/2016	ICP-MS3	117203

Analytes	Result	RL	DF	Date Analyzed
Antimony	ND	0.50	1	02/26/2016 15:31
Arsenic	**4.9**	0.50	1	02/26/2016 15:31
Barium	**250**	5.0	1	02/26/2016 15:31
Beryllium	**0.76**	0.50	1	02/26/2016 15:31
Cadmium	ND	0.25	1	02/26/2016 15:31
Chromium	**45**	0.50	1	02/26/2016 15:31
Cobalt	**12**	0.50	1	02/26/2016 15:31
Copper	**28**	0.50	1	02/26/2016 15:31
Lead	**21**	0.50	1	02/26/2016 15:31
Mercury	**0.20**	0.050	1	02/26/2016 15:31
Molybdenum	**0.62**	0.50	1	02/26/2016 15:31
Nickel	**58**	0.50	1	02/26/2016 15:31
Selenium	ND	0.50	1	02/26/2016 15:31
Silver	ND	0.50	1	02/26/2016 15:31
Thallium	ND	0.50	1	02/26/2016 15:31
Vanadium	**45**	0.50	1	02/26/2016 15:31
Zinc	**58**	5.0	1	02/26/2016 15:31

Surrogates	REC (%)	Limits	
Terbium	103	70-130	02/26/2016 15:31

Analyst(s): DVH

(Cont.)

McCampbell Analytical, Inc.
"When Quality Counts"

1534 Willow Pass Road, Pittsburg, CA 94565-1701
Toll Free Telephone: (877) 252-9262 / Fax: (925) 252-9269
http://www.mccampbell.com / E-mail: main@mccampbell.com

Analytical Report

Client:	AEW Engineering, Inc.	**WorkOrder:**	1602A52
Date Received:	2/25/16 16:16	**Extraction Method:**	SW3050B
Date Prepared:	2/25/16	**Analytical Method:**	SW6020
Project:	2015-29; Sausalito Gate 5 Characterization	**Unit:**	mg/Kg

CAM / CCR 17 Metals

Client ID	Lab ID	Matrix	Date Collected	Instrument	Batch ID
COMP AEW-B5,B11 2.5-5'	**1602A52-005A**	**Soil**	**02/25/2016**	**ICP-MS3**	**117203**

Analytes	Result	RL	DF	Date Analyzed
Antimony	**1.3**	0.50	1	02/26/2016 15:37
Arsenic	**11**	0.50	1	02/26/2016 15:37
Barium	**330**	5.0	1	02/26/2016 15:37
Beryllium	**0.92**	0.50	1	02/26/2016 15:37
Cadmium	ND	0.25	1	02/26/2016 15:37
Chromium	**76**	0.50	1	02/26/2016 15:37
Cobalt	**16**	0.50	1	02/26/2016 15:37
Copper	**48**	0.50	1	02/26/2016 15:37
Lead	**37**	0.50	1	02/26/2016 15:37
Mercury	**0.18**	0.050	1	02/26/2016 15:37
Molybdenum	**0.88**	0.50	1	02/26/2016 15:37
Nickel	**110**	0.50	1	02/26/2016 15:37
Selenium	ND	0.50	1	02/26/2016 15:37
Silver	ND	0.50	1	02/26/2016 15:37
Thallium	ND	0.50	1	02/26/2016 15:37
Vanadium	**58**	0.50	1	02/26/2016 15:37
Zinc	**93**	5.0	1	02/26/2016 15:37

Surrogates	REC (%)	Limits	
Terbium	100	70-130	02/26/2016 15:37

Analyst(s): DVH

(Cont.)

McCampbell Analytical, Inc.
"When Quality Counts"

1534 Willow Pass Road, Pittsburg, CA 94565-1701
Toll Free Telephone: (877) 252-9262 / Fax: (925) 252-9269
http://www.mccampbell.com / E-mail: main@mccampbell.com

Analytical Report

Client:	AEW Engineering, Inc.	**WorkOrder:**	1602A52
Date Received:	2/25/16 16:16	**Extraction Method:**	SW3050B
Date Prepared:	2/25/16	**Analytical Method:**	SW6020
Project:	2015-29; Sausalito Gate 5 Characterization	**Unit:**	mg/Kg

CAM / CCR 17 Metals

Client ID	Lab ID	Matrix	Date Collected	Instrument	Batch ID
COMP AEW-B5,B11 10-15'	**1602A52-006A**	**Soil**	**02/25/2016**	**ICP-MS3**	**117203**

Analytes	Result	RL	DF	Date Analyzed
Antimony	ND	0.50	1	02/26/2016 15:43
Arsenic	**8.6**	0.50	1	02/26/2016 15:43
Barium	**230**	5.0	1	02/26/2016 15:43
Beryllium	**0.75**	0.50	1	02/26/2016 15:43
Cadmium	ND	0.25	1	02/26/2016 15:43
Chromium	**81**	0.50	1	02/26/2016 15:43
Cobalt	**17**	0.50	1	02/26/2016 15:43
Copper	**38**	0.50	1	02/26/2016 15:43
Lead	**12**	0.50	1	02/26/2016 15:43
Mercury	**0.12**	0.050	1	02/26/2016 15:43
Molybdenum	**1.4**	0.50	1	02/26/2016 15:43
Nickel	**110**	0.50	1	02/26/2016 15:43
Selenium	ND	0.50	1	02/26/2016 15:43
Silver	ND	0.50	1	02/26/2016 15:43
Thallium	ND	0.50	1	02/26/2016 15:43
Vanadium	**77**	0.50	1	02/26/2016 15:43
Zinc	**82**	5.0	1	02/26/2016 15:43

Surrogates	REC (%)	Limits	
Terbium	104	70-130	02/26/2016 15:43

Analyst(s): DVH

(Cont.)

McCampbell Analytical, Inc.
"When Quality Counts"

1534 Willow Pass Road, Pittsburg, CA 94565-1701
Toll Free Telephone: (877) 252-9262 / Fax: (925) 252-9269
http://www.mccampbell.com / E-mail: main@mccampbell.com

Analytical Report

Client:	AEW Engineering, Inc.	**WorkOrder:**	1602A52
Date Received:	2/25/16 16:16	**Extraction Method:**	SW3050B
Date Prepared:	2/25/16	**Analytical Method:**	SW6020
Project:	2015-29; Sausalito Gate 5 Characterization	**Unit:**	mg/Kg

CAM / CCR 17 Metals

Client ID	Lab ID	Matrix	Date Collected	Instrument	Batch ID
COMP AEW-B6,B7 2.5-5'	1602A52-007A	Soil	02/24/2016	ICP-MS3	117203

Analytes	Result	RL	DF	Date Analyzed
Antimony	**0.58**	0.50	1	02/26/2016 15:49
Arsenic	**9.7**	0.50	1	02/26/2016 15:49
Barium	**240**	5.0	1	02/26/2016 15:49
Beryllium	**0.90**	0.50	1	02/26/2016 15:49
Cadmium	ND	0.25	1	02/26/2016 15:49
Chromium	**83**	0.50	1	02/26/2016 15:49
Cobalt	**15**	0.50	1	02/26/2016 15:49
Copper	**38**	0.50	1	02/26/2016 15:49
Lead	**26**	0.50	1	02/26/2016 15:49
Mercury	**0.15**	0.050	1	02/26/2016 15:49
Molybdenum	**1.1**	0.50	1	02/26/2016 15:49
Nickel	**120**	0.50	1	02/26/2016 15:49
Selenium	ND	0.50	1	02/26/2016 15:49
Silver	ND	0.50	1	02/26/2016 15:49
Thallium	ND	0.50	1	02/26/2016 15:49
Vanadium	**50**	0.50	1	02/26/2016 15:49
Zinc	**82**	5.0	1	02/26/2016 15:49

Surrogates	REC (%)	Limits	
Terbium	106	70-130	02/26/2016 15:49

Analyst(s): DVH

(Cont.)

McCampbell Analytical, Inc.
"When Quality Counts"

1534 Willow Pass Road, Pittsburg, CA 94565-1701
Toll Free Telephone: (877) 252-9262 / Fax: (925) 252-9269
http://www.mccampbell.com / E-mail: main@mccampbell.com

Analytical Report

Client:	AEW Engineering, Inc.	**WorkOrder:**	1602A52
Date Received:	2/25/16 16:16	**Extraction Method:**	SW3050B
Date Prepared:	2/25/16	**Analytical Method:**	SW6020
Project:	2015-29; Sausalito Gate 5 Characterization	**Unit:**	mg/Kg

CAM / CCR 17 Metals

Client ID	Lab ID	Matrix	Date Collected	Instrument	Batch ID
COMP AEW-B6,B7 10-15'	1602A52-008A	Soil	02/24/2016	ICP-MS3	117203

Analytes	Result	RL	DF	Date Analyzed
Antimony	**0.72**	0.50	1	02/26/2016 15:55
Arsenic	**9.4**	0.50	1	02/26/2016 15:55
Barium	**370**	5.0	1	02/26/2016 15:55
Beryllium	**0.91**	0.50	1	02/26/2016 15:55
Cadmium	ND	0.25	1	02/26/2016 15:55
Chromium	**130**	0.50	1	02/26/2016 15:55
Cobalt	**19**	0.50	1	02/26/2016 15:55
Copper	**50**	0.50	1	02/26/2016 15:55
Lead	**21**	0.50	1	02/26/2016 15:55
Mercury	**0.17**	0.050	1	02/26/2016 15:55
Molybdenum	**0.87**	0.50	1	02/26/2016 15:55
Nickel	**170**	0.50	1	02/26/2016 15:55
Selenium	ND	0.50	1	02/26/2016 15:55
Silver	ND	0.50	1	02/26/2016 15:55
Thallium	ND	0.50	1	02/26/2016 15:55
Vanadium	**65**	0.50	1	02/26/2016 15:55
Zinc	**100**	5.0	1	02/26/2016 15:55

Surrogates	REC (%)	Limits	
Terbium	108	70-130	02/26/2016 15:55

Analyst(s): DVH

(Cont.)

McCampbell Analytical, Inc.
"When Quality Counts"

1534 Willow Pass Road, Pittsburg, CA 94565-1701
Toll Free Telephone: (877) 252-9262 / Fax: (925) 252-9269
http://www.mccampbell.com / E-mail: main@mccampbell.com

Analytical Report

Client:	AEW Engineering, Inc.	**WorkOrder:**	1602A52
Date Received:	2/25/16 16:16	**Extraction Method:**	SW3050B
Date Prepared:	2/25/16	**Analytical Method:**	SW6020
Project:	2015-29; Sausalito Gate 5 Characterization	**Unit:**	mg/Kg

CAM / CCR 17 Metals

Client ID	Lab ID	Matrix	Date Collected	Instrument	Batch ID
COMP AEW-B8,B9 2.5-5'	1602A52-009A	Soil	02/24/2016	ICP-MS3	117248

Analytes	Result	RL	DF	Date Analyzed
Antimony	**0.65**	0.50	1	02/26/2016 16:02
Arsenic	**6.6**	0.50	1	02/26/2016 16:02
Barium	**280**	5.0	1	02/26/2016 16:02
Beryllium	**0.75**	0.50	1	02/26/2016 16:02
Cadmium	ND	0.25	1	02/26/2016 16:02
Chromium	**45**	0.50	1	02/26/2016 16:02
Cobalt	**15**	0.50	1	02/26/2016 16:02
Copper	**40**	0.50	1	02/26/2016 16:02
Lead	**14**	0.50	1	02/26/2016 16:02
Mercury	**0.22**	0.050	1	02/26/2016 16:02
Molybdenum	**1.4**	0.50	1	02/26/2016 16:02
Nickel	**59**	0.50	1	02/26/2016 16:02
Selenium	ND	0.50	1	02/26/2016 16:02
Silver	ND	0.50	1	02/26/2016 16:02
Thallium	ND	0.50	1	02/26/2016 16:02
Vanadium	**44**	0.50	1	02/26/2016 16:02
Zinc	**64**	5.0	1	02/26/2016 16:02

Surrogates	REC (%)	Limits	
Terbium	110	70-130	02/26/2016 16:02

Analyst(s): DVH

(Cont.)

CDPH ELAP 1644 ♦ NELAP 4033ORELAP

Angela Rydelius, Lab Manager

McCampbell Analytical, Inc.
"When Quality Counts"

1534 Willow Pass Road, Pittsburg, CA 94565-1701
Toll Free Telephone: (877) 252-9262 / Fax: (925) 252-9269
http://www.mccampbell.com / E-mail: main@mccampbell.com

Analytical Report

Client:	AEW Engineering, Inc.	**WorkOrder:**	1602A52
Date Received:	2/25/16 16:16	**Extraction Method:**	SW3050B
Date Prepared:	2/25/16	**Analytical Method:**	SW6020
Project:	2015-29; Sausalito Gate 5 Characterization	**Unit:**	mg/Kg

CAM / CCR 17 Metals

Client ID	Lab ID	Matrix	Date Collected	Instrument	Batch ID
COMP AEW-B8,B9 10-15'	1602A52-010A	Soil	02/24/2016	ICP-MS3	117248

Analytes	Result	RL	DF	Date Analyzed
Antimony	ND	0.50	1	02/26/2016 16:08
Arsenic	**9.1**	0.50	1	02/26/2016 16:08
Barium	**220**	5.0	1	02/26/2016 16:08
Beryllium	**0.73**	0.50	1	02/26/2016 16:08
Cadmium	ND	0.25	1	02/26/2016 16:08
Chromium	**140**	0.50	1	02/26/2016 16:08
Cobalt	**20**	0.50	1	02/26/2016 16:08
Copper	**38**	0.50	1	02/26/2016 16:08
Lead	**16**	0.50	1	02/26/2016 16:08
Mercury	**0.12**	0.050	1	02/26/2016 16:08
Molybdenum	**0.53**	0.50	1	02/26/2016 16:08
Nickel	**200**	0.50	1	02/26/2016 16:08
Selenium	ND	0.50	1	02/26/2016 16:08
Silver	ND	0.50	1	02/26/2016 16:08
Thallium	ND	0.50	1	02/26/2016 16:08
Vanadium	**63**	0.50	1	02/26/2016 16:08
Zinc	**79**	5.0	1	02/26/2016 16:08

Surrogates	REC (%)	Limits	
Terbium	113	70-130	02/26/2016 16:08

Analyst(s): DVH

(Cont.)

CDPH ELAP 1644 ♦ NELAP 4033ORELAP

Angela Rydelius, Lab Manager

McCampbell Analytical, Inc.
"When Quality Counts"

1534 Willow Pass Road, Pittsburg, CA 94565-1701
Toll Free Telephone: (877) 252-9262 / Fax: (925) 252-9269
http://www.mccampbell.com / E-mail: main@mccampbell.com

Analytical Report

Client:	AEW Engineering, Inc.	**WorkOrder:**	1602A52
Date Received:	2/25/16 16:16	**Extraction Method:**	SW3050B
Date Prepared:	2/25/16	**Analytical Method:**	SW6020
Project:	2015-29; Sausalito Gate 5 Characterization	**Unit:**	mg/Kg

CAM / CCR 17 Metals

Client ID	Lab ID	Matrix	Date Collected	Instrument	Batch ID
COMP AEW-B10,B13 2.5-5'	1602A52-011A	Soil	02/25/2016	ICP-MS3	117248

Analytes	Result	RL	DF	Date Analyzed
Antimony	**1.4**	0.50	1	02/26/2016 16:26
Arsenic	**8.1**	0.50	1	02/26/2016 16:26
Barium	**520**	5.0	1	02/26/2016 16:26
Beryllium	**0.68**	0.50	1	02/26/2016 16:26
Cadmium	ND	0.25	1	02/26/2016 16:26
Chromium	**56**	0.50	1	02/26/2016 16:26
Cobalt	**15**	0.50	1	02/26/2016 16:26
Copper	**49**	0.50	1	02/26/2016 16:26
Lead	**37**	0.50	1	02/26/2016 16:26
Mercury	**0.37**	0.050	1	02/26/2016 16:26
Molybdenum	**0.92**	0.50	1	02/26/2016 16:26
Nickel	**65**	0.50	1	02/26/2016 16:26
Selenium	ND	0.50	1	02/26/2016 16:26
Silver	ND	0.50	1	02/26/2016 16:26
Thallium	ND	0.50	1	02/26/2016 16:26
Vanadium	**54**	0.50	1	02/26/2016 16:26
Zinc	**71**	5.0	1	02/26/2016 16:26

Surrogates	REC (%)	Limits	
Terbium	105	70-130	02/26/2016 16:26

Analyst(s): AC

(Cont.)

CDPH ELAP 1644 ♦ NELAP 4033ORELAP

Angela Rydelius, Lab Manager

McCampbell Analytical, Inc.
"When Quality Counts"

1534 Willow Pass Road, Pittsburg, CA 94565-1701
Toll Free Telephone: (877) 252-9262 / Fax: (925) 252-9269
http://www.mccampbell.com / E-mail: main@mccampbell.com

Analytical Report

Client:	AEW Engineering, Inc.	**WorkOrder:**	1602A52
Date Received:	2/25/16 16:16	**Extraction Method:**	SW3050B
Date Prepared:	2/25/16	**Analytical Method:**	SW6020
Project:	2015-29; Sausalito Gate 5 Characterization	**Unit:**	mg/Kg

CAM / CCR 17 Metals

Client ID	Lab ID	Matrix	Date Collected	Instrument	Batch ID
COMP AEW-B10,B13 10-15'	1602A52-012A	Soil	02/25/2016	ICP-MS3	117248

Analytes	Result	RL	DF	Date Analyzed
Antimony	**0.83**	0.50	1	02/26/2016 16:32
Arsenic	**15**	0.50	1	02/26/2016 16:32
Barium	**260**	5.0	1	02/26/2016 16:32
Beryllium	**0.90**	0.50	1	02/26/2016 16:32
Cadmium	ND	0.25	1	02/26/2016 16:32
Chromium	**110**	0.50	1	02/26/2016 16:32
Cobalt	**23**	0.50	1	02/26/2016 16:32
Copper	**58**	0.50	1	02/26/2016 16:32
Lead	**17**	0.50	1	02/26/2016 16:32
Mercury	**0.10**	0.050	1	02/26/2016 16:32
Molybdenum	**2.3**	0.50	1	02/26/2016 16:32
Nickel	**150**	0.50	1	02/26/2016 16:32
Selenium	ND	0.50	1	02/26/2016 16:32
Silver	ND	0.50	1	02/26/2016 16:32
Thallium	ND	0.50	1	02/26/2016 16:32
Vanadium	**62**	0.50	1	02/26/2016 16:32
Zinc	**110**	5.0	1	02/26/2016 16:32

Surrogates	REC (%)	Limits	
Terbium	104	70-130	02/26/2016 16:32

Analyst(s): AC

(Cont.)

CDPH ELAP 1644 ♦ NELAP 4033ORELAP

Angela Rydelius, Lab Manager

McCampbell Analytical, Inc.
"When Quality Counts"

1534 Willow Pass Road, Pittsburg, CA 94565-1701
Toll Free Telephone: (877) 252-9262 / Fax: (925) 252-9269
http://www.mccampbell.com / E-mail: main@mccampbell.com

Analytical Report

Client:	AEW Engineering, Inc.	**WorkOrder:**	1602A52
Date Received:	2/25/16 16:16	**Extraction Method:**	SW3050B
Date Prepared:	2/25/16	**Analytical Method:**	SW6020
Project:	2015-29; Sausalito Gate 5 Characterization	**Unit:**	mg/Kg

CAM / CCR 17 Metals

Client ID	Lab ID	Matrix	Date Collected	Instrument	Batch ID
COMP AEW-B12,B14 2.5-5'	1602A52-013A	Soil	02/25/2016	ICP-MS3	117248

Analytes	Result	RL	DF	Date Analyzed
Antimony	**0.65**	0.50	1	02/26/2016 16:38
Arsenic	**12**	0.50	1	02/26/2016 16:38
Barium	**160**	5.0	1	02/26/2016 16:38
Beryllium	**0.71**	0.50	1	02/26/2016 16:38
Cadmium	ND	0.25	1	02/26/2016 16:38
Chromium	**46**	0.50	1	02/26/2016 16:38
Cobalt	**14**	0.50	1	02/26/2016 16:38
Copper	**46**	0.50	1	02/26/2016 16:38
Lead	**23**	0.50	1	02/26/2016 16:38
Mercury	**0.16**	0.050	1	02/26/2016 16:38
Molybdenum	**0.80**	0.50	1	02/26/2016 16:38
Nickel	**59**	0.50	1	02/26/2016 16:38
Selenium	ND	0.50	1	02/26/2016 16:38
Silver	ND	0.50	1	02/26/2016 16:38
Thallium	ND	0.50	1	02/26/2016 16:38
Vanadium	**44**	0.50	1	02/26/2016 16:38
Zinc	**100**	5.0	1	02/26/2016 16:38

Surrogates	REC (%)	Limits	
Terbium	104	70-130	02/26/2016 16:38

Analyst(s): AC

(Cont.)

McCampbell Analytical, Inc.
"When Quality Counts"

1534 Willow Pass Road, Pittsburg, CA 94565-1701
Toll Free Telephone: (877) 252-9262 / Fax: (925) 252-9269
http://www.mccampbell.com / E-mail: main@mccampbell.com

Analytical Report

Client:	AEW Engineering, Inc.	**WorkOrder:**	1602A52
Date Received:	2/25/16 16:16	**Extraction Method:**	SW3050B
Date Prepared:	2/25/16	**Analytical Method:**	SW6020
Project:	2015-29; Sausalito Gate 5 Characterization	**Unit:**	mg/Kg

CAM / CCR 17 Metals

Client ID	Lab ID	Matrix	Date Collected	Instrument	Batch ID
COMP AEW-B12,B14 10-15'	**1602A52-014A**	**Soil**	**02/25/2016**	**ICP-MS1**	**117248**

Analytes	Result	RL	DF	Date Analyzed
Antimony	ND	0.50	1	02/26/2016 13:09
Arsenic	**12**	0.50	1	02/26/2016 13:09
Barium	**110**	5.0	1	02/26/2016 13:09
Beryllium	**0.58**	0.50	1	02/26/2016 13:09
Cadmium	ND	0.25	1	02/26/2016 13:09
Chromium	**62**	0.50	1	02/26/2016 13:09
Cobalt	**13**	0.50	1	02/26/2016 13:09
Copper	**30**	0.50	1	02/26/2016 13:09
Lead	**9.9**	0.50	1	02/26/2016 13:09
Mercury	**0.058**	0.050	1	02/26/2016 13:09
Molybdenum	**4.2**	0.50	1	02/26/2016 13:09
Nickel	**73**	0.50	1	02/26/2016 13:09
Selenium	ND	0.50	1	02/26/2016 13:09
Silver	ND	0.50	1	02/26/2016 13:09
Thallium	ND	0.50	1	02/26/2016 13:09
Vanadium	**40**	0.50	1	02/26/2016 13:09
Zinc	**65**	5.0	1	02/26/2016 13:09

Surrogates	REC (%)	Limits	
Terbium	102	70-130	02/26/2016 13:09

Analyst(s): AC

McCampbell Analytical, Inc.
"When Quality Counts"

1534 Willow Pass Road, Pittsburg, CA 94565-1701
Toll Free Telephone: (877) 252-9262 / Fax: (925) 252-9269
http://www.mccampbell.com / E-mail: main@mccampbell.com

Analytical Report

Client:	AEW Engineering, Inc.	**WorkOrder:**	1602A52
Date Received:	2/25/16 16:16	**Extraction Method:**	SW5030B
Date Prepared:	2/25/16-2/29/16	**Analytical Method:**	SW8021B/8015Bm
Project:	2015-29; Sausalito Gate 5 Characterization	**Unit:**	mg/Kg

Gasoline Range (C6-C12) Volatile Hydrocarbons as Gasoline with BTEX and MTBE

Client ID	Lab ID	Matrix	Date Collected	Instrument	Batch ID
COMP AEW-B1,B2 2.5-5'	**1602A52-001A**	**Soil**	**02/24/2016**	**GC19**	**117236**

Analytes	Result	RL	DF	Date Analyzed
TPH(g)	ND	1.0	1	02/26/2016 20:25
MTBE	ND	0.050	1	02/26/2016 20:25
Benzene	ND	0.0050	1	02/26/2016 20:25
Toluene	ND	0.0050	1	02/26/2016 20:25
Ethylbenzene	ND	0.0050	1	02/26/2016 20:25
Xylenes	ND	0.015	1	02/26/2016 20:25

Surrogates	REC (%)	Limits	
2-Fluorotoluene	111	70-130	02/26/2016 20:25

Analyst(s): IA

Client ID	Lab ID	Matrix	Date Collected	Instrument	Batch ID
COMP AEW-B1,B2 10-15'	**1602A52-002A**	**Soil**	**02/24/2016**	**GC19**	**117236**

Analytes	Result	RL	DF	Date Analyzed
TPH(g)	**2.9**	1.0	1	02/26/2016 20:56
MTBE	ND	0.050	1	02/26/2016 20:56
Benzene	ND	0.0050	1	02/26/2016 20:56
Toluene	ND	0.0050	1	02/26/2016 20:56
Ethylbenzene	ND	0.0050	1	02/26/2016 20:56
Xylenes	ND	0.015	1	02/26/2016 20:56

Surrogates	REC (%)	Limits	
2-Fluorotoluene	106	70-130	02/26/2016 20:56

Analyst(s): IA Analytical Comments: d7

(Cont.)

McCampbell Analytical, Inc.
"When Quality Counts"

1534 Willow Pass Road, Pittsburg, CA 94565-1701
Toll Free Telephone: (877) 252-9262 / Fax: (925) 252-9269
http://www.mccampbell.com / E-mail: main@mccampbell.com

Analytical Report

Client:	AEW Engineering, Inc.	**WorkOrder:**	1602A52
Date Received:	2/25/16 16:16	**Extraction Method:**	SW5030B
Date Prepared:	2/25/16-2/29/16	**Analytical Method:**	SW8021B/8015Bm
Project:	2015-29; Sausalito Gate 5 Characterization	**Unit:**	mg/Kg

Gasoline Range (C6-C12) Volatile Hydrocarbons as Gasoline with BTEX and MTBE

Client ID	Lab ID	Matrix	Date Collected	Instrument	Batch ID
COMP AEW-B3,B4 2.5-5'	**1602A52-003A**	**Soil**	**02/23/2016**	**GC19**	**117236**

Analytes	Result	RL	DF	Date Analyzed
TPH(g)	**2.5**	1.0	1	02/26/2016 21:27
MTBE	ND	0.050	1	02/26/2016 21:27
Benzene	ND	0.0050	1	02/26/2016 21:27
Toluene	ND	0.0050	1	02/26/2016 21:27
Ethylbenzene	ND	0.0050	1	02/26/2016 21:27
Xylenes	ND	0.015	1	02/26/2016 21:27

Surrogates	REC (%)	Limits	
2-Fluorotoluene	106	70-130	02/26/2016 21:27

Analyst(s): IA Analytical Comments: d7

Client ID	Lab ID	Matrix	Date Collected	Instrument	Batch ID
COMP AEW-B3,4 10-15'	**1602A52-004A**	**Soil**	**02/23/2016**	**GC19**	**117236**

Analytes	Result	RL	DF	Date Analyzed
TPH(g)	ND	1.0	1	02/26/2016 21:57
MTBE	ND	0.050	1	02/26/2016 21:57
Benzene	ND	0.0050	1	02/26/2016 21:57
Toluene	ND	0.0050	1	02/26/2016 21:57
Ethylbenzene	ND	0.0050	1	02/26/2016 21:57
Xylenes	ND	0.015	1	02/26/2016 21:57

Surrogates	REC (%)	Limits	
2-Fluorotoluene	96	70-130	02/26/2016 21:57

Analyst(s): IA

(Cont.)

McCampbell Analytical, Inc.
"When Quality Counts"

1534 Willow Pass Road, Pittsburg, CA 94565-1701
Toll Free Telephone: (877) 252-9262 / Fax: (925) 252-9269
http://www.mccampbell.com / E-mail: main@mccampbell.com

Analytical Report

Client:	AEW Engineering, Inc.	**WorkOrder:**	1602A52
Date Received:	2/25/16 16:16	**Extraction Method:**	SW5030B
Date Prepared:	2/25/16-2/29/16	**Analytical Method:**	SW8021B/8015Bm
Project:	2015-29; Sausalito Gate 5 Characterization	**Unit:**	mg/Kg

Gasoline Range (C6-C12) Volatile Hydrocarbons as Gasoline with BTEX and MTBE

Client ID	Lab ID	Matrix	Date Collected	Instrument	Batch ID
COMP AEW-B5,B11 2.5-5'	**1602A52-005A**	**Soil**	**02/25/2016**	**GC19**	**117236**

Analytes	Result	RL	DF	Date Analyzed
TPH(g)	**7.4**	1.0	1	02/26/2016 22:58
MTBE	ND	0.050	1	02/26/2016 22:58
Benzene	ND	0.0050	1	02/26/2016 22:58
Toluene	ND	0.0050	1	02/26/2016 22:58
Ethylbenzene	ND	0.0050	1	02/26/2016 22:58
Xylenes	**0.019**	0.015	1	02/26/2016 22:58

Surrogates	REC (%)	Limits	
2-Fluorotoluene	100	70-130	02/26/2016 22:58

Analyst(s): IA Analytical Comments: d7

Client ID	Lab ID	Matrix	Date Collected	Instrument	Batch ID
COMP AEW-B5,B11 10-15'	**1602A52-006A**	**Soil**	**02/25/2016**	**GC19**	**117236**

Analytes	Result	RL	DF	Date Analyzed
TPH(g)	ND	1.0	1	02/26/2016 19:24
MTBE	ND	0.050	1	02/26/2016 19:24
Benzene	ND	0.0050	1	02/26/2016 19:24
Toluene	ND	0.0050	1	02/26/2016 19:24
Ethylbenzene	ND	0.0050	1	02/26/2016 19:24
Xylenes	ND	0.015	1	02/26/2016 19:24

Surrogates	REC (%)	Limits	
2-Fluorotoluene	103	70-130	02/26/2016 19:24

Analyst(s): IA

(Cont.)

McCampbell Analytical, Inc.
"When Quality Counts"

1534 Willow Pass Road, Pittsburg, CA 94565-1701
Toll Free Telephone: (877) 252-9262 / Fax: (925) 252-9269
http://www.mccampbell.com / E-mail: main@mccampbell.com

Analytical Report

Client:	AEW Engineering, Inc.	**WorkOrder:**	1602A52
Date Received:	2/25/16 16:16	**Extraction Method:**	SW5030B
Date Prepared:	2/25/16-2/29/16	**Analytical Method:**	SW8021B/8015Bm
Project:	2015-29; Sausalito Gate 5 Characterization	**Unit:**	mg/Kg

Gasoline Range (C6-C12) Volatile Hydrocarbons as Gasoline with BTEX and MTBE

Client ID	Lab ID	Matrix	Date Collected	Instrument	Batch ID
COMP AEW-B6,B7 2.5-5'	**1602A52-007A**	**Soil**	**02/24/2016**	**GC19**	**117357**

Analytes	Result	RL	DF	Date Analyzed
TPH(g)	**1.2**	1.0	1	03/01/2016 17:15
MTBE	ND	0.050	1	03/01/2016 17:15
Benzene	ND	0.0050	1	03/01/2016 17:15
Toluene	ND	0.0050	1	03/01/2016 17:15
Ethylbenzene	ND	0.0050	1	03/01/2016 17:15
Xylenes	ND	0.015	1	03/01/2016 17:15

Surrogates	REC (%)	Limits	
2-Fluorotoluene	98	70-130	03/01/2016 17:15

Analyst(s): IA Analytical Comments: d7

Client ID	Lab ID	Matrix	Date Collected	Instrument	Batch ID
COMP AEW-B6,B7 10-15'	**1602A52-008A**	**Soil**	**02/24/2016**	**GC19**	**117236**

Analytes	Result	RL	DF	Date Analyzed
TPH(g)	ND	1.0	1	02/27/2016 00:30
MTBE	ND	0.050	1	02/27/2016 00:30
Benzene	ND	0.0050	1	02/27/2016 00:30
Toluene	ND	0.0050	1	02/27/2016 00:30
Ethylbenzene	ND	0.0050	1	02/27/2016 00:30
Xylenes	ND	0.015	1	02/27/2016 00:30

Surrogates	REC (%)	Limits	
2-Fluorotoluene	103	70-130	02/27/2016 00:30

Analyst(s): IA

(Cont.)

McCampbell Analytical, Inc.
"When Quality Counts"

1534 Willow Pass Road, Pittsburg, CA 94565-1701
Toll Free Telephone: (877) 252-9262 / Fax: (925) 252-9269
http://www.mccampbell.com / E-mail: main@mccampbell.com

Analytical Report

Client:	AEW Engineering, Inc.	**WorkOrder:**	1602A52
Date Received:	2/25/16 16:16	**Extraction Method:**	SW5030B
Date Prepared:	2/25/16-2/29/16	**Analytical Method:**	SW8021B/8015Bm
Project:	2015-29; Sausalito Gate 5 Characterization	**Unit:**	mg/Kg

Gasoline Range (C6-C12) Volatile Hydrocarbons as Gasoline with BTEX and MTBE

Client ID	Lab ID	Matrix	Date Collected	Instrument	Batch ID
COMP AEW-B8,B9 2.5-5'	**1602A52-009A**	**Soil**	**02/24/2016**	**GC19**	**117357**

Analytes	Result	RL	DF	Date Analyzed
TPH(g)	ND	1.0	1	03/01/2016 17:46
MTBE	ND	0.050	1	03/01/2016 17:46
Benzene	ND	0.0050	1	03/01/2016 17:46
Toluene	ND	0.0050	1	03/01/2016 17:46
Ethylbenzene	ND	0.0050	1	03/01/2016 17:46
Xylenes	ND	0.015	1	03/01/2016 17:46

Surrogates	REC (%)	Limits	
2-Fluorotoluene	103	70-130	03/01/2016 17:46

Analyst(s): IA

Client ID	Lab ID	Matrix	Date Collected	Instrument	Batch ID
COMP AEW-B8,B9 10-15'	**1602A52-010A**	**Soil**	**02/24/2016**	**GC19**	**117357**

Analytes	Result	RL	DF	Date Analyzed
TPH(g)	ND	1.0	1	03/01/2016 18:17
MTBE	ND	0.050	1	03/01/2016 18:17
Benzene	ND	0.0050	1	03/01/2016 18:17
Toluene	ND	0.0050	1	03/01/2016 18:17
Ethylbenzene	ND	0.0050	1	03/01/2016 18:17
Xylenes	ND	0.015	1	03/01/2016 18:17

Surrogates	REC (%)	Limits	
2-Fluorotoluene	101	70-130	03/01/2016 18:17

Analyst(s): IA

(Cont.)

McCampbell Analytical, Inc.
"When Quality Counts"

1534 Willow Pass Road, Pittsburg, CA 94565-1701
Toll Free Telephone: (877) 252-9262 / Fax: (925) 252-9269
http://www.mccampbell.com / E-mail: main@mccampbell.com

Analytical Report

Client:	AEW Engineering, Inc.	**WorkOrder:**	1602A52
Date Received:	2/25/16 16:16	**Extraction Method:**	SW5030B
Date Prepared:	2/25/16-2/29/16	**Analytical Method:**	SW8021B/8015Bm
Project:	2015-29; Sausalito Gate 5 Characterization	**Unit:**	mg/Kg

Gasoline Range (C6-C12) Volatile Hydrocarbons as Gasoline with BTEX and MTBE

Client ID	Lab ID	Matrix	Date Collected	Instrument	Batch ID
COMP AEW-B10,B13 2.5-5'	**1602A52-011A**	**Soil**	**02/25/2016**	**GC19**	**117236**

Analytes	Result	RL	DF	Date Analyzed
TPH(g)	**1.3**	1.0	1	02/27/2016 01:31
MTBE	ND	0.050	1	02/27/2016 01:31
Benzene	ND	0.0050	1	02/27/2016 01:31
Toluene	ND	0.0050	1	02/27/2016 01:31
Ethylbenzene	ND	0.0050	1	02/27/2016 01:31
Xylenes	ND	0.015	1	02/27/2016 01:31

Surrogates	REC (%)	Limits	
2-Fluorotoluene	103	70-130	02/27/2016 01:31

Analyst(s): IA Analytical Comments: d7

Client ID	Lab ID	Matrix	Date Collected	Instrument	Batch ID
COMP AEW-B10,B13 10-15'	**1602A52-012A**	**Soil**	**02/25/2016**	**GC7**	**117236**

Analytes	Result	RL	DF	Date Analyzed
TPH(g)	ND	1.0	1	02/26/2016 15:21
MTBE	ND	0.050	1	02/26/2016 15:21
Benzene	ND	0.0050	1	02/26/2016 15:21
Toluene	ND	0.0050	1	02/26/2016 15:21
Ethylbenzene	ND	0.0050	1	02/26/2016 15:21
Xylenes	ND	0.015	1	02/26/2016 15:21

Surrogates	REC (%)	Limits	
2-Fluorotoluene	100	70-130	02/26/2016 15:21

Analyst(s): IA

(Cont.)

McCampbell Analytical, Inc.
"When Quality Counts"

1534 Willow Pass Road, Pittsburg, CA 94565-1701
Toll Free Telephone: (877) 252-9262 / Fax: (925) 252-9269
http://www.mccampbell.com / E-mail: main@mccampbell.com

Analytical Report

Client:	AEW Engineering, Inc.	**WorkOrder:**	1602A52
Date Received:	2/25/16 16:16	**Extraction Method:**	SW5030B
Date Prepared:	2/25/16-2/29/16	**Analytical Method:**	SW8021B/8015Bm
Project:	2015-29; Sausalito Gate 5 Characterization	**Unit:**	mg/Kg

Gasoline Range (C6-C12) Volatile Hydrocarbons as Gasoline with BTEX and MTBE

Client ID	Lab ID	Matrix	Date Collected	Instrument	Batch ID
COMP AEW-B12,B14 2.5-5'	**1602A52-013A**	**Soil**	**02/25/2016**	**GC7**	**117236**

Analytes	Result	RL	DF	Date Analyzed
TPH(g)	ND	1.0	1	02/26/2016 15:51
MTBE	ND	0.050	1	02/26/2016 15:51
Benzene	ND	0.0050	1	02/26/2016 15:51
Toluene	ND	0.0050	1	02/26/2016 15:51
Ethylbenzene	ND	0.0050	1	02/26/2016 15:51
Xylenes	ND	0.015	1	02/26/2016 15:51

Surrogates	REC (%)	Limits	
2-Fluorotoluene	100	70-130	02/26/2016 15:51

Analyst(s): IA

Client ID	Lab ID	Matrix	Date Collected	Instrument	Batch ID
COMP AEW-B12,B14 10-15'	**1602A52-014A**	**Soil**	**02/25/2016**	**GC19**	**117357**

Analytes	Result	RL	DF	Date Analyzed
TPH(g)	**1.2**	1.0	1	03/01/2016 18:47
MTBE	ND	0.050	1	03/01/2016 18:47
Benzene	ND	0.0050	1	03/01/2016 18:47
Toluene	**0.0093**	0.0050	1	03/01/2016 18:47
Ethylbenzene	**0.013**	0.0050	1	03/01/2016 18:47
Xylenes	**0.034**	0.015	1	03/01/2016 18:47

Surrogates	REC (%)	Limits	
2-Fluorotoluene	91	70-130	03/01/2016 18:47

Analyst(s): IA Analytical Comments: d9

McCampbell Analytical, Inc.
"When Quality Counts"

1534 Willow Pass Road, Pittsburg, CA 94565-1701
Toll Free Telephone: (877) 252-9262 / Fax: (925) 252-9269
http://www.mccampbell.com / E-mail: main@mccampbell.com

Analytical Report

Client:	AEW Engineering, Inc.	**WorkOrder:**	1602A52
Date Received:	2/25/16 16:16	**Extraction Method:**	SW3550B/3630C
Date Prepared:	2/25/16	**Analytical Method:**	SW8015B
Project:	2015-29; Sausalito Gate 5 Characterization	**Unit:**	mg/Kg

Total Extractable Petroleum Hydrocarbons with Silica Gel Clean-Up

Client ID	Lab ID	Matrix	Date Collected	Instrument	Batch ID
COMP AEW-B1,B2 2.5-5'	**1602A52-001A**	**Soil**	**02/24/2016**	**GC9a**	**117202**

Analytes	Result	RL	DF	Date Analyzed
TPH-Diesel (C10-C23)	**1.3**	1.0	1	02/26/2016 07:13
TPH-Motor Oil (C18-C36)	**15**	5.0	1	02/26/2016 07:13

Surrogates	REC (%)	Limits	
C9	89	70-130	02/26/2016 07:13

Analyst(s): TK Analytical Comments: e7,e2

Client ID	Lab ID	Matrix	Date Collected	Instrument	Batch ID
COMP AEW-B1,B2 10-15'	**1602A52-002A**	**Soil**	**02/24/2016**	**GC9b**	**117202**

Analytes	Result	RL	DF	Date Analyzed
TPH-Diesel (C10-C23)	**130**	1.0	1	02/26/2016 11:46
TPH-Motor Oil (C18-C36)	**280**	5.0	1	02/26/2016 11:46

Surrogates	REC (%)	Limits	
C9	95	70-130	02/26/2016 11:46

Analyst(s): TK Analytical Comments: e7,e2

Client ID	Lab ID	Matrix	Date Collected	Instrument	Batch ID
COMP AEW-B3,B4 2.5-5'	**1602A52-003A**	**Soil**	**02/23/2016**	**GC31A**	**117202**

Analytes	Result	RL	DF	Date Analyzed
TPH-Diesel (C10-C23)	**42**	10	1	02/26/2016 18:46
TPH-Motor Oil (C18-C36)	**270**	50	1	02/26/2016 18:46

Surrogates	REC (%)	Limits	
C9	93	70-130	02/26/2016 18:46

Analyst(s): TK Analytical Comments: e7,e2

(Cont.)

McCampbell Analytical, Inc.
"When Quality Counts"

1534 Willow Pass Road, Pittsburg, CA 94565-1701
Toll Free Telephone: (877) 252-9262 / Fax: (925) 252-9269
http://www.mccampbell.com / E-mail: main@mccampbell.com

Analytical Report

Client:	AEW Engineering, Inc.	**WorkOrder:**	1602A52
Date Received:	2/25/16 16:16	**Extraction Method:**	SW3550B/3630C
Date Prepared:	2/25/16	**Analytical Method:**	SW8015B
Project:	2015-29; Sausalito Gate 5 Characterization	**Unit:**	mg/Kg

Total Extractable Petroleum Hydrocarbons with Silica Gel Clean-Up

Client ID	Lab ID	Matrix	Date Collected	Instrument	Batch ID
COMP AEW-B3,4 10-15'	**1602A52-004A**	**Soil**	**02/23/2016**	**GC9a**	**117249**

Analytes	Result	RL	DF	Date Analyzed
TPH-Diesel (C10-C23)	**9.8**	1.0	1	02/26/2016 07:51
TPH-Motor Oil (C18-C36)	**32**	5.0	1	02/26/2016 07:51

Surrogates	REC (%)	Limits	
C9	89	70-130	02/26/2016 07:51

Analyst(s): TK Analytical Comments: e7,e2

Client ID	Lab ID	Matrix	Date Collected	Instrument	Batch ID
COMP AEW-B5,B11 2.5-5'	**1602A52-005A**	**Soil**	**02/25/2016**	**GC31A**	**117249**

Analytes	Result	RL	DF	Date Analyzed
TPH-Diesel (C10-C23)	**110**	10	1	02/26/2016 21:04
TPH-Motor Oil (C18-C36)	**310**	50	1	02/26/2016 21:04

Surrogates	REC (%)	Limits	
C9	103	70-130	02/26/2016 21:04

Analyst(s): TK Analytical Comments: e7,e2,e8

Client ID	Lab ID	Matrix	Date Collected	Instrument	Batch ID
COMP AEW-B5,B11 10-15'	**1602A52-006A**	**Soil**	**02/25/2016**	**GC9b**	**117249**

Analytes	Result	RL	DF	Date Analyzed
TPH-Diesel (C10-C23)	ND	1.0	1	02/26/2016 05:55
TPH-Motor Oil (C18-C36)	ND	5.0	1	02/26/2016 05:55

Surrogates	REC (%)	Limits	
C9	95	70-130	02/26/2016 05:55

Analyst(s): TK

(Cont.)

McCampbell Analytical, Inc.
"When Quality Counts"

1534 Willow Pass Road, Pittsburg, CA 94565-1701
Toll Free Telephone: (877) 252-9262 / Fax: (925) 252-9269
http://www.mccampbell.com / E-mail: main@mccampbell.com

Analytical Report

Client:	AEW Engineering, Inc.	**WorkOrder:**	1602A52
Date Received:	2/25/16 16:16	**Extraction Method:**	SW3550B/3630C
Date Prepared:	2/25/16	**Analytical Method:**	SW8015B
Project:	2015-29; Sausalito Gate 5 Characterization	**Unit:**	mg/Kg

Total Extractable Petroleum Hydrocarbons with Silica Gel Clean-Up

Client ID	Lab ID	Matrix	Date Collected	Instrument	Batch ID
COMP AEW-B6,B7 2.5-5'	**1602A52-007A**	**Soil**	**02/24/2016**	**GC39B**	**117249**

Analytes	Result	RL	DF	Date Analyzed
TPH-Diesel (C10-C23)	**3.3**	1.0	1	02/26/2016 13:15
TPH-Motor Oil (C18-C36)	**66**	5.0	1	02/26/2016 13:15

Surrogates	REC (%)	Limits	
C9	103	70-130	02/26/2016 13:15

Analyst(s): TK Analytical Comments: e7,e2

Client ID	Lab ID	Matrix	Date Collected	Instrument	Batch ID
COMP AEW-B6,B7 10-15'	**1602A52-008A**	**Soil**	**02/24/2016**	**GC9b**	**117249**

Analytes	Result	RL	DF	Date Analyzed
TPH-Diesel (C10-C23)	**1.6**	1.0	1	02/26/2016 06:34
TPH-Motor Oil (C18-C36)	**6.5**	5.0	1	02/26/2016 06:34

Surrogates	REC (%)	Limits	
C9	95	70-130	02/26/2016 06:34

Analyst(s): TK Analytical Comments: e7,e2

Client ID	Lab ID	Matrix	Date Collected	Instrument	Batch ID
COMP AEW-B8,B9 2.5-5'	**1602A52-009A**	**Soil**	**02/24/2016**	**GC31A**	**117249**

Analytes	Result	RL	DF	Date Analyzed
TPH-Diesel (C10-C23)	**56**	10	1	02/26/2016 16:28
TPH-Motor Oil (C18-C36)	**150**	50	1	02/26/2016 16:28

Surrogates	REC (%)	Limits	
C9	105	70-130	02/26/2016 16:28

Analyst(s): TK Analytical Comments: e7,e2

(Cont.)

McCampbell Analytical, Inc.
"When Quality Counts"

1534 Willow Pass Road, Pittsburg, CA 94565-1701
Toll Free Telephone: (877) 252-9262 / Fax: (925) 252-9269
http://www.mccampbell.com / E-mail: main@mccampbell.com

Analytical Report

Client:	AEW Engineering, Inc.	**WorkOrder:**	1602A52
Date Received:	2/25/16 16:16	**Extraction Method:**	SW3550B/3630C
Date Prepared:	2/25/16	**Analytical Method:**	SW8015B
Project:	2015-29; Sausalito Gate 5 Characterization	**Unit:**	mg/Kg

Total Extractable Petroleum Hydrocarbons with Silica Gel Clean-Up

Client ID	Lab ID	Matrix	Date Collected	Instrument	Batch ID
COMP AEW-B8,B9 10-15'	**1602A52-010A**	**Soil**	**02/24/2016**	**GC9b**	**117249**

Analytes	Result	RL	DF	Date Analyzed
TPH-Diesel (C10-C23)	ND	1.0	1	02/26/2016 07:13
TPH-Motor Oil (C18-C36)	**5.3**	5.0	1	02/26/2016 07:13

Surrogates	REC (%)	Limits	
C9	95	70-130	02/26/2016 07:13

Analyst(s): TK Analytical Comments: e7

Client ID	Lab ID	Matrix	Date Collected	Instrument	Batch ID
COMP AEW-B10,B13 2.5-5'	**1602A52-011A**	**Soil**	**02/25/2016**	**GC31A**	**117249**

Analytes	Result	RL	DF	Date Analyzed
TPH-Diesel (C10-C23)	**84**	10	1	02/26/2016 14:09
TPH-Motor Oil (C18-C36)	**310**	50	1	02/26/2016 14:09

Surrogates	REC (%)	Limits	
C9	124	70-130	02/26/2016 14:09

Analyst(s): TK Analytical Comments: e7,e2

Client ID	Lab ID	Matrix	Date Collected	Instrument	Batch ID
COMP AEW-B10,B13 10-15'	**1602A52-012A**	**Soil**	**02/25/2016**	**GC9b**	**117249**

Analytes	Result	RL	DF	Date Analyzed
TPH-Diesel (C10-C23)	**3.0**	1.0	1	02/26/2016 09:48
TPH-Motor Oil (C18-C36)	**10**	5.0	1	02/26/2016 09:48

Surrogates	REC (%)	Limits	
C9	95	70-130	02/26/2016 09:48

Analyst(s): TK Analytical Comments: e7,e2

(Cont.)

McCampbell Analytical, Inc.
"When Quality Counts"

1534 Willow Pass Road, Pittsburg, CA 94565-1701
Toll Free Telephone: (877) 252-9262 / Fax: (925) 252-9269
http://www.mccampbell.com / E-mail: main@mccampbell.com

Analytical Report

Client:	AEW Engineering, Inc.	**WorkOrder:**	1602A52
Date Received:	2/25/16 16:16	**Extraction Method:**	SW3550B/3630C
Date Prepared:	2/25/16	**Analytical Method:**	SW8015B
Project:	2015-29; Sausalito Gate 5 Characterization	**Unit:**	mg/Kg

Total Extractable Petroleum Hydrocarbons with Silica Gel Clean-Up

Client ID	Lab ID	Matrix	Date Collected	Instrument	Batch ID
COMP AEW-B12,B14 2.5-5'	**1602A52-013A**	**Soil**	**02/25/2016**	**GC39A**	**117249**

Analytes	Result	RL	DF	Date Analyzed
TPH-Diesel (C10-C23)	**3.6**	1.0	1	02/26/2016 11:57
TPH-Motor Oil (C18-C36)	**50**	5.0	1	02/26/2016 11:57

Surrogates	REC (%)	Limits	
C9	101	70-130	02/26/2016 11:57

Analyst(s): TK Analytical Comments: e7,e2

Client ID	Lab ID	Matrix	Date Collected	Instrument	Batch ID
COMP AEW-B12,B14 10-15'	**1602A52-014A**	**Soil**	**02/25/2016**	**GC9a**	**117249**

Analytes	Result	RL	DF	Date Analyzed
TPH-Diesel (C10-C23)	**2.5**	1.0	1	02/26/2016 09:48
TPH-Motor Oil (C18-C36)	ND	5.0	1	02/26/2016 09:48

Surrogates	REC (%)	Limits	
C9	88	70-130	02/26/2016 09:48

Analyst(s): TK Analytical Comments: e6

McCampbell Analytical, Inc.
"When Quality Counts"

1534 Willow Pass Road, Pittsburg, CA 94565-1701
Toll Free Telephone: (877) 252-9262 / Fax: (925) 252-9269
http://www.mccampbell.com / E-mail: main@mccampbell.com

Quality Control Report

Client:	AEW Engineering, Inc.	**WorkOrder:**	1602A52
Date Prepared:	2/25/16	**BatchID:**	117229
Date Analyzed:	2/25/16	**Extraction Method:**	SW3550B
Instrument:	GC23	**Analytical Method:**	SW8082
Matrix:	Soil	**Unit:**	mg/kg
Project:	2015-29; Sausalito Gate 5 Characterization	**Sample ID:**	MB/LCS-117229 1602A42-010AMS/MSD

QC Summary Report for SW8082

Analyte	MB Result	LCS Result	MDL	RL	SPK Val	MB SS %REC	LCS %REC	LCS Limits
Aroclor1016	ND	-	0.0051	0.050	-	-	-	-
Aroclor1221	ND	-	0.033	0.050	-	-	-	-
Aroclor1232	ND	-	0.0032	0.050	-	-	-	-
Aroclor1242	ND	-	0.0035	0.050	-	-	-	-
Aroclor1248	ND	-	0.0036	0.050	-	-	-	-
Aroclor1254	ND	-	0.0022	0.050	-	-	-	-
Aroclor1260	ND	0.154	0.0085	0.050	0.15	-	102	70-130
PCBs, total	ND	-	0.033	0.050	-	-	-	-
Surrogate Recovery								
Decachlorobiphenyl	0.0414	0.0420			0.050	83	84	70-130

Analyte	MS Result	MSD Result	SPK Val	SPKRef Val	MS %REC	MSD %REC	MS/MSD Limits	RPD	RPD Limit
Aroclor1260	0.161	0.159	0.15	ND	107	106	70-130	1.46	30
Surrogate Recovery									
Decachlorobiphenyl	0.0457	0.0444	0.050		91	89	70-130	3.02	30

(Cont.)

McCampbell Analytical, Inc.
"When Quality Counts"

1534 Willow Pass Road, Pittsburg, CA 94565-1701
Toll Free Telephone: (877) 252-9262 / Fax: (925) 252-9269
http://www.mccampbell.com / E-mail: main@mccampbell.com

Quality Control Report

Client:	AEW Engineering, Inc.	**WorkOrder:**	1602A52
Date Prepared:	2/25/16	**BatchID:**	117252
Date Analyzed:	2/26/16	**Extraction Method:**	SW3550B
Instrument:	GC5A	**Analytical Method:**	SW8082
Matrix:	Soil	**Unit:**	mg/kg
Project:	2015-29; Sausalito Gate 5 Characterization	**Sample ID:**	MB/LCS-117252 1602A52-014AMS/MSD

QC Summary Report for SW8082

Analyte	MB Result	LCS Result	MDL	RL	SPK Val	MB SS %REC	LCS %REC	LCS Limits
Aroclor1016	ND	-	0.0051	0.050	-	-	-	-
Aroclor1221	ND	-	0.033	0.050	-	-	-	-
Aroclor1232	ND	-	0.0032	0.050	-	-	-	-
Aroclor1242	ND	-	0.0035	0.050	-	-	-	-
Aroclor1248	ND	-	0.0036	0.050	-	-	-	-
Aroclor1254	ND	-	0.0022	0.050	-	-	-	-
Aroclor1260	ND	0.162	0.0085	0.050	0.15	-	108	70-130
PCBs, total	ND	-	0.033	0.050	-	-	-	-
Surrogate Recovery								
Decachlorobiphenyl	0.0440	0.0480			0.050	88	96	70-130

Analyte	MS Result	MSD Result	SPK Val	SPKRef Val	MS %REC	MSD %REC	MS/MSD Limits	RPD	RPD Limit
Aroclor1260	0.164	0.167	0.15	ND	110	111	70-130	1.63	30
Surrogate Recovery									
Decachlorobiphenyl	0.0500	0.0496	0.050		100	99	70-130	0.761	30

McCampbell Analytical, Inc.
"When Quality Counts"

1534 Willow Pass Road, Pittsburg, CA 94565-1701
Toll Free Telephone: (877) 252-9262 / Fax: (925) 252-9269
http://www.mccampbell.com / E-mail: main@mccampbell.com

Quality Control Report

Client:	AEW Engineering, Inc.	**WorkOrder:**	1602A52
Date Prepared:	2/26/16	**BatchID:**	117411
Date Analyzed:	3/1/16	**Extraction Method:**	SW3550B/3630C
Instrument:	GC5A	**Analytical Method:**	SW8082
Matrix:	Soil	**Unit:**	mg/kg
Project:	2015-29; Sausalito Gate 5 Characterization	**Sample ID:**	MB/LCS-117411

QC Summary Report for SW8082

Analyte	MB Result	LCS Result	MDL	RL	SPK Val	MB SS %REC	LCS %REC	LCS Limits
Aroclor1016	ND	-	0.0051	0.050	-	-	-	-
Aroclor1221	ND	-	0.011	0.050	-	-	-	-
Aroclor1232	ND	-	0.0063	0.050	-	-	-	-
Aroclor1242	ND	-	0.0067	0.050	-	-	-	-
Aroclor1248	ND	-	0.0040	0.050	-	-	-	-
Aroclor1254	ND	-	0.0068	0.050	-	-	-	-
Aroclor1260	ND	0.145	0.0061	0.050	0.15	-	97	70-130
PCBs, total	ND	-	0.0040	0.050	-	-	-	-
Surrogate Recovery								
Decachlorobiphenyl	0.0475	0.0487			0.050	95	97	70-130

McCampbell Analytical, Inc.
"When Quality Counts"

1534 Willow Pass Road, Pittsburg, CA 94565-1701
Toll Free Telephone: (877) 252-9262 / Fax: (925) 252-9269
http://www.mccampbell.com / E-mail: main@mccampbell.com

Quality Control Report

Client:	AEW Engineering, Inc.	**WorkOrder:**	1602A52
Date Prepared:	2/25/16	**BatchID:**	117251
Date Analyzed:	2/26/16	**Extraction Method:**	SW5030B
Instrument:	GC10, GC16	**Analytical Method:**	SW8260B
Matrix:	Soil	**Unit:**	mg/kg
Project:	2015-29; Sausalito Gate 5 Characterization	**Sample ID:**	MB/LCS-117251 1602A52-012AMS/MSD

QC Summary Report for SW8260B

Analyte	MB Result	LCS Result	RL	SPK Val	MB SS %REC	LCS %REC	LCS Limits
Acetone	ND	-	0.10	-	-	-	-
tert-Amyl methyl ether (TAME)	ND	0.0382	0.0050	0.050	-	76	53-116
Benzene	ND	0.0436	0.0050	0.050	-	87	63-137
Bromobenzene	ND	-	0.0050	-	-	-	-
Bromochloromethane	ND	-	0.0050	-	-	-	-
Bromodichloromethane	ND	-	0.0050	-	-	-	-
Bromoform	ND	-	0.0050	-	-	-	-
Bromomethane	ND	-	0.0050	-	-	-	-
2-Butanone (MEK)	ND	-	0.020	-	-	-	-
t-Butyl alcohol (TBA)	ND	0.216	0.050	0.20	-	108	41-135
n-Butyl benzene	ND	-	0.0050	-	-	-	-
sec-Butyl benzene	ND	-	0.0050	-	-	-	-
tert-Butyl benzene	ND	-	0.0050	-	-	-	-
Carbon Disulfide	ND	-	0.0050	-	-	-	-
Carbon Tetrachloride	ND	-	0.0050	-	-	-	-
Chlorobenzene	ND	0.0434	0.0050	0.050	-	87	77-121
Chloroethane	ND	-	0.0050	-	-	-	-
Chloroform	ND	-	0.0050	-	-	-	-
Chloromethane	ND	-	0.0050	-	-	-	-
2-Chlorotoluene	ND	-	0.0050	-	-	-	-
4-Chlorotoluene	ND	-	0.0050	-	-	-	-
Dibromochloromethane	ND	-	0.0050	-	-	-	-
1,2-Dibromo-3-chloropropane	ND	-	0.0040	-	-	-	-
1,2-Dibromoethane (EDB)	ND	0.0479	0.0040	0.050	-	96	67-119
Dibromomethane	ND	-	0.0050	-	-	-	-
1,2-Dichlorobenzene	ND	-	0.0050	-	-	-	-
1,3-Dichlorobenzene	ND	-	0.0050	-	-	-	-
1,4-Dichlorobenzene	ND	-	0.0050	-	-	-	-
Dichlorodifluoromethane	ND	-	0.0050	-	-	-	-
1,1-Dichloroethane	ND	-	0.0050	-	-	-	-
1,2-Dichloroethane (1,2-DCA)	ND	0.0446	0.0040	0.050	-	89	58-135
1,1-Dichloroethene	ND	0.0412	0.0050	0.050	-	82	42-145
cis-1,2-Dichloroethene	ND	-	0.0050	-	-	-	-
trans-1,2-Dichloroethene	ND	-	0.0050	-	-	-	-
1,2-Dichloropropane	ND	-	0.0050	-	-	-	-
1,3-Dichloropropane	ND	-	0.0050	-	-	-	-
2,2-Dichloropropane	ND	-	0.0050	-	-	-	-

(Cont.)

McCampbell Analytical, Inc.
"When Quality Counts"

1534 Willow Pass Road, Pittsburg, CA 94565-1701
Toll Free Telephone: (877) 252-9262 / Fax: (925) 252-9269
http://www.mccampbell.com / E-mail: main@mccampbell.com

Quality Control Report

Client:	AEW Engineering, Inc.	**WorkOrder:**	1602A52
Date Prepared:	2/25/16	**BatchID:**	117251
Date Analyzed:	2/26/16	**Extraction Method:**	SW5030B
Instrument:	GC10, GC16	**Analytical Method:**	SW8260B
Matrix:	Soil	**Unit:**	mg/kg
Project:	2015-29; Sausalito Gate 5 Characterization	**Sample ID:**	MB/LCS-117251 1602A52-012AMS/MSD

QC Summary Report for SW8260B

Analyte	MB Result	LCS Result	RL	SPK Val	MB SS %REC	LCS %REC	LCS Limits
1,1-Dichloropropene	ND	-	0.0050	-	-	-	-
cis-1,3-Dichloropropene	ND	-	0.0050	-	-	-	-
trans-1,3-Dichloropropene	ND	-	0.0050	-	-	-	-
Diisopropyl ether (DIPE)	ND	0.0433	0.0050	0.050	-	87	52-129
Ethylbenzene	ND	-	0.0050	-	-	-	-
Ethyl tert-butyl ether (ETBE)	ND	0.0419	0.0050	0.050	-	84	53-125
Freon 113	ND	-	0.0050	-	-	-	-
Hexachlorobutadiene	ND	-	0.0050	-	-	-	-
Hexachloroethane	ND	-	0.0050	-	-	-	-
2-Hexanone	ND	-	0.0050	-	-	-	-
Isopropylbenzene	ND	-	0.0050	-	-	-	-
4-Isopropyl toluene	ND	-	0.0050	-	-	-	-
Methyl-t-butyl ether (MTBE)	ND	0.0408	0.0050	0.050	-	82	58-122
Methylene chloride	ND	-	0.0050	-	-	-	-
4-Methyl-2-pentanone (MIBK)	ND	-	0.0050	-	-	-	-
Naphthalene	ND	-	0.0050	-	-	-	-
n-Propyl benzene	ND	-	0.0050	-	-	-	-
Styrene	ND	-	0.0050	-	-	-	-
1,1,1,2-Tetrachloroethane	ND	-	0.0050	-	-	-	-
1,1,2,2-Tetrachloroethane	ND	-	0.0050	-	-	-	-
Tetrachloroethene	ND	-	0.0050	-	-	-	-
Toluene	ND	0.0424	0.0050	0.050	-	85	76-130
1,2,3-Trichlorobenzene	ND	-	0.0050	-	-	-	-
1,2,4-Trichlorobenzene	ND	-	0.0050	-	-	-	-
1,1,1-Trichloroethane	ND	-	0.0050	-	-	-	-
1,1,2-Trichloroethane	ND	-	0.0050	-	-	-	-
Trichloroethene	ND	0.0455	0.0050	0.050	-	91	72-132
Trichlorofluoromethane	ND	-	0.0050	-	-	-	-
1,2,3-Trichloropropane	ND	-	0.0050	-	-	-	-
1,2,4-Trimethylbenzene	ND	-	0.0050	-	-	-	-
1,3,5-Trimethylbenzene	ND	-	0.0050	-	-	-	-
Vinyl Chloride	ND	-	0.0050	-	-	-	-
Xylenes, Total	ND	-	0.0050	-	-	-	-

(Cont.)

McCampbell Analytical, Inc.
"When Quality Counts"

1534 Willow Pass Road, Pittsburg, CA 94565-1701
Toll Free Telephone: (877) 252-9262 / Fax: (925) 252-9269
http://www.mccampbell.com / E-mail: main@mccampbell.com

Quality Control Report

Client:	AEW Engineering, Inc.	**WorkOrder:**	1602A52
Date Prepared:	2/25/16	**BatchID:**	117251
Date Analyzed:	2/26/16	**Extraction Method:**	SW5030B
Instrument:	GC10, GC16	**Analytical Method:**	SW8260B
Matrix:	Soil	**Unit:**	mg/kg
Project:	2015-29; Sausalito Gate 5 Characterization	**Sample ID:**	MB/LCS-117251 1602A52-012AMS/MSD

QC Summary Report for SW8260B

Analyte	MB Result	LCS Result	RL	SPK Val	MB SS %REC	LCS %REC	LCS Limits
Surrogate Recovery							
Dibromofluoromethane	0.134	0.132		0.12	108	106	70-130
Toluene-d8	0.151	0.139		0.12	121	111	70-130
4-BFB	0.0113	0.0139		0.012	91	111	70-130
Benzene-d6	0.114	0.102		0.10	114	102	60-140
Ethylbenzene-d10	0.132	0.116		0.10	132	116	60-140
1,2-DCB-d4	0.110	0.0730		0.10	110	73	60-140

Analyte	MS Result	MSD Result	SPK Val	SPKRef Val	MS %REC	MSD %REC	MS/MSD Limits	RPD	RPD Limit
tert-Amyl methyl ether (TAME)	0.0443	0.0428	0.050	ND	89	86	56-94	3.48	20
Benzene	0.0417	0.0404	0.050	ND	83	81	60-106	3.34	20
t-Butyl alcohol (TBA)	0.165	0.162	0.20	ND	83	81	56-140	1.62	20
Chlorobenzene	0.0422	0.0403	0.050	ND	84	81	61-108	4.62	20
1,2-Dibromoethane (EDB)	0.0398	0.0393	0.050	ND	80	79	54-119	1.17	20
1,2-Dichloroethane (1,2-DCA)	0.0407	0.0408	0.050	ND	81	82	48-115	0.200	20
1,1-Dichloroethene	0.0311	0.0310	0.050	ND	62	62	46-111	0	20
Diisopropyl ether (DIPE)	0.0417	0.0400	0.050	ND	83	80	53-111	4.37	20
Ethyl tert-butyl ether (ETBE)	0.0434	0.0419	0.050	ND	87	84	61-104	3.58	20
Methyl-t-butyl ether (MTBE)	0.0413	0.0402	0.050	ND	83	80	58-107	2.56	20
Toluene	0.0405	0.0383	0.050	ND	81	77	64-114	5.59	20
Trichloroethene	0.0387	0.0386	0.050	ND	77	77	60-116	0	20
Surrogate Recovery									
Dibromofluoromethane	0.152	0.154	0.12		121	124	70-130	1.93	20
Toluene-d8	0.147	0.146	0.12		118	117	70-130	0.820	20
4-BFB	0.0126	0.0123	0.012		101	98	88-121	2.44	20
Benzene-d6	0.101	0.0970	0.10		101	97	60-140	4.00	20
Ethylbenzene-d10	0.106	0.101	0.10		106	101	60-140	5.22	20
1,2-DCB-d4	0.0941	0.0894	0.10		94	89	60-140	5.17	20

(Cont.)

McCampbell Analytical, Inc.
"When Quality Counts"

1534 Willow Pass Road, Pittsburg, CA 94565-1701
Toll Free Telephone: (877) 252-9262 / Fax: (925) 252-9269
http://www.mccampbell.com / E-mail: main@mccampbell.com

Quality Control Report

Client:	AEW Engineering, Inc.	**WorkOrder:**	1602A52
Date Prepared:	2/29/16	**BatchID:**	117384
Date Analyzed:	3/1/16	**Extraction Method:**	SW5030B
Instrument:	GC10, GC16	**Analytical Method:**	SW8260B
Matrix:	Soil	**Unit:**	mg/kg
Project:	2015-29; Sausalito Gate 5 Characterization	**Sample ID:**	MB/LCS-117384 1602B98-001AMS/MSD

QC Summary Report for SW8260B

Analyte	MB Result	LCS Result	RL	SPK Val	MB SS %REC	LCS %REC	LCS Limits
Acetone	ND	-	0.10	-	-	-	-
tert-Amyl methyl ether (TAME)	ND	0.0370	0.0050	0.050	-	74	53-116
Benzene	ND	0.0417	0.0050	0.050	-	83	63-137
Bromobenzene	ND	-	0.0050	-	-	-	-
Bromochloromethane	ND	-	0.0050	-	-	-	-
Bromodichloromethane	ND	-	0.0050	-	-	-	-
Bromoform	ND	-	0.0050	-	-	-	-
Bromomethane	ND	-	0.0050	-	-	-	-
2-Butanone (MEK)	ND	-	0.020	-	-	-	-
t-Butyl alcohol (TBA)	ND	0.216	0.050	0.20	-	108	41-135
n-Butyl benzene	ND	-	0.0050	-	-	-	-
sec-Butyl benzene	ND	-	0.0050	-	-	-	-
tert-Butyl benzene	ND	-	0.0050	-	-	-	-
Carbon Disulfide	ND	-	0.0050	-	-	-	-
Carbon Tetrachloride	ND	-	0.0050	-	-	-	-
Chlorobenzene	ND	0.0441	0.0050	0.050	-	88	77-121
Chloroethane	ND	-	0.0050	-	-	-	-
Chloroform	ND	-	0.0050	-	-	-	-
Chloromethane	ND	-	0.0050	-	-	-	-
2-Chlorotoluene	ND	-	0.0050	-	-	-	-
4-Chlorotoluene	ND	-	0.0050	-	-	-	-
Dibromochloromethane	ND	-	0.0050	-	-	-	-
1,2-Dibromo-3-chloropropane	ND	-	0.0040	-	-	-	-
1,2-Dibromoethane (EDB)	ND	0.0447	0.0040	0.050	-	89	67-119
Dibromomethane	ND	-	0.0050	-	-	-	-
1,2-Dichlorobenzene	ND	-	0.0050	-	-	-	-
1,3-Dichlorobenzene	ND	-	0.0050	-	-	-	-
1,4-Dichlorobenzene	ND	-	0.0050	-	-	-	-
Dichlorodifluoromethane	ND	-	0.0050	-	-	-	-
1,1-Dichloroethane	ND	-	0.0050	-	-	-	-
1,2-Dichloroethane (1,2-DCA)	ND	0.0442	0.0040	0.050	-	88	58-135
1,1-Dichloroethene	ND	0.0368	0.0050	0.050	-	74	42-145
cis-1,2-Dichloroethene	ND	-	0.0050	-	-	-	-
trans-1,2-Dichloroethene	ND	-	0.0050	-	-	-	-
1,2-Dichloropropane	ND	-	0.0050	-	-	-	-
1,3-Dichloropropane	ND	-	0.0050	-	-	-	-
2,2-Dichloropropane	ND	-	0.0050	-	-	-	-

(Cont.)

McCampbell Analytical, Inc.
"When Quality Counts"

1534 Willow Pass Road, Pittsburg, CA 94565-1701
Toll Free Telephone: (877) 252-9262 / Fax: (925) 252-9269
http://www.mccampbell.com / E-mail: main@mccampbell.com

Quality Control Report

Client:	AEW Engineering, Inc.	**WorkOrder:**	1602A52
Date Prepared:	2/29/16	**BatchID:**	117384
Date Analyzed:	3/1/16	**Extraction Method:**	SW5030B
Instrument:	GC10, GC16	**Analytical Method:**	SW8260B
Matrix:	Soil	**Unit:**	mg/kg
Project:	2015-29; Sausalito Gate 5 Characterization	**Sample ID:**	MB/LCS-117384 1602B98-001AMS/MSD

QC Summary Report for SW8260B

Analyte	MB Result	LCS Result	RL	SPK Val	MB SS %REC	LCS %REC	LCS Limits
1,1-Dichloropropene	ND	-	0.0050	-	-	-	-
cis-1,3-Dichloropropene	ND	-	0.0050	-	-	-	-
trans-1,3-Dichloropropene	ND	-	0.0050	-	-	-	-
Diisopropyl ether (DIPE)	ND	0.0409	0.0050	0.050	-	82	52-129
Ethylbenzene	ND	-	0.0050	-	-	-	-
Ethyl tert-butyl ether (ETBE)	ND	0.0402	0.0050	0.050	-	80	53-125
Freon 113	ND	-	0.0050	-	-	-	-
Hexachlorobutadiene	ND	-	0.0050	-	-	-	-
Hexachloroethane	ND	-	0.0050	-	-	-	-
2-Hexanone	ND	-	0.0050	-	-	-	-
Isopropylbenzene	ND	-	0.0050	-	-	-	-
4-Isopropyl toluene	ND	-	0.0050	-	-	-	-
Methyl-t-butyl ether (MTBE)	ND	0.0387	0.0050	0.050	-	77	58-122
Methylene chloride	ND	-	0.0050	-	-	-	-
4-Methyl-2-pentanone (MIBK)	ND	-	0.0050	-	-	-	-
Naphthalene	ND	-	0.0050	-	-	-	-
n-Propyl benzene	ND	-	0.0050	-	-	-	-
Styrene	ND	-	0.0050	-	-	-	-
1,1,1,2-Tetrachloroethane	ND	-	0.0050	-	-	-	-
1,1,2,2-Tetrachloroethane	ND	-	0.0050	-	-	-	-
Tetrachloroethene	ND	-	0.0050	-	-	-	-
Toluene	ND	0.0434	0.0050	0.050	-	87	76-130
1,2,3-Trichlorobenzene	ND	-	0.0050	-	-	-	-
1,2,4-Trichlorobenzene	ND	-	0.0050	-	-	-	-
1,1,1-Trichloroethane	ND	-	0.0050	-	-	-	-
1,1,2-Trichloroethane	ND	-	0.0050	-	-	-	-
Trichloroethene	ND	0.0418	0.0050	0.050	-	84	72-132
Trichlorofluoromethane	ND	-	0.0050	-	-	-	-
1,2,3-Trichloropropane	ND	-	0.0050	-	-	-	-
1,2,4-Trimethylbenzene	ND	-	0.0050	-	-	-	-
1,3,5-Trimethylbenzene	ND	-	0.0050	-	-	-	-
Vinyl Chloride	ND	-	0.0050	-	-	-	-
Xylenes, Total	ND	-	0.0050	-	-	-	-

(Cont.)

McCampbell Analytical, Inc.
"When Quality Counts"

1534 Willow Pass Road, Pittsburg, CA 94565-1701
Toll Free Telephone: (877) 252-9262 / Fax: (925) 252-9269
http://www.mccampbell.com / E-mail: main@mccampbell.com

Quality Control Report

Client:	AEW Engineering, Inc.	**WorkOrder:**	1602A52
Date Prepared:	2/29/16	**BatchID:**	117384
Date Analyzed:	3/1/16	**Extraction Method:**	SW5030B
Instrument:	GC10, GC16	**Analytical Method:**	SW8260B
Matrix:	Soil	**Unit:**	mg/kg
Project:	2015-29; Sausalito Gate 5 Characterization	**Sample ID:**	MB/LCS-117384 1602B98-001AMS/MSD

QC Summary Report for SW8260B

Analyte	MB Result	LCS Result	RL	SPK Val	MB SS %REC	LCS %REC	LCS Limits
Surrogate Recovery							
Dibromofluoromethane	0.121	0.129		0.12	97	103	70-130
Toluene-d8	0.140	0.148		0.12	112	118	70-130
4-BFB	0.0115	0.0154		0.012	92	123	70-130
Benzene-d6	0.0858	0.110		0.10	86	110	60-140
Ethylbenzene-d10	0.108	0.126		0.10	108	126	60-140
1,2-DCB-d4	0.0859	0.0769		0.10	86	77	60-140

Analyte	MS Result	MSD Result	SPK Val	SPKRef Val	MS %REC	MSD %REC	MS/MSD Limits	RPD	RPD Limit
tert-Amyl methyl ether (TAME)	0.0524	0.0578	0.050	ND	105	116	70-130	9.92	20
Benzene	0.0522	0.0576	0.050	ND	104	115	70-130	9.86	20
t-Butyl alcohol (TBA)	0.204	0.226	0.20	ND	102	113	70-130	10.4	20
Chlorobenzene	0.0461	0.0529	0.050	ND	92	106	70-130	13.7	20
1,2-Dibromoethane (EDB)	0.0450	0.0512	0.050	ND	90	102	70-130	12.8	20
1,2-Dichloroethane (1,2-DCA)	0.0494	0.0549	0.050	ND	99	110	70-130	10.5	20
1,1-Dichloroethene	0.0440	0.0497	0.050	ND	88	99	70-130	12.2	20
Diisopropyl ether (DIPE)	0.0506	0.0564	0.050	ND	101	113	70-130	10.7	20
Ethyl tert-butyl ether (ETBE)	0.0522	0.0578	0.050	ND	104	116	70-130	10.3	20
Methyl-t-butyl ether (MTBE)	0.0516	0.0562	0.050	ND	103	112	70-130	8.49	20
Toluene	0.0445	0.0507	0.050	ND	89	101	70-130	12.9	20
Trichloroethene	0.0481	0.0542	0.050	ND	96	108	70-130	11.9	20
Surrogate Recovery									
Dibromofluoromethane	0.157	0.158	0.12		126	126	70-130	0	20
Toluene-d8	0.142	0.143	0.12		113	114	70-130	0.971	20
4-BFB	0.0118	0.0120	0.012		94	96	70-130	2.04	20
Benzene-d6	0.128	0.133	0.10		128	133	60-140	4.09	20
Ethylbenzene-d10	0.125	0.133	0.10		125	133	60-140	6.33	20
1,2-DCB-d4	0.105	0.111	0.10		105	111	60-140	5.12	20

McCampbell Analytical, Inc.
"When Quality Counts"

1534 Willow Pass Road, Pittsburg, CA 94565-1701
Toll Free Telephone: (877) 252-9262 / Fax: (925) 252-9269
http://www.mccampbell.com / E-mail: main@mccampbell.com

Quality Control Report

Client:	AEW Engineering, Inc.	**WorkOrder:**	1602A52
Date Prepared:	2/25/16	**BatchID:**	117265
Date Analyzed:	2/26/16	**Extraction Method:**	SW3550B/3640A
Instrument:	GC21	**Analytical Method:**	SW8270C
Matrix:	Soil	**Unit:**	mg/Kg
Project:	2015-29; Sausalito Gate 5 Characterization	**Sample ID:**	MB/LCS-117265

QC Summary Report for SW8270C w/ GPC Clean Up

Analyte	MB Result	LCS Result	MDL	RL	SPK Val	MB SS %REC	LCS %REC	LCS Limits
Acenaphthene	ND	4.89	0.14	0.25	5	-	98	30-130
Acenaphthylene	ND	-	0.14	0.25	-	-	-	-
Acetochlor	ND	-	0.25	0.25	-	-	-	-
Anthracene	ND	-	0.14	0.25	-	-	-	-
Benzidine	ND	-	0.23	1.3	-	-	-	-
Benzo (a) anthracene	ND	-	0.14	0.25	-	-	-	-
Benzo (b) fluoranthene	ND	-	0.14	0.25	-	-	-	-
Benzo (k) fluoranthene	ND	-	0.16	0.25	-	-	-	-
Benzo (g,h,i) perylene	ND	-	0.15	0.25	-	-	-	-
Benzo (a) pyrene	ND	-	0.14	0.25	-	-	-	-
Benzyl Alcohol	ND	-	0.51	1.3	-	-	-	-
1,1-Biphenyl	ND	-	0.15	0.25	-	-	-	-
Bis (2-chloroethoxy) Methane	ND	-	0.14	0.25	-	-	-	-
Bis (2-chloroethyl) Ether	ND	-	0.13	0.25	-	-	-	-
Bis (2-chloroisopropyl) Ether	ND	-	0.12	0.25	-	-	-	-
Bis (2-ethylhexyl) Adipate	ND	-	0.25	0.25	-	-	-	-
Bis (2-ethylhexyl) Phthalate	ND	-	0.13	0.25	-	-	-	-
4-Bromophenyl Phenyl Ether	ND	-	0.16	0.25	-	-	-	-
Butylbenzyl Phthalate	ND	-	0.13	0.25	-	-	-	-
4-Chloroaniline	ND	-	0.13	0.25	-	-	-	-
4-Chloro-3-methylphenol	ND	4.92	0.12	0.25	5	-	98	30-130
2-Chloronaphthalene	ND	-	0.16	0.25	-	-	-	-
2-Chlorophenol	ND	4.75	0.14	0.25	5	-	95	30-130
4-Chlorophenyl Phenyl Ether	ND	-	0.15	0.25	-	-	-	-
Chrysene	ND	-	0.14	0.25	-	-	-	-
Dibenzo (a,h) anthracene	ND	-	0.16	0.25	-	-	-	-
Dibenzofuran	ND	-	0.13	0.25	-	-	-	-
Di-n-butyl Phthalate	ND	-	0.13	0.25	-	-	-	-
1,2-Dichlorobenzene	ND	-	0.12	0.25	-	-	-	-
1,3-Dichlorobenzene	ND	-	0.14	0.25	-	-	-	-
1,4-Dichlorobenzene	ND	4.00	0.13	0.25	5	-	80	30-130
3,3-Dichlorobenzidine	ND	-	0.12	0.50	-	-	-	-
2,4-Dichlorophenol	ND	-	0.13	0.25	-	-	-	-
Diethyl Phthalate	ND	-	0.14	0.25	-	-	-	-
2,4-Dimethylphenol	ND	-	0.13	0.25	-	-	-	-
Dimethyl Phthalate	ND	-	0.14	0.25	-	-	-	-
4,6-Dinitro-2-methylphenol	ND	-	0.13	1.3	-	-	-	-

(Cont.)

McCampbell Analytical, Inc.
"When Quality Counts"

1534 Willow Pass Road, Pittsburg, CA 94565-1701
Toll Free Telephone: (877) 252-9262 / Fax: (925) 252-9269
http://www.mccampbell.com / E-mail: main@mccampbell.com

Quality Control Report

Client:	AEW Engineering, Inc.	**WorkOrder:**	1602A52
Date Prepared:	2/25/16	**BatchID:**	117265
Date Analyzed:	2/26/16	**Extraction Method:**	SW3550B/3640A
Instrument:	GC21	**Analytical Method:**	SW8270C
Matrix:	Soil	**Unit:**	mg/Kg
Project:	2015-29; Sausalito Gate 5 Characterization	**Sample ID:**	MB/LCS-117265

QC Summary Report for SW8270C w/ GPC Clean Up

Analyte	MB Result	LCS Result	MDL	RL	SPK Val	MB SS %REC	LCS %REC	LCS Limits
2,4-Dinitrophenol	ND	-	1.3	6.3	-	-	-	-
2,4-Dinitrotoluene	ND	4.59	0.13	0.25	5	-	92	30-130
2,6-Dinitrotoluene	ND	-	0.14	0.25	-	-	-	-
Di-n-octyl Phthalate	ND	-	0.14	0.50	-	-	-	-
1,2-Diphenylhydrazine	ND	-	0.16	0.25	-	-	-	-
Fluoranthene	ND	-	0.13	0.25	-	-	-	-
Fluorene	ND	-	0.14	0.25	-	-	-	-
Hexachlorobenzene	ND	-	0.17	0.25	-	-	-	-
Hexachlorobutadiene	ND	-	0.15	0.25	-	-	-	-
Hexachlorocyclopentadiene	ND	-	0.73	1.3	-	-	-	-
Hexachloroethane	ND	-	0.14	0.25	-	-	-	-
Indeno (1,2,3-cd) pyrene	ND	-	0.14	0.25	-	-	-	-
Isophorone	ND	-	0.12	0.25	-	-	-	-
2-Methylnaphthalene	ND	-	0.14	0.25	-	-	-	-
2-Methylphenol (o-Cresol)	ND	-	0.14	0.25	-	-	-	-
3 & 4-Methylphenol (m,p-Cresol)	ND	-	0.12	0.25	-	-	-	-
Naphthalene	ND	-	0.13	0.25	-	-	-	-
2-Nitroaniline	ND	-	0.62	1.3	-	-	-	-
3-Nitroaniline	ND	-	0.59	1.3	-	-	-	-
4-Nitroaniline	ND	-	0.55	1.3	-	-	-	-
Nitrobenzene	ND	-	0.14	1.3	-	-	-	-
2-Nitrophenol	ND	-	0.64	1.3	-	-	-	-
4-Nitrophenol	ND	5.18	0.41	1.3	5	-	104	30-130
N-Nitrosodiphenylamine	ND	-	0.16	0.25	-	-	-	-
N-Nitrosodi-n-propylamine	ND	5.28	0.13	0.25	5	-	106	30-130
Pentachlorophenol	ND	5.86	0.061	1.3	5	-	117	30-130
Phenanthrene	ND	-	0.14	0.25	-	-	-	-
Phenol	ND	4.61	0.12	0.25	5	-	92	30-130
Pyrene	ND	4.93	0.13	0.25	5	-	99	30-130
1,2,4-Trichlorobenzene	ND	4.16	0.14	0.25	5	-	83	30-130
2,4,5-Trichlorophenol	ND	-	0.12	0.25	-	-	-	-
2,4,6-Trichlorophenol	ND	-	0.14	0.25	-	-	-	-

(Cont.)

McCampbell Analytical, Inc.
"When Quality Counts"

1534 Willow Pass Road, Pittsburg, CA 94565-1701
Toll Free Telephone: (877) 252-9262 / Fax: (925) 252-9269
http://www.mccampbell.com / E-mail: main@mccampbell.com

Quality Control Report

Client:	AEW Engineering, Inc.	**WorkOrder:**	1602A52
Date Prepared:	2/25/16	**BatchID:**	117265
Date Analyzed:	2/26/16	**Extraction Method:**	SW3550B/3640A
Instrument:	GC21	**Analytical Method:**	SW8270C
Matrix:	Soil	**Unit:**	mg/Kg
Project:	2015-29; Sausalito Gate 5 Characterization	**Sample ID:**	MB/LCS-117265

QC Summary Report for SW8270C w/ GPC Clean Up

Analyte	MB Result	LCS Result	MDL	RL	SPK Val	MB SS %REC	LCS %REC	LCS Limits
Surrogate Recovery								
2-Fluorophenol	5.22	4.58			5	104	92	30-130
Phenol-d5	5.16	4.47			5	103	89	30-130
Nitrobenzene-d5	4.51	4.22			5	90	84	30-130
2-Fluorobiphenyl	4.54	4.26			5	91	85	30-130
2,4,6-Tribromophenol	3.66	3.24			5	73	65	16-130
4-Terphenyl-d14	4.33	4.02			5	87	80	30-130

(Cont.)

McCampbell Analytical, Inc.
"When Quality Counts"

1534 Willow Pass Road, Pittsburg, CA 94565-1701
Toll Free Telephone: (877) 252-9262 / Fax: (925) 252-9269
http://www.mccampbell.com / E-mail: main@mccampbell.com

Quality Control Report

Client:	AEW Engineering, Inc.	**WorkOrder:**	1602A52
Date Prepared:	2/26/16	**BatchID:**	117280
Date Analyzed:	3/2/16	**Extraction Method:**	SW3550B/3640A
Instrument:	GC17	**Analytical Method:**	SW8270C
Matrix:	Soil	**Unit:**	mg/Kg
Project:	2015-29; Sausalito Gate 5 Characterization	**Sample ID:**	MB/LCS-117280

QC Summary Report for SW8270C w/ GPC Clean Up

Analyte	MB Result	LCS Result	MDL	RL	SPK Val	MB SS %REC	LCS %REC	LCS Limits
Acenaphthene	ND	3.16	0.14	0.25	5	-	63	30-130
Acenaphthylene	ND	-	0.14	0.25	-	-	-	-
Acetochlor	ND	-	0.25	0.25	-	-	-	-
Anthracene	ND	-	0.14	0.25	-	-	-	-
Benzidine	ND	-	0.23	1.3	-	-	-	-
Benzo (a) anthracene	ND	-	0.14	0.25	-	-	-	-
Benzo (b) fluoranthene	ND	-	0.14	0.25	-	-	-	-
Benzo (k) fluoranthene	ND	-	0.16	0.25	-	-	-	-
Benzo (g,h,i) perylene	ND	-	0.15	0.25	-	-	-	-
Benzo (a) pyrene	ND	-	0.14	0.25	-	-	-	-
Benzyl Alcohol	ND	-	0.51	1.3	-	-	-	-
1,1-Biphenyl	ND	-	0.15	0.25	-	-	-	-
Bis (2-chloroethoxy) Methane	ND	-	0.14	0.25	-	-	-	-
Bis (2-chloroethyl) Ether	ND	-	0.13	0.25	-	-	-	-
Bis (2-chloroisopropyl) Ether	ND	-	0.12	0.25	-	-	-	-
Bis (2-ethylhexyl) Adipate	ND	-	0.25	0.25	-	-	-	-
Bis (2-ethylhexyl) Phthalate	ND	-	0.13	0.25	-	-	-	-
4-Bromophenyl Phenyl Ether	ND	-	0.16	0.25	-	-	-	-
Butylbenzyl Phthalate	ND	-	0.13	0.25	-	-	-	-
4-Chloroaniline	ND	-	0.13	0.25	-	-	-	-
4-Chloro-3-methylphenol	ND	3.49	0.12	0.25	5	-	70	30-130
2-Chloronaphthalene	ND	-	0.16	0.25	-	-	-	-
2-Chlorophenol	ND	3.75	0.14	0.25	5	-	75	30-130
4-Chlorophenyl Phenyl Ether	ND	-	0.15	0.25	-	-	-	-
Chrysene	ND	-	0.14	0.25	-	-	-	-
Dibenzo (a,h) anthracene	ND	-	0.16	0.25	-	-	-	-
Dibenzofuran	ND	-	0.13	0.25	-	-	-	-
Di-n-butyl Phthalate	ND	-	0.13	0.25	-	-	-	-
1,2-Dichlorobenzene	ND	-	0.12	0.25	-	-	-	-
1,3-Dichlorobenzene	ND	-	0.14	0.25	-	-	-	-
1,4-Dichlorobenzene	ND	3.50	0.13	0.25	5	-	70	30-130
3,3-Dichlorobenzidine	ND	-	0.12	0.50	-	-	-	-
2,4-Dichlorophenol	ND	-	0.13	0.25	-	-	-	-
Diethyl Phthalate	ND	-	0.14	0.25	-	-	-	-
2,4-Dimethylphenol	ND	-	0.13	0.25	-	-	-	-
Dimethyl Phthalate	ND	-	0.14	0.25	-	-	-	-
4,6-Dinitro-2-methylphenol	ND	-	0.13	1.3	-	-	-	-

(Cont.)

McCampbell Analytical, Inc.
"When Quality Counts"

1534 Willow Pass Road, Pittsburg, CA 94565-1701
Toll Free Telephone: (877) 252-9262 / Fax: (925) 252-9269
http://www.mccampbell.com / E-mail: main@mccampbell.com

Quality Control Report

Client:	AEW Engineering, Inc.	**WorkOrder:**	1602A52
Date Prepared:	2/26/16	**BatchID:**	117280
Date Analyzed:	3/2/16	**Extraction Method:**	SW3550B/3640A
Instrument:	GC17	**Analytical Method:**	SW8270C
Matrix:	Soil	**Unit:**	mg/Kg
Project:	2015-29; Sausalito Gate 5 Characterization	**Sample ID:**	MB/LCS-117280

QC Summary Report for SW8270C w/ GPC Clean Up

Analyte	MB Result	LCS Result	MDL	RL	SPK Val	MB SS %REC	LCS %REC	LCS Limits
2,4-Dinitrophenol	ND	-	1.3	6.3	-	-	-	-
2,4-Dinitrotoluene	ND	3.41	0.13	0.25	5	-	68	30-130
2,6-Dinitrotoluene	ND	-	0.14	0.25	-	-	-	-
Di-n-octyl Phthalate	ND	-	0.14	0.50	-	-	-	-
1,2-Diphenylhydrazine	ND	-	0.16	0.25	-	-	-	-
Fluoranthene	ND	-	0.13	0.25	-	-	-	-
Fluorene	ND	-	0.14	0.25	-	-	-	-
Hexachlorobenzene	ND	-	0.17	0.25	-	-	-	-
Hexachlorobutadiene	ND	-	0.15	0.25	-	-	-	-
Hexachlorocyclopentadiene	ND	-	0.73	1.3	-	-	-	-
Hexachloroethane	ND	-	0.14	0.25	-	-	-	-
Indeno (1,2,3-cd) pyrene	ND	-	0.14	0.25	-	-	-	-
Isophorone	ND	-	0.12	0.25	-	-	-	-
2-Methylnaphthalene	ND	-	0.14	0.25	-	-	-	-
2-Methylphenol (o-Cresol)	ND	-	0.14	0.25	-	-	-	-
3 & 4-Methylphenol (m,p-Cresol)	ND	-	0.12	0.25	-	-	-	-
Naphthalene	ND	-	0.13	0.25	-	-	-	-
2-Nitroaniline	ND	-	0.62	1.3	-	-	-	-
3-Nitroaniline	ND	-	0.59	1.3	-	-	-	-
4-Nitroaniline	ND	-	0.55	1.3	-	-	-	-
Nitrobenzene	ND	-	0.14	1.3	-	-	-	-
2-Nitrophenol	ND	-	0.64	1.3	-	-	-	-
4-Nitrophenol	ND	2.92	0.41	1.3	5	-	58	30-130
N-Nitrosodiphenylamine	ND	-	0.16	0.25	-	-	-	-
N-Nitrosodi-n-propylamine	ND	3.31	0.13	0.25	5	-	66	30-130
Pentachlorophenol	ND	4.73	0.061	1.3	5	-	95	30-130
Phenanthrene	ND	-	0.14	0.25	-	-	-	-
Phenol	ND	3.56	0.12	0.25	5	-	71	30-130
Pyrene	ND	3.73	0.13	0.25	5	-	75	30-130
1,2,4-Trichlorobenzene	ND	3.65	0.14	0.25	5	-	73	30-130
2,4,5-Trichlorophenol	ND	-	0.12	0.25	-	-	-	-
2,4,6-Trichlorophenol	ND	-	0.14	0.25	-	-	-	-

(Cont.)

McCampbell Analytical, Inc.
"When Quality Counts"

1534 Willow Pass Road, Pittsburg, CA 94565-1701
Toll Free Telephone: (877) 252-9262 / Fax: (925) 252-9269
http://www.mccampbell.com / E-mail: main@mccampbell.com

Quality Control Report

Client:	AEW Engineering, Inc.	**WorkOrder:**	1602A52
Date Prepared:	2/26/16	**BatchID:**	117280
Date Analyzed:	3/2/16	**Extraction Method:**	SW3550B/3640A
Instrument:	GC17	**Analytical Method:**	SW8270C
Matrix:	Soil	**Unit:**	mg/Kg
Project:	2015-29; Sausalito Gate 5 Characterization	**Sample ID:**	MB/LCS-117280

QC Summary Report for SW8270C w/ GPC Clean Up

Analyte	MB Result	LCS Result	MDL	RL	SPK Val	MB SS %REC	LCS %REC	LCS Limits
Surrogate Recovery								
2-Fluorophenol	3.94	3.35			5	79	67	30-130
Phenol-d5	3.64	3.21			5	73	64	30-130
Nitrobenzene-d5	3.43	3.09			5	69	62	30-130
2-Fluorobiphenyl	3.08	2.75			5	62	55	30-130
2,4,6-Tribromophenol	2.52	1.96			5	50	39	16-130
4-Terphenyl-d14	3.50	3.32			5	70	66	30-130

McCampbell Analytical, Inc.
"When Quality Counts"

1534 Willow Pass Road, Pittsburg, CA 94565-1701
Toll Free Telephone: (877) 252-9262 / Fax: (925) 252-9269
http://www.mccampbell.com / E-mail: main@mccampbell.com

Quality Control Report

Client:	AEW Engineering, Inc.	**WorkOrder:**	1602A52
Date Prepared:	2/24/16	**BatchID:**	117203
Date Analyzed:	2/26/16	**Extraction Method:**	SW3050B
Instrument:	ICP-MS2	**Analytical Method:**	SW6020
Matrix:	Soil	**Unit:**	mg/Kg
Project:	2015-29; Sausalito Gate 5 Characterization	**Sample ID:**	MB/LCS-117203 1602A19-001AMS/MSD 1602A19-001APDS

QC Summary Report for Metals

Analyte	MB Result	LCS Result	RL	SPK Val	MB SS %REC	LCS %REC	LCS Limits
Antimony	ND	51.9	0.50	50	-	104	75-125
Arsenic	ND	52.0	0.50	50	-	104	75-125
Barium	ND	540	5.0	500	-	108	75-125
Beryllium	ND	51.9	0.50	50	-	104	75-125
Cadmium	ND	52.8	0.25	50	-	106	75-125
Chromium	ND	51.8	0.50	50	-	103	75-125
Cobalt	ND	49.4	0.50	50	-	99	75-125
Copper	ND	54.3	0.50	50	-	109	75-125
Lead	ND	48.2	0.50	50	-	96	75-125
Mercury	ND	1.17	0.050	1.25	-	94	75-125
Molybdenum	ND	48.7	0.50	50	-	97	75-125
Nickel	ND	54.1	0.50	50	-	108	75-125
Selenium	ND	51.2	0.50	50	-	102	75-125
Silver	ND	48.8	0.50	50	-	98	75-125
Thallium	ND	49.2	0.50	50	-	98	75-125
Vanadium	ND	51.8	0.50	50	-	104	75-125
Zinc	ND	534	5.0	500	-	107	75-125
Surrogate Recovery							
Terbium	522	519		500	104	104	70-130

(Cont.)

CDPH ELAP 1644 ♦ NELAP 4033ORELAP

QA/QC Officer

McCampbell Analytical, Inc.
"When Quality Counts"

1534 Willow Pass Road, Pittsburg, CA 94565-1701
Toll Free Telephone: (877) 252-9262 / Fax: (925) 252-9269
http://www.mccampbell.com / E-mail: main@mccampbell.com

Quality Control Report

Client:	AEW Engineering, Inc.	**WorkOrder:**	1602A52
Date Prepared:	2/24/16	**BatchID:**	117203
Date Analyzed:	2/26/16	**Extraction Method:**	SW3050B
Instrument:	ICP-MS2	**Analytical Method:**	SW6020
Matrix:	Soil	**Unit:**	mg/Kg
Project:	2015-29; Sausalito Gate 5 Characterization	**Sample ID:**	MB/LCS-117203 1602A19-001AMS/MSD 1602A19-001APDS

QC Summary Report for Metals

Analyte	MS Result	MSD Result	SPK Val	SPKRef Val	MS %REC	MSD %REC	MS/MSD Limits	RPD	RPD Limit
Antimony	57.1	58.3	50	ND<5.0	106	108	75-125	2.03	20
Arsenic	55.3	89.1	50	7.1	96	164,F8	75-125	46.8,F8	20
Barium	768	910	500	280	98	127,F8	75-125	17.0	20
Beryllium	51.3	48.6	50	ND<5.0	101	95	75-125	5.50	20
Cadmium	51.2	50.3	50	ND<2.5	102	101	75-125	1.83	20
Chromium	101	99.5	50	55	92	89	75-125	1.16	20
Cobalt	64.4	83.4	50	17	94	132,F8	75-125	25.7,F8	20
Copper	128	238	50	72	112	331,F8	75-125	59.7,F8	20
Lead	733	970	50	528.7	408,F9	883,F9	75-125	27.9,F8	20
Mercury	9.54	12.0	1.25	9.8	0,F9	170,F9	75-125	NA	20
Molybdenum	48.3	48.8	50	ND<5.0	97	98	75-125	1.03	20
Nickel	95.6	150	50	55	82	191,F8	75-125	44.3,F8	20
Selenium	48.4	46.3	50	ND<5.0	97	93	75-125	4.47	20
Silver	47.3	44.9	50	ND<5.0	95	90	75-125	5.16	20
Thallium	47.4	43.2	50	ND<5.0	95	86	75-125	9.38	20
Vanadium	106	104	50	73	65,F8	62,F8	75-125	1.52	20
Zinc	669	680	500	150	104	106	75-125	1.62	20
Surrogate Recovery									
Terbium	512	494	500		102	99	70-130	3.60	20

Analyte	PDS Result	SPK Val	SPKRef Val	PDS %REC	PDS Limits
Arsenic	59.0	50	7.1	104	80-120
Barium	876	500	280	120	80-120
Cobalt	68.5	50	17	102	80-120
Copper	121	50	72	97	80-120
Lead	612	50	528.7	166	80-120
Nickel	104	50	55	100	80-120
Vanadium	116	50	73	85	80-120

Analyte	DLT Result	DLTRef Val	RPD	RPD Limit
Lead	576	528.7	8.65	10

(Cont.)

CDPH ELAP 1644 ♦ NELAP 4033ORELAP

QA/QC Officer

McCampbell Analytical, Inc.
"When Quality Counts"

1534 Willow Pass Road, Pittsburg, CA 94565-1701
Toll Free Telephone: (877) 252-9262 / Fax: (925) 252-9269
http://www.mccampbell.com / E-mail: main@mccampbell.com

Quality Control Report

Client:	AEW Engineering, Inc.	**WorkOrder:**	1602A52
Date Prepared:	2/24/16	**BatchID:**	117203
Date Analyzed:	2/26/16	**Extraction Method:**	SW3050B
Instrument:	ICP-MS2	**Analytical Method:**	SW6020
Matrix:	Soil	**Unit:**	mg/Kg
Project:	2015-29; Sausalito Gate 5 Characterization	**Sample ID:**	MB/LCS-117203 1602A19-001AMS/MSD 1602A19-001APDS

QC Summary Report for Metals

Analyte	DLT Result	DLTRef Val	RPD	RPD Limit
Mercury	11.6	9.8	16.4	10

(Cont.)

McCampbell Analytical, Inc.
"When Quality Counts"

1534 Willow Pass Road, Pittsburg, CA 94565-1701
Toll Free Telephone: (877) 252-9262 / Fax: (925) 252-9269
http://www.mccampbell.com / E-mail: main@mccampbell.com

Quality Control Report

Client:	AEW Engineering, Inc.	**WorkOrder:**	1602A52
Date Prepared:	2/25/16	**BatchID:**	117248
Date Analyzed:	2/26/16	**Extraction Method:**	SW3050B
Instrument:	ICP-MS1	**Analytical Method:**	SW6020
Matrix:	Soil	**Unit:**	mg/Kg
Project:	2015-29; Sausalito Gate 5 Characterization	**Sample ID:**	MB/LCS-117248 1602A52-014AMS/MSD 1602A52-014APDS

QC Summary Report for Metals

Analyte	MB Result	LCS Result	RL	SPK Val	MB SS %REC	LCS %REC	LCS Limits
Antimony	ND	49.8	0.50	50	-	100	75-125
Arsenic	ND	52.6	0.50	50	-	105	75-125
Barium	ND	529	5.0	500	-	106	75-125
Beryllium	ND	52.4	0.50	50	-	105	75-125
Cadmium	ND	51.6	0.25	50	-	103	75-125
Chromium	ND	51.9	0.50	50	-	104	75-125
Cobalt	ND	54.1	0.50	50	-	108	75-125
Copper	ND	53.9	0.50	50	-	108	75-125
Lead	ND	53.9	0.50	50	-	108	75-125
Mercury	ND	1.22	0.050	1.25	-	97	75-125
Molybdenum	ND	50.2	0.50	50	-	100	75-125
Nickel	ND	53.4	0.50	50	-	107	75-125
Selenium	ND	54.6	0.50	50	-	109	75-125
Silver	ND	51.1	0.50	50	-	102	75-125
Thallium	ND	51.4	0.50	50	-	103	75-125
Vanadium	ND	51.5	0.50	50	-	103	75-125
Zinc	ND	543	5.0	500	-	109	75-125
Surrogate Recovery							
Terbium	505	503		500	101	101	70-130

(Cont.)

CDPH ELAP 1644 ♦ NELAP 4033ORELAP

QA/QC Officer

McCampbell Analytical, Inc.
"When Quality Counts"

1534 Willow Pass Road, Pittsburg, CA 94565-1701
Toll Free Telephone: (877) 252-9262 / Fax: (925) 252-9269
http://www.mccampbell.com / E-mail: main@mccampbell.com

Quality Control Report

Client:	AEW Engineering, Inc.	**WorkOrder:**	1602A52
Date Prepared:	2/25/16	**BatchID:**	117248
Date Analyzed:	2/26/16	**Extraction Method:**	SW3050B
Instrument:	ICP-MS1	**Analytical Method:**	SW6020
Matrix:	Soil	**Unit:**	mg/Kg
Project:	2015-29; Sausalito Gate 5 Characterization	**Sample ID:**	MB/LCS-117248 1602A52-014AMS/MSD 1602A52-014APDS

QC Summary Report for Metals

Analyte	MS Result	MSD Result	SPK Val	SPKRef Val	MS %REC	MSD %REC	MS/MSD Limits	RPD	RPD Limit
Antimony	48.1	51.3	50	ND	96	102	75-125	6.43	20
Arsenic	68.6	13.4	50	12.12	113	3,F8	75-125	135,F8	20
Barium	706	152	500	114.1	118	8,F8	75-125	129,F8	20
Beryllium	53.7	0.838	50	0.5824	106	1,F8	75-125	194,F8	20
Cadmium	50.2	ND	50	ND	100	0,F8	75-125	0	20
Chromium	137	89.1	50	62.45	150,F8	53,F8	75-125	42.6,F8	20
Cobalt	67.4	14.0	50	12.58	110	3,F8	75-125	131,F8	20
Copper	118	36.5	50	29.90	177,F8	13,F8	75-125	106,F8	20
Lead	68.3	10.3	50	9.881	117	1,F8	75-125	147,F8	20
Mercury	1.29	1.31	1.25	0.05750	99	100	75-125	1.31	20
Molybdenum	52.0	54.7	50	4.186	96	101	75-125	4.97	20
Nickel	199	110	50	72.99	252,F8	74,F8	75-125	57.8,F8	20
Selenium	50.5	0.522	50	ND	100	0,F8	75-125	196,F8	20
Silver	49.5	ND	50	ND	99	0,F8	75-125	199,F8	20
Thallium	50.2	ND	50	ND	100	0,F8	75-125	198,F8	20
Vanadium	123	55.6	50	40.48	165,F8	30,F8	75-125	75.5,F8	20
Zinc	610	72.9	500	64.57	109	2,F8	75-125	157,F8	20
Surrogate Recovery									
Terbium	494	516	500		99	103	70-130	4.33	20

Analyte	PDS Result	SPK Val	SPKRef Val	PDS %REC	PDS Limits
Arsenic	64.8	50	12.12	105	80-120
Barium	671	500	114.1	111	80-120
Beryllium	54.8	50	0.5824	108	80-120
Cadmium	52.8	50	ND	105	80-120
Chromium	112	50	62.45	100	80-120
Cobalt	64.0	50	12.58	103	80-120
Copper	81.4	50	29.90	103	80-120
Lead	64.4	50	9.881	109	80-120
Nickel	125	50	72.99	104	80-120
Selenium	53.5	50	ND	106	80-120
Silver	53.9	50	ND	108	80-120
Thallium	53.1	50	ND	106	80-120

(Cont.)

McCampbell Analytical, Inc.
"When Quality Counts"

1534 Willow Pass Road, Pittsburg, CA 94565-1701
Toll Free Telephone: (877) 252-9262 / Fax: (925) 252-9269
http://www.mccampbell.com / E-mail: main@mccampbell.com

Quality Control Report

Client:	AEW Engineering, Inc.	**WorkOrder:**	1602A52
Date Prepared:	2/25/16	**BatchID:**	117248
Date Analyzed:	2/26/16	**Extraction Method:**	SW3050B
Instrument:	ICP-MS1	**Analytical Method:**	SW6020
Matrix:	Soil	**Unit:**	mg/Kg
Project:	2015-29; Sausalito Gate 5 Characterization	**Sample ID:**	MB/LCS-117248 1602A52-014AMS/MSD 1602A52-014APDS

QC Summary Report for Metals

Analyte	PDS Result	SPK Val	SPKRef Val	PDS %REC	PDS Limits
Vanadium	90.0	50	40.48	99	80-120
Zinc	597	500	64.57	106	80-120

McCampbell Analytical, Inc.
"When Quality Counts"

1534 Willow Pass Road, Pittsburg, CA 94565-1701
Toll Free Telephone: (877) 252-9262 / Fax: (925) 252-9269
http://www.mccampbell.com / E-mail: main@mccampbell.com

Quality Control Report

Client:	AEW Engineering, Inc.	**WorkOrder:**	1602A52
Date Prepared:	2/25/16	**BatchID:**	117236
Date Analyzed:	2/25/16	**Extraction Method:**	SW5030B
Instrument:	GC7	**Analytical Method:**	SW8021B/8015Bm
Matrix:	Soil	**Unit:**	mg/Kg
Project:	2015-29; Sausalito Gate 5 Characterization	**Sample ID:**	MB/LCS-117236 1602A42-012AMS/MSD

QC Summary Report for SW8021B/8015Bm

Analyte	MB Result	LCS Result	RL	SPK Val	MB SS %REC	LCS %REC	LCS Limits
TPH(btex)	ND	0.549	0.40	0.60	-	92	70-130
MTBE	ND	0.0797	0.050	0.10	-	80	70-130
Benzene	ND	0.103	0.0050	0.10	-	103	70-130
Toluene	ND	0.0917	0.0050	0.10	-	92	70-130
Ethylbenzene	ND	0.103	0.0050	0.10	-	103	70-130
Xylenes	ND	0.320	0.015	0.30	-	107	70-130
Surrogate Recovery							
2-Fluorotoluene	0.112	0.122		0.10	112	122	70-130

Analyte	MS Result	MSD Result	SPK Val	SPKRef Val	MS %REC	MSD %REC	MS/MSD Limits	RPD	RPD Limit
TPH(btex)	0.482	0.513	0.60	ND	80	85	70-130	6.32	20
MTBE	0.0856	0.0827	0.10	ND	86	83	70-130	3.34	20
Benzene	0.0916	0.0924	0.10	ND	92	92	70-130	0	20
Toluene	0.0837	0.0835	0.10	ND	84	84	70-130	0	20
Ethylbenzene	0.0927	0.0946	0.10	ND	93	95	70-130	1.97	20
Xylenes	0.291	0.293	0.30	ND	96	97	70-130	0.906	20
Surrogate Recovery									
2-Fluorotoluene	0.112	0.112	0.10		112	112	70-130	0	20

(Cont.)

McCampbell Analytical, Inc.
"When Quality Counts"

1534 Willow Pass Road, Pittsburg, CA 94565-1701
Toll Free Telephone: (877) 252-9262 / Fax: (925) 252-9269
http://www.mccampbell.com / E-mail: main@mccampbell.com

Quality Control Report

Client:	AEW Engineering, Inc.	**WorkOrder:**	1602A52
Date Prepared:	2/29/16	**BatchID:**	117357
Date Analyzed:	2/29/16 - 3/1/16	**Extraction Method:**	SW5030B
Instrument:	GC19	**Analytical Method:**	SW8021B/8015Bm
Matrix:	Soil	**Unit:**	mg/Kg
Project:	2015-29; Sausalito Gate 5 Characterization	**Sample ID:**	MB/LCS-117357 1602B73-001AMS/MSD

QC Summary Report for SW8021B/8015Bm

Analyte	MB Result	LCS Result	RL	SPK Val	MB SS %REC	LCS %REC	LCS Limits
TPH(btex)	ND	0.606	0.40	0.60	-	101	70-130
MTBE	ND	0.0880	0.050	0.10	-	88	70-130
Benzene	ND	0.112	0.0050	0.10	-	111	70-130
Toluene	ND	0.114	0.0050	0.10	-	114	70-130
Ethylbenzene	ND	0.116	0.0050	0.10	-	116	70-130
Xylenes	ND	0.373	0.015	0.30	-	124	70-130
Surrogate Recovery							
2-Fluorotoluene	0.115	0.113		0.10	115	113	70-130

Analyte	MS Result	MSD Result	SPK Val	SPKRef Val	MS %REC	MSD %REC	MS/MSD Limits	RPD	RPD Limit
TPH(btex)	0.456	0.459	0.60	ND	76	76	70-130	0	20
MTBE	0.0762	0.0732	0.10	ND	76	73	70-130	4.09	20
Benzene	0.0782	0.0810	0.10	ND	78	81	70-130	3.57	20
Toluene	0.0720	0.0764	0.10	ND	72	76	70-130	5.94	20
Ethylbenzene	0.0827	0.0853	0.10	ND	83	85	70-130	3.04	20
Xylenes	0.257	0.265	0.30	ND	85	87	70-130	2.97	20
Surrogate Recovery									
2-Fluorotoluene	0.102	0.102	0.10		102	103	70-130	0.776	20

McCampbell Analytical, Inc.
"When Quality Counts"

1534 Willow Pass Road, Pittsburg, CA 94565-1701
Toll Free Telephone: (877) 252-9262 / Fax: (925) 252-9269
http://www.mccampbell.com / E-mail: main@mccampbell.com

Quality Control Report

Client:	AEW Engineering, Inc.	**WorkOrder:**	1602A52
Date Prepared:	2/24/16	**BatchID:**	117202
Date Analyzed:	2/25/16	**Extraction Method:**	SW3550B/3630C
Instrument:	GC39A, GC39B	**Analytical Method:**	SW8015B
Matrix:	Soil	**Unit:**	mg/Kg
Project:	2015-29; Sausalito Gate 5 Characterization	**Sample ID:**	MB/LCS-117202 1602A19-001AMS/MSD

QC Report for SW8015B with Silica Gel Clean-Up

Analyte	MB Result	LCS Result	RL	SPK Val	MB SS %REC	LCS %REC	LCS Limits
TPH-Diesel (C10-C23)	ND	42.1	1.0	40	-	105	70-130
TPH-Motor Oil (C18-C36)	ND	-	5.0	-	-	-	-
Surrogate Recovery							
C9	24.7	25.6		25	99	103	62-139

Analyte	MS Result	MSD Result	SPK Val	SPKRef Val	MS %REC	MSD %REC	MS/MSD Limits	RPD	RPD Limit
TPH-Diesel (C10-C23)	NR	NR		39	NR	NR	-	NR	
Surrogate Recovery									
C9	NR	NR			NR	NR	-	NR	

(Cont.)

McCampbell Analytical, Inc.
"When Quality Counts"

1534 Willow Pass Road, Pittsburg, CA 94565-1701
Toll Free Telephone: (877) 252-9262 / Fax: (925) 252-9269
http://www.mccampbell.com / E-mail: main@mccampbell.com

Quality Control Report

Client:	AEW Engineering, Inc.	**WorkOrder:**	1602A52
Date Prepared:	2/25/16	**BatchID:**	117249
Date Analyzed:	2/25/16	**Extraction Method:**	SW3550B/3630C
Instrument:	GC9b	**Analytical Method:**	SW8015B
Matrix:	Soil	**Unit:**	mg/Kg
Project:	2015-29; Sausalito Gate 5 Characterization	**Sample ID:**	MB/LCS-117249 1602A52-013AMS/MSD

QC Report for SW8015B with Silica Gel Clean-Up

Analyte	MB Result	LCS Result	RL	SPK Val	MB SS %REC	LCS %REC	LCS Limits
TPH-Diesel (C10-C23)	ND	45.5	1.0	40	-	114	70-130
TPH-Motor Oil (C18-C36)	ND	-	5.0	-	-	-	-
Surrogate Recovery							
C9	23.8	23.7		25	95	95	62-139

Analyte	MS Result	MSD Result	SPK Val	SPKRef Val	MS %REC	MSD %REC	MS/MSD Limits	RPD	RPD Limit
TPH-Diesel (C10-C23)	31.5	32.4	40	3.556	70	72	70-130	2.96	30
Surrogate Recovery									
C9	25.4	25.7	25		102	103	70-130	1.11	30

McCampbell Analytical, Inc.
1534 Willow Pass Rd
Pittsburg, CA 94565-1701
(925) 252-9262

CHAIN-OF-CUSTODY RECORD

WorkOrder: 1602A52 **ClientCode: AEW**

☐ WaterTrax ☐ WriteOn ☐ EDF ☑ Excel ☐ EQuIS ☑ Email ☑ HardCopy ☐ ThirdParty ☐ J-flag

Report to:
Randy Young
AEW Engineering, Inc.
55 New Montgomery St, Ste 722
San Francisco, CA 94105
(415) 495-8401 FAX: (415) 358-5598

Email: ryoung@aewengineering.com
cc/3rd Party: rmusselman@aewengineering.com;
PO:
ProjectNo: 2015-29; Sausalito Gate 5 Characterization

Bill to:
Kenneth Leung
AEW Engineering, Inc.
55 New Montgomery St, Ste 507
San Francisco, CA 94105
kleung@aewengineering.com; byeung

Requested TAT: 5 days;

Date Received: 02/25/2016
Date Logged: 02/25/2016

Lab ID	Client ID	Matrix	Collection Date	Hold	Requested Tests (See legend below) 1	2	3	4	5	6	7	8	9	10	11	12
1602A52-001	COMP AEW-B1,B2 2.5-5'	Soil	2/24/2016	☐	A	A	A	A	A	A						
1602A52-002	COMP AEW-B1,B2 10-15'	Soil	2/24/2016	☐	A	A	A	A	A	A						
1602A52-003	COMP AEW-B3,B4 2.5-5'	Soil	2/23/2016	☐	A	A	A	A	A	A						
1602A52-004	COMP AEW-B3,4 10-15'	Soil	2/23/2016	☐	A	A	A	A	A	A						
1602A52-005	COMP AEW-B5,B11 2.5-5'	Soil	2/25/2016	☐	A	A	A	A	A	A						
1602A52-006	COMP AEW-B5,B11 10-15'	Soil	2/25/2016	☐	A	A	A	A	A	A						
1602A52-007	COMP AEW-B6,B7 2.5-5'	Soil	2/24/2016	☐	A	A	A	A	A	A						
1602A52-008	COMP AEW-B6,B7 10-15'	Soil	2/24/2016	☐	A	A	A	A	A	A						
1602A52-009	COMP AEW-B8,B9 2.5-5'	Soil	2/24/2016	☐	A	A	A	A	A	A						
1602A52-010	COMP AEW-B8,B9 10-15'	Soil	2/24/2016	☐	A	A	A	A	A	A						
1602A52-011	COMP AEW-B10,B13 2.5-5'	Soil	2/25/2016	☐	A	A	A	A	A	A						
1602A52-012	COMP AEW-B10,B13 10-15'	Soil	2/25/2016	☐	A	A	A	A	A	A						
1602A52-013	COMP AEW-B12,B14 2.5-5'	Soil	2/25/2016	☐	A	A	A	A	A	A						
1602A52-014	COMP AEW-B12,B14 10-15'	Soil	2/25/2016	☐	A	A	A	A	A	A						

Test Legend:

1	8082_PCB_ESL_S (J)	2	8260B_S	3	8270_ESL_S (J)	4	CAM17MS_TTLC_S
5	G-MBTEX_S	6	TPH(DMO)WSG_S	7		8	
9		10		11		12	

Project Manager:

Prepared by: Maria Venegas

Comments: Hold all soil samples for 6mos per Ken Leung 3/14/14

NOTE: Soil samples are discarded 60 days after results are reported unless other arrangements are made (Water samples are 30 days).
Hazardous samples will be returned to client or disposed of at client expense.

McCampbell Analytical, Inc.
"When Quality Counts"

1534 Willow Pass Road, Pittsburg, CA 94565-1701
Toll Free Telephone: (877) 252-9262 / Fax: (925) 252-9269
http://www.mccampbell.com / E-mail: main@mccampbell.com

WORK ORDER SUMMARY

Client Name: AEW ENGINEERING, INC.
QC Level: LEVEL 2
Work Order: 1602A52
Project: 2015-29; Sausalito Gate 5 Characterization
Client Contact: Randy Young
Date Logged: 2/25/2016
Comments: Hold all soil samples for 6mos per Ken Leung 3/14/14
Contact's Email: ryoung@aewengineering.com

☐ WaterTrax ☐ WriteOn ☐ EDF ☑ Excel ☐ Fax ☑ Email ☑ HardCopy ☐ ThirdParty ☐ J-flag

Lab ID	Client ID	Matrix	Test Name	Containers /Composites	Bottle & Preservative	De-chlorinated	Collection Date & Time	TAT	Sediment Content	Hold	SubOut
1602A52-001A	COMP AEW-B1,B2 2.5-5'	Soil	SW8015B (TPH-d,mo w/ S.G. Clean-Up)	4 / (4:1)	Acetate Liner	☐	2/24/2016	5 days		☐	
			SW8021B/8015Bm (G/MBTEX)			☐		5 days		☐	
			SW6020 (CAM 17)			☐		5 days		☐	
			SW8270C (SVOCs)			☐		5 days		☐	
			SW8260B (VOCs)			☐		5 days		☐	
			SW8082 (PCBs Only)			☐		5 days		☐	
1602A52-002A	COMP AEW-B1,B2 10-15'	Soil	SW8015B (TPH-d,mo w/ S.G. Clean-Up)	4 / (4:1)	Acetate Liner	☐	2/24/2016	5 days		☐	
			SW8021B/8015Bm (G/MBTEX)			☐		5 days		☐	
			SW6020 (CAM 17)			☐		5 days		☐	
			SW8270C (SVOCs)			☐		5 days		☐	
			SW8260B (VOCs)			☐		5 days		☐	
			SW8082 (PCBs Only)			☐		5 days		☐	
1602A52-003A	COMP AEW-B3,B4 2.5-5'	Soil	SW8015B (TPH-d,mo w/ S.G. Clean-Up)	4 / (4:1)	Acetate Liner	☐	2/23/2016	5 days		☐	
			SW8021B/8015Bm (G/MBTEX)			☐		5 days		☐	
			SW6020 (CAM 17)			☐		5 days		☐	
			SW8270C (SVOCs)			☐		5 days		☐	

NOTES: - STLC and TCLP extractions require 2 days to complete; therefore, all TATs begin after the extraction is completed (i.e., One-day TAT yields results in 3 days from sample submission).

- MAI assumes that all material present in the provided sampling container is considered part of the sample - MAI does not exclude any material from the sample prior to sample preparation unless requested in writing by the client.

McCampbell Analytical, Inc.
"When Quality Counts"

1534 Willow Pass Road, Pittsburg, CA 94565-1701
Toll Free Telephone: (877) 252-9262 / Fax: (925) 252-9269
http://www.mccampbell.com / E-mail: main@mccampbell.com

WORK ORDER SUMMARY

Client Name: AEW ENGINEERING, INC.
QC Level: LEVEL 2
Work Order: 1602A52
Project: 2015-29; Sausalito Gate 5 Characterization
Client Contact: Randy Young
Date Logged: 2/25/2016
Comments: Hold all soil samples for 6mos per Ken Leung 3/14/14
Contact's Email: ryoung@aewengineering.com

☐ WaterTrax ☐ WriteOn ☐ EDF ☑ Excel ☐ Fax ☑ Email ☑ HardCopy ☐ ThirdParty ☐ J-flag

Lab ID	Client ID	Matrix	Test Name	Containers /Composites	Bottle & Preservative	De-chlorinated	Collection Date & Time	TAT	Sediment Content	Hold	SubOut
1602A52-003A	COMP AEW-B3,B4 2.5-5'	Soil	SW8260B (VOCs)	4 / (4:1)	Acetate Liner	☐	2/23/2016	5 days		☐	
			SW8082 (PCBs Only)			☐		5 days		☐	
1602A52-004A	COMP AEW-B3,4 10-15'	Soil	SW8015B (TPH-d,mo w/ S.G. Clean-Up)	4 / (4:1)	Acetate Liner	☐	2/23/2016	5 days		☐	
			SW8021B/8015Bm (G/MBTEX)			☐		5 days		☐	
			SW6020 (CAM 17)			☐		5 days		☐	
			SW8270C (SVOCs)			☐		5 days		☐	
			SW8260B (VOCs)			☐		5 days		☐	
			SW8082 (PCBs Only)			☐		5 days		☐	
1602A52-005A	COMP AEW-B5,B11 2.5-5'	Soil	SW8015B (TPH-d,mo w/ S.G. Clean-Up)	4 / (4:1)	Acetate Liner	☐	2/25/2016	5 days		☐	
			SW8021B/8015Bm (G/MBTEX)			☐		5 days		☐	
			SW6020 (CAM 17)			☐		5 days		☐	
			SW8270C (SVOCs)			☐		5 days		☐	
			SW8260B (VOCs)			☐		5 days		☐	
			SW8082 (PCBs Only)			☐		5 days		☐	
1602A52-006A	COMP AEW-B5,B11 10-15'	Soil	SW8015B (TPH-d,mo w/ S.G. Clean-Up)	4 / (4:1)	Acetate Liner	☐	2/25/2016	5 days		☐	
			SW8021B/8015Bm (G/MBTEX)			☐		5 days		☐	

NOTES: - STLC and TCLP extractions require 2 days to complete; therefore, all TATs begin after the extraction is completed (i.e., One-day TAT yields results in 3 days from sample submission).

- MAI assumes that all material present in the provided sampling container is considered part of the sample - MAI does not exclude any material from the sample prior to sample preparation unless requested in writing by the client.

McCampbell Analytical, Inc.
"When Quality Counts"

1534 Willow Pass Road, Pittsburg, CA 94565-1701
Toll Free Telephone: (877) 252-9262 / Fax: (925) 252-9269
http://www.mccampbell.com / E-mail: main@mccampbell.com

WORK ORDER SUMMARY

Client Name: AEW ENGINEERING, INC.
QC Level: LEVEL 2
Work Order: 1602A52
Project: 2015-29; Sausalito Gate 5 Characterization
Client Contact: Randy Young
Date Logged: 2/25/2016
Comments: Hold all soil samples for 6mos per Ken Leung 3/14/14
Contact's Email: ryoung@aewengineering.com

☐ WaterTrax ☐ WriteOn ☐ EDF ☑ Excel ☐ Fax ☑ Email ☑ HardCopy ☐ ThirdParty ☐ J-flag

Lab ID	Client ID	Matrix	Test Name	Containers /Composites	Bottle & Preservative	De-chlorinated	Collection Date & Time	TAT	Sediment Content	Hold	SubOut
1602A52-006A	COMP AEW-B5,B11 10-15'	Soil	SW6020 (CAM 17)	4 / (4:1)	Acetate Liner	☐	2/25/2016	5 days		☐	
			SW8270C (SVOCs)			☐		5 days		☐	
			SW8260B (VOCs)			☐		5 days		☐	
			SW8082 (PCBs Only)			☐		5 days		☐	
1602A52-007A	COMP AEW-B6,B7 2.5-5'	Soil	SW8015B (TPH-d,mo w/ S.G. Clean-Up)	4 / (4:1)	Acetate Liner	☐	2/24/2016	5 days		☐	
			SW8021B/8015Bm (G/MBTEX)			☐		5 days		☐	
			SW6020 (CAM 17)			☐		5 days		☐	
			SW8270C (SVOCs)			☐		5 days		☐	
			SW8260B (VOCs)			☐		5 days		☐	
			SW8082 (PCBs Only)			☐		5 days		☐	
1602A52-008A	COMP AEW-B6,B7 10-15'	Soil	SW8015B (TPH-d,mo w/ S.G. Clean-Up)	4 / (4:1)	Acetate Liner	☐	2/24/2016	5 days		☐	
			SW8021B/8015Bm (G/MBTEX)			☐		5 days		☐	
			SW6020 (CAM 17)			☐		5 days		☐	
			SW8270C (SVOCs)			☐		5 days		☐	
			SW8260B (VOCs)			☐		5 days		☐	
			SW8082 (PCBs Only)			☐		5 days		☐	

NOTES: - STLC and TCLP extractions require 2 days to complete; therefore, all TATs begin after the extraction is completed (i.e., One-day TAT yields results in 3 days from sample submission).

- MAI assumes that all material present in the provided sampling container is considered part of the sample - MAI does not exclude any material from the sample prior to sample preparation unless requested in writing by the client.

McCampbell Analytical, Inc.
"When Quality Counts"

1534 Willow Pass Road, Pittsburg, CA 94565-1701
Toll Free Telephone: (877) 252-9262 / Fax: (925) 252-9269
http://www.mccampbell.com / E-mail: main@mccampbell.com

WORK ORDER SUMMARY

Client Name: AEW ENGINEERING, INC.
Project: 2015-29; Sausalito Gate 5 Characterization
Comments: Hold all soil samples for 6mos per Ken Leung 3/14/14

QC Level: LEVEL 2
Client Contact: Randy Young
Contact's Email: ryoung@aewengineering.com

Work Order: 1602A52
Date Logged: 2/25/2016

☐ WaterTrax ☐ WriteOn ☐ EDF ☑ Excel ☐ Fax ☑ Email ☑ HardCopy ☐ ThirdParty ☐ J-flag

Lab ID	Client ID	Matrix	Test Name	Containers /Composites	Bottle & Preservative	De-chlorinated	Collection Date & Time	TAT	Sediment Content	Hold	SubOut
1602A52-009A	COMP AEW-B8,B9 2.5-5'	Soil	SW8015B (TPH-d,mo w/ S.G. Clean-Up)	4 / (4:1)	Acetate Liner	☐	2/24/2016	5 days		☐	
			SW8021B/8015Bm (G/MBTEX)			☐		5 days		☐	
			SW6020 (CAM 17)			☐		5 days		☐	
			SW8270C (SVOCs)			☐		5 days		☐	
			SW8260B (VOCs)			☐		5 days		☐	
			SW8082 (PCBs Only)			☐		5 days		☐	
1602A52-010A	COMP AEW-B8,B9 10-15'	Soil	SW8015B (TPH-d,mo w/ S.G. Clean-Up)	4 / (4:1)	Acetate Liner	☐	2/24/2016	5 days		☐	
			SW8021B/8015Bm (G/MBTEX)			☐		5 days		☐	
			SW6020 (CAM 17)			☐		5 days		☐	
			SW8270C (SVOCs)			☐		5 days		☐	
			SW8260B (VOCs)			☐		5 days		☐	
			SW8082 (PCBs Only)			☐		5 days		☐	
1602A52-011A	COMP AEW-B10,B13 2.5-5'	Soil	SW8015B (TPH-d,mo w/ S.G. Clean-Up)	4 / (4:1)	Acetate Liner	☐	2/25/2016	5 days		☐	
			SW8021B/8015Bm (G/MBTEX)			☐		5 days		☐	
			SW6020 (CAM 17)			☐		5 days		☐	
			SW8270C (SVOCs)			☐		5 days		☐	

NOTES: - STLC and TCLP extractions require 2 days to complete; therefore, all TATs begin after the extraction is completed (i.e., One-day TAT yields results in 3 days from sample submission).

- MAI assumes that all material present in the provided sampling container is considered part of the sample - MAI does not exclude any material from the sample prior to sample preparation unless requested in writing by the client.

McCampbell Analytical, Inc.
"When Quality Counts"

1534 Willow Pass Road, Pittsburg, CA 94565-1701
Toll Free Telephone: (877) 252-9262 / Fax: (925) 252-9269
http://www.mccampbell.com / E-mail: main@mccampbell.com

WORK ORDER SUMMARY

Client Name: AEW ENGINEERING, INC.
QC Level: LEVEL 2
Work Order: 1602A52
Project: 2015-29; Sausalito Gate 5 Characterization
Client Contact: Randy Young
Date Logged: 2/25/2016
Comments: Hold all soil samples for 6mos per Ken Leung 3/14/14
Contact's Email: ryoung@aewengineering.com

☐ WaterTrax ☐ WriteOn ☐ EDF ☑ Excel ☐ Fax ☑ Email ☑ HardCopy ☐ ThirdParty ☐ J-flag

Lab ID	Client ID	Matrix	Test Name	Containers /Composites	Bottle & Preservative	De-chlorinated	Collection Date & Time	TAT	Sediment Content	Hold	SubOut
1602A52-011A	COMP AEW-B10,B13 2.5-5'	Soil	SW8260B (VOCs)	4 / (4:1)	Acetate Liner	☐	2/25/2016	5 days		☐	
			SW8082 (PCBs Only)			☐		5 days		☐	
1602A52-012A	COMP AEW-B10,B13 10-15'	Soil	SW8015B (TPH-d,mo w/ S.G. Clean-Up)	4 / (4:1)	Acetate Liner	☐	2/25/2016	5 days		☐	
			SW8021B/8015Bm (G/MBTEX)			☐		5 days		☐	
			SW6020 (CAM 17)			☐		5 days		☐	
			SW8270C (SVOCs)			☐		5 days		☐	
			SW8260B (VOCs)			☐		5 days		☐	
			SW8082 (PCBs Only)			☐		5 days		☐	
1602A52-013A	COMP AEW-B12,B14 2.5-5'	Soil	SW8015B (TPH-d,mo w/ S.G. Clean-Up)	4 / (4:1)	Acetate Liner	☐	2/25/2016	5 days		☐	
			SW8021B/8015Bm (G/MBTEX)			☐		5 days		☐	
			SW6020 (CAM 17)			☐		5 days		☐	
			SW8270C (SVOCs)			☐		5 days		☐	
			SW8260B (VOCs)			☐		5 days		☐	
			SW8082 (PCBs Only)			☐		5 days		☐	
1602A52-014A	COMP AEW-B12,B14 10-15'	Soil	SW8015B (TPH-d,mo w/ S.G. Clean-Up)	4 / (4:1)	Acetate Liner	☐	2/25/2016	5 days		☐	
			SW8021B/8015Bm (G/MBTEX)			☐		5 days		☐	

NOTES: - STLC and TCLP extractions require 2 days to complete; therefore, all TATs begin after the extraction is completed (i.e., One-day TAT yields results in 3 days from sample submission).

- MAI assumes that all material present in the provided sampling container is considered part of the sample - MAI does not exclude any material from the sample prior to sample preparation unless requested in writing by the client.

McCampbell Analytical, Inc.
"When Quality Counts"

1534 Willow Pass Road, Pittsburg, CA 94565-1701
Toll Free Telephone: (877) 252-9262 / Fax: (925) 252-9269
http://www.mccampbell.com / E-mail: main@mccampbell.com

WORK ORDER SUMMARY

Client Name: AEW ENGINEERING, INC.
Project: 2015-29; Sausalito Gate 5 Characterization
Comments: Hold all soil samples for 6mos per Ken Leung 3/14/14

QC Level: LEVEL 2
Client Contact: Randy Young
Contact's Email: ryoung@aewengineering.com

Work Order: 1602A52
Date Logged: 2/25/2016

☐ WaterTrax ☐ WriteOn ☐ EDF ☑ Excel ☐ Fax ☑ Email ☑ HardCopy ☐ ThirdParty ☐ J-flag

Lab ID	Client ID	Matrix	Test Name	Containers /Composites	Bottle & Preservative	De-chlorinated	Collection Date & Time	TAT	Sediment Content	Hold	SubOut
1602A52-014A	COMP AEW-B12,B14 10-15'	Soil	SW6020 (CAM 17)	4 / (4:1)	Acetate Liner	☐	2/25/2016	5 days		☐	
			SW8270C (SVOCs)			☐		5 days		☐	
			SW8260B (VOCs)			☐		5 days		☐	
			SW8082 (PCBs Only)			☐		5 days		☐	

NOTES: - STLC and TCLP extractions require 2 days to complete; therefore, all TATs begin after the extraction is completed (i.e., One-day TAT yields results in 3 days from sample submission).

- MAI assumes that all material present in the provided sampling container is considered part of the sample - MAI does not exclude any material from the sample prior to sample preparation unless requested in writing by the client.

1602A52

AEW ENGINEERING, INC.

55 New Montgomery Street, Suite 722, San Francisco, CA 94105

Telephone: (415) 495-8422 Fax: (415) 358-5598

CHAIN OF CUSTODY RECORD

TURN AROUND TIME: ☐ 24 HOURS ☐ 48 HOURS ☐ 1 WEEK ☒ Normal Others:

LABORATORY: McCampbell Analytical

Date: 2/25/16

Report To: Randall Young, Ryder Musselman eMail: ryoung@aewengineering.com

Company: AEW Engineering, Inc. eMail: rmusselman@aewengineering.com

Project Name: Sausalito Gate 5 Characterization Location: Sausalito

Sampler: Randall Young, Ryder Musselman Project No.: 2015-29

Sampler: Signature: Bill To: Kenneth Leung

Reporting Requirement: Hard Copy : Yes ☑ No ☐

PDF File: Yes ☑ No ☐ EXCEL Yes ☑ No ☐

SAMPLE ID	LOCATION	Sampling Date	Sampling Time	# of Containers	Type of Container	Matrix: Water	Soil	Air	Sludge	Other	Method Perserved: Ice	HCl	HNO_3	Other	TPH - Gas, BTEX,& MTBE (EPA 8015 Mod)	TPH-Diesel and Motor Oil w/Silica Gel (EPA 8015 Mod)	VOCs (EPA 8260)	SVOCs (EPA 8270) WITH FLORISIL CLEANUP *	Pesticides (8081/8082) WITH FLORISIL CLEANUP*	PCBs (8081/8082) WITH FLORISIL CLEANUP*	Title 22 Metals (EPA 6000/7000)	Other	Comments
AEW-B1 2.5'	GATE 5 RD.	2/24/16	12:30	1	LINER		X				X				X	X	X	X	X	X	X		COMP AEW-B1, B2 2.5-5'
AEW-B1 5'			12:34	1			X				X												
AEW-B2 2.5'			10:35	1			X				X												
AEW-B2 5'			10:40	1			X				X												
AEW-B1 10'			12:45	1			X				X				X	X	X	X	X	X	X		COMP AEW-B1, B2 10-15'
AEW-B1 15'			13:02	1			X				X												
AEW-B2 10'			10:50	1			X				X												
AEW-B2 15'			11:00	1			X				X												

ICE/t° 3.9
GOOD CONDITION
HEAD SPACE ABSENT
DECHLORINATED IN LAB
APPROPRIATE CONTAINERS
PRESERVED IN LAB
PRESERVATION VOAS | O&G | METALS | OTHER

Relinquished By:	Date:	Time:	Received By:
	2/25/16	11:55	
	2-25-16	1720	

*Need to achieve ESLs. Please run all applicable clean-ups to achieve ESLs. Please do not dilute samples. Please contact Randall Young @ (415) 495-8401 if you have any questions. Please hold all samples for 6 months for further analysis.

AEW ENGINEERING, INC.

55 New Montgomery Street, Suite 722, San Francisco, CA 94105
Telephone: (415) 495-8422 Fax: (415) 358-5598

CHAIN OF CUSTODY RECORD

TURN AROUND TIME: ☐ 24 HOURS ☐ 48 HOURS ☐ 1 WEEK ☒ Normal Others:

LABORATORY: McCampbell Analytical

Date: 2/25/16

Report To: Randall Young, Ryder Musselman eMail: ryoung@aewengineering.com
Company: AEW Engineering, Inc. eMail: rmusselman@aewengineering.com
Project Name: Sausalito Gate 5 Characterization Location: Sausalito
Sampler: Randall Young, Ryder Musselman Project No.: 2015-29
Sampler: Signature: Bill To: Kenneth Leung
Reporting Requirement: Hard Copy : Yes ☑ No ☐
PDF File: Yes ☑ No ☐ EXCEL Yes ☑ No ☐

SAMPLE ID	LOCATION	Sampling Date	Sampling Time	# of Containers	Type of Container	Matrix: Water	Soil	Air	Sludge	Other	Method Preserved: Ice	HCl	HNO_3	Other	TPH - Gas, BTEX,& MTBE (EPA 8015 Mod)	TPH-Diesel and Motor Oil w/Silica Gel (EPA 8015 Mod)	VOCs (EPA 8260)	SVOCs (EPA 8270) WITH FLORISIL CLEANUP *	~~Pesticides (8081/8082) WITH FLORISIL CLEANUP~~	PCBs (8081/8082) WITH FLORISIL CLEANUP*	Title 22 Metals (EPA 6000/7000)	Other	Comments
AEW-B3 2.5'	GATE 5 RD	2/23/16	14:51	1	LINER		X				X				X	X	X	X	X	X	X		AEW COMP B3, B4 2.5-5'
AEW-B3 5'			15:00	1			X				X												
AEW-B4 2.5'			13:58	1			X				X												
AEW-B4 5'			14:12	1			X				X												
AEW-B3 10'			15:12	1			X				X				X	X	X	X	X	X	X		AEW COMP B3, B4 10-15'
AEW-B3 15'			15:16	1			X				X												
AEW-B4 10'			14:20	1			X				X												
AEW-B4 15'			14:22	1			X				X												

Relinquished By:	Date:	Time:	Received By:
	2/25/16	11:55	
	2-25-16	1520	

*Need to achieve ESLs. Please run all applicable clean-ups to achieve ESLs. Please do not dilute samples. Please contact Randall Young @ (415) 495-8401 if you have any questions. Please hold all samples for 6 months for further analysis.

AEW ENGINEERING, INC.

55 New Montgomery Street, Suite 722, San Francisco, CA 94105
Telephone: (415) 495-8422 Fax: (415) 358-5598

CHAIN OF CUSTODY RECORD

TURN AROUND TIM: ☐ 24 HOURS ☐ 48 HOURS ☐ 1 WEEK ☒ Normal Others:

LABORATORY: McCampbell Analytica

Date: 2/25/16

Report To: Randall Young, Ryder Musselman eMail: ryoung@aewengineering.com
Company: AEW Engineering, Inc. eMail: rmusselman@aewengineering.co
Project Name: Sausalito Gate 5 Characterization Location: Sausalito
Sampler: Randall Young, Ryder Musselman Project No.: 2015-29
Sampler: Signature: Bill To: Kenneth Leung
Reporting Requirement: Hard Copy : Yes ☑ No ☐
PDF File: Yes ☑ No ☐ EXCEL Yes ☑ No ☐

SAMPLE ID	LOCATION	Sampling Date	Sampling Time	# of Containers	Type of Container	Matrix: Water	Soil	Air	Sludge	Other	Method Preserved: Ice	HCl	HNO_3	Other	TPH - Gas, BTEX,& MTBE (EPA 8015 Mod)	TPH-Diesel and Motor Oil w/Silica Gel (EPA 8015 Mod)	VOCs (EPA 8260)	SVOCs (EPA 8270) WITH FLORISIL CLEANUP *	~~Pesticides (8081/8082) WITH FLORISIL CLEANUP*~~	PCBs (8081/8082) WITH FLORISIL CLEANUP*	Title 22 Metals (EPA 6000/7000)	Other	Comments
AEW-B5 2.5'	GATE 5 RD	2/23/16	12:55	1	LINER		X				X				X	X	X	X		X	X		AEW COMP B5, B11 2.5-5'
AEW-B5 5'	↓	↓	13:15	1	↓		X				X				X	X	X	X		X	X		
AEW-B11 2.5'	↓	2/25/16	8:46	1	↓		X				X				X	X	X	X		X	X		
AEW-B11 5'	↓	↓	8:54	1	↓		X				X				X	X	X	X		X	X		
AEW-B5 10'	↓	2/23/16	13:20	1	↓		X				X				X	X	X	X		X	X		AEW COMP B5, B11 10-15'
AEW-B5 15'	↓	↓	13:25	1	↓		X				X				X	X	X	X		X	X		
AEW-B11 10'	↓	2/25/16	9:06	1	↓		X				X				X	X	X	X		X	X		
AEW-B11 15'	↓	↓	9:11	1	↓		X				X				X	X	X	X		X	X		

Relinquished By:	Date:	Time:	Received By:
	2/25/16	11:55	
	2-25-16	15:20	

*Need to achieve ESLs. Please run all applicable clean-ups to achieve ESLs. Please do not dilute samples. Please contact Randall Young @ (415) 495-8401 if you have any questions. Please hold all samples for 6 months for further analysis.

AEW ENGINEERING, INC.
55 New Montgomery Street, Suite 722, San Francisco, CA 94105
Telephone: (415) 495-8422 Fax: (415) 358-5598

CHAIN OF CUSTODY RECORD

TURN AROUND TIME: ☐ 24 HOURS ☐ 48 HOURS ☐ 1 WEEK ☒ Normal Others:

LABORATORY: McCampbell Analytical

Date: 2/25/16

Report To: Randall Young, Ryder Musselman eMail: ryoung@aewengineering.com
Company: AEW Engineering, Inc. eMail: rmusselman@aewengineering.com
Project Name: Sausalito Gate 5 Characterization Location: Sausalito
Sampler: Randall Young, Ryder Musselman Project No.: 2015-29
Sampler: Signature: Bill To: Kenneth Leung
Reporting Requirement: Hard Copy : Yes ☑ No ☐
PDF File: Yes ☑ No ☐ EXCEL Yes ☑ No ☐

SAMPLE ID	LOCATION	Sampling Date	Sampling Time	# of Containers	Type of Container	Matrix: Water	Matrix: Soil	Matrix: Air	Matrix: Sludge	Matrix: Other	Method Preserved: Ice	Method Preserved: HCl	Method Preserved: HNO_3	Method Preserved: Other	TPH - Gas, BTEX,& MTBE (EPA 8015 Mod)	TPH-Diesel and Motor Oil w/Silica Gel (EPA 8015 Mod)	VOCs (EPA 8260)	SVOCs (EPA 8270) WITH FLORISIL CLEANUP *	~~Pesticides (8081/8082) WITH FLORISIL CLEANUP*~~	PCBs (8081/8082) WITH FLORISIL CLEANUP*	Title 22 Metals (EPA 6000/7000)	Other	Comments
AEW-B6 2.5'	GATE 5 RD	2/24/16	9:20	1	unpr		X				X				X	X	X	X		X	X		AEW comp B6, B7 2.5-5'
AEW-B6 5'	↓	↓	9:50	1	↓		X				X				X	X	X	X		X	X		
AEW-B7 2.5'			13:30	1			X				X				X	X	X	X		X	X		
AEW-B7 5'			13:55	1			X				X				X	X	X	X		X	X		
AEW-B6 10'			9:55	1			X				X				X	X	X	X		X	X		AEW comp B6, B7 10-15'
AEW-B6 15'			10:00	1			X				X				X	X	X	X		X	X		
AEW-B7 10'			14:00	1			X				X				X	X	X	X		X	X		
AEW-B7 15'	↓	↓	14:05	1	↓		X				X				X	X	X	X		X	X		

Relinquished By:	Date:	Time:	Received By:
	2/25/16	11:55	
	2-25-16	1520	

*Need to achieve ESLs. Please run all applicable clean-ups to achieve ESLs. Please do not dilute samples. Please contact Randall Young @ (415) 495-8401 if you have any questions. Please hold all samples for 6 months for further analysis.

AEW ENGINEERING, INC.

55 New Montgomery Street, Suite 722, San Francisco, CA 94105

Telephone: (415) 495-8422 Fax: (415) 358-5598

CHAIN OF CUSTODY RECORD

TURN AROUND TIM: ☐ 24 HOURS ☐ 48 HOURS ☐ 1 WEEK ☒ Normal Others:

LABORATORY: McCampbell Analytical

Date: 2/25/16

Report To: Randall Young, Ryder Musselman eMail: ryoung@aewengineering.com

Company: AEW Engineering, Inc. eMail: rmusselman@aewengineering.co

Project Name: Sausalito Gate 5 Characterization Location: Sausalito

Sampler: Randall Young, Ryder Musselman Project No.: 2015-29

Sampler: Signature: Bill To: Kenneth Leung

Reporting Requirement: Hard Copy : Yes ☑ No ☐

PDF File: Yes ☑ No ☐ EXCEL Yes ☑ No ☐

SAMPLE ID	LOCATION	Sampling Date	Sampling Time	# of Containers	Type of Container	Matrix: Water	Soil	Air	Sludge	Other	Method Perserved: Ice	HCl	HNO_3	Other	TPH - Gas, BTEX,& MTBE (EPA 8015 Mod)	TPH-Diesel and Motor Oil w/Silica Gel (EPA 8015 Mod)	VOCs (EPA 8260)	SVOCs (EPA 8270) WITH FLORISIL CLEANUP*	Pesticides (8081/8082) WITH FLORISIL CLEANUP*	PCBs (8081/8082) WITH FLORISIL CLEANUP*	Title 22 Metals (EPA 6000/7000)	Comments
AEW-B8 2.5'	GATE 5 RD	2/23/16	10:45	1	LINER		X				X				X	X	X	X		X	X	AEW comp B8, B9 2.5-5'
AEW-B8 5'	↓	↓	11:16	1	↓		X				X				X	X	X	X		X	X	
AEW-B9 2.5'	↓	2/24/16	8:03	1	↓		X				X				X	X	X	X		X	X	
AEW-B9 5'	↓	↓	8:19	1	↓		X				X				X	X	X	X		X	X	
AEW-B8 10'	↓	2/23/16	11:23	1	↓		X				X				X	X	X	X		X	X	AEW comp B8, B9 10-15'
AEW-B8 15'	↓	↓	11:28	1	↓		X				X				X	X	X	X		X	X	
AEW-B9 10'	↓	2/24/16	8:30	1	↓		X				X				X	X	X	X		X	X	
AEW-B9 15'	↓	↓	8:34	1	↓		X				X				X	X	X	X		X	X	

Relinquished By:	Date:	Time:	Received By:
	2/25/15	11:55	
	2-25-16	1:20	

*Need to achieve ESLs. Please run all applicable clean-ups to achieve ESLs. Please do not dilute samples. Please contact Randall Young @ (415) 495-8401 if you have any questions. Please hold all samples for 6 months for further analysis.

AEW ENGINEERING, INC.

55 New Montgomery Street, Suite 722, San Francisco, CA 94105

Telephone: (415) 495-8422 Fax: (415) 358-5598

CHAIN OF CUSTODY RECORD

TURN AROUND TIME: ☐ 24 HOURS ☐ 48 HOURS ☐ 1 WEEK ☒ Normal Others:

LABORATORY: McCampbell Analytical

Date: 2/25/16

Report To: Randall Young, Ryder Musselman eMail: ryoung@aewengineering.com

Company: AEW Engineering, Inc. eMail: rmusselman@aewengineering.com

Project Name: Sausalito Gate 5 Characterization Location: Sausalito

Sampler: Randall Young, Ryder Musselman Project No.: 2015-29

Sampler: Signature: Bill To: Kenneth Leung

Reporting Requirement: Hard Copy : Yes ☑ No ☐

PDF File: Yes ☑ No ☐ EXCEL Yes ☑ No ☐

SAMPLE ID	LOCATION	Sampling Date	Sampling Time	# of Containers	Type of Container	Matrix: Water	Soil	Air	Sludge	Other	Method Preserved: Ice	HCl	HNO_3	Other	TPH - Gas, BTEX,& MTBE (EPA 8015 Mod)	TPH-Diesel and Motor Oil w/Silica Gel (EPA 8015 Mod)	VOCs (EPA 8260)	SVOCs (EPA 8270) WITH FLORISIL CLEANUP *	Pesticides (8081/8082) WITH FLORISIL CLEANUP*	PCBs (8081/8082) WITH FLORISIL CLEANUP*	Title 22 Metals (EPA 6000/7000)	Comments
AEW-B10 2.5'	GATE 5 RD	2/25/16	7:51	1	LINER		X				X				X	X	X	X		X	X	AEW COMP B10, B13 2.5-5'
AEW-B10 5'		2/25/16	8:02	1			X				X				X	X	X	X		X	X	
AEW-B13 2.5'		2/23/16	9:06	1			X				X				X	X	X	X		X	X	
AEW-B13 5'		2/23/16	9:34	1			X				X				X	X	X	X		X	X	
AEW-B10 10'		2/25/16	8:11	1			X				X				X	X	X	X		X	X	AEW COMP B10, B13 10-15'
AEW-B10 15'		2/25/16	8:18	1			X				X				X	X	X	X		X	X	
AEW-B13 10'		2/23/16	9:40	1			X				X				X	X	X	X		X	X	
AEW-B13 15'		2/23/16	9:45	1			X				X				X	X	X	X		X	X	

Relinquished By:	Date:	Time:	Received By:
	2/25/16	11:55	
	2-25-16	1520	

*Need to achieve ESLs. Please run all applicable clean-ups to achieve ESLs. Please do not dilute samples. Please contact Randall Young @ (415) 495-8401 if you have any questions. Please hold all samples for 6 months for further analysis.

AEW ENGINEERING, INC.

55 New Montgomery Street, Suite 722, San Francisco, CA 94105
Telephone: (415) 495-8422 Fax: (415) 358-5598

CHAIN OF CUSTODY RECORD

TURN AROUND TIME: ☐ 24 HOURS ☐ 48 HOURS ☐ 1 WEEK ☒ Normal Others:

LABORATORY: McCampbell Analytical

Date: 2/25/16

Report To: Randall Young, Ryder Musselman eMail: ryoung@aewengineering.com
Company: AEW Engineering, Inc. eMail: rmusselman@aewengineering.com
Project Name: Sausalito Gate 5 Characterization Location: Sausalito
Sampler: Randall Young, Ryder Musselman Project No.: 2015-29
Sampler: Signature: Bill To: Kenneth Leung
Reporting Requirement: Hard Copy : Yes ☑ No ☐
PDF File: Yes ☑ No ☐ EXCEL Yes ☑ No ☐

SAMPLE ID	LOCATION	Sampling Date	Sampling Time	# of Containers	Type of Container	Matrix: Water	Soil	Air	Sludge	Other	Method Preserved: Ice	HCl	HNO_3	Other	TPH - Gas, BTEX,& MTBE (EPA 8015 Mod)	TPH-Diesel and Motor Oil w/Silica Gel (EPA 8015 Mod)	VOCs (EPA 8260)	SVOCs (EPA 8270) WITH FLORISIL CLEANUP *	Pesticides (8081/8082) WITH FLORISIL CLEANUP*	PCBs (8081/8082) WITH FLORISIL CLEANUP*	Title 22 Metals (EPA 6000/7000)	Other	Comments
AEW-B12 2.5'	GATE 5 RD	2/24/16	14:41	1	LUMER		X				X				X	X	X	X		X	X		AEW COMP B12, B14 2.5-5'
AEW-B12 5'	↓	↓	14:48	1	↓		X				X				X	X	X	X		X	X		
AEW-B14 2.5'	↓	2/25/16	10:00	1	↓		X				X				X	X	X	X		X	X		
AEW-B14 5'	↓	↓	10:09	1	↓		X				X				X	X	X	X		X	X		
AEW-B12 10'	↓	2/24/16	14:57	1	↓		X				X				X	X	X	X		X	X		AEW COMP B12, B14 10-15'
AEW-B12 15'	↓	↓	15:08	1	↓		X				X				X	X	X	X		X	X		
AEW-B14 10'	↓	2/25/16	10:22	1	↓		X				X				X	X	X	X		X	X		
AEW-B14 15'	↓	↓	10:30	1	↓		X				X				X	X	X	X		X	X		

Relinquished By:	Date:	Time:	Received By:
[signature]	2/25/16	11:55	[signature]
[signature]	2-25-16	15:20	[signature]

*Need to achieve ESLs. Please run all applicable clean-ups to achieve ESLs. Please do not dilute samples. Please contact Randall Young @ (415) 495-8401 if you have any questions. Please hold all samples for 6 months for further analysis.

McCampbell Analytical, Inc.
"When Quality Counts"

1534 Willow Pass Road, Pittsburg, CA 94565-1701
Toll Free Telephone: (877) 252-9262 / Fax: (925) 252-9269
http://www.mccampbell.com / E-mail: main@mccampbell.com

Sample Receipt Checklist

Client Name:	**AEW Engineering, Inc.**	Date and Time Received:	**2/25/2016 15:20**
Project Name:	**2015-29; Sausalito Gate 5 Characterization**	Date Logged:	**2/25/2016**
WorkOrder №:	**1602A52** Matrix: Soil	Received by:	Maria Venegas
Carrier:	Client Drop-In	Logged by:	Maria Venegas

Chain of Custody (COC) Information

Chain of custody present?	Yes ☑	No ☐
Chain of custody signed when relinquished and received?	Yes ☑	No ☐
Chain of custody agrees with sample labels?	Yes ☑	No ☐
Sample IDs noted by Client on COC?	Yes ☑	No ☐
Date and Time of collection noted by Client on COC?	Yes ☑	No ☐
Sampler's name noted on COC?	Yes ☑	No ☐

Sample Receipt Information

Custody seals intact on shipping container/cooler?	Yes ☐	No ☐	NA ☑
Shipping container/cooler in good condition?	Yes ☑	No ☐	
Samples in proper containers/bottles?	Yes ☑	No ☐	
Sample containers intact?	Yes ☑	No ☐	
Sufficient sample volume for indicated test?	Yes ☑	No ☐	

Sample Preservation and Hold Time (HT) Information

All samples received within holding time?	Yes ☑	No ☐	
Sample/Temp Blank temperature	Temp: 3.9°C		NA ☐
Water - VOA vials have zero headspace / no bubbles?	Yes ☐	No ☐	NA ☑
Sample labels checked for correct preservation?	Yes ☑	No ☐	
pH acceptable upon receipt (Metal: <2; 522: <4; 218.7: >8)?	Yes ☐	No ☐	NA ☑
Samples Received on Ice?	Yes ☑	No ☐	
	(Ice Type: WET ICE)		

UCMR3 Samples:

Total Chlorine tested and acceptable upon receipt for EPA 522?	Yes ☐	No ☐	NA ☑
Free Chlorine tested and acceptable upon receipt for EPA 218.7, 300.1, 537, 539?	Yes ☐	No ☐	NA ☑

** NOTE: If the "No" box is checked, see comments below.*

Comments:

McCampbell Analytical, Inc.

"When Quality Counts"

Analytical Report

WorkOrder: 1602A52 A

Report Created for: AEW Engineering, Inc.

55 New Montgomery St, Ste 722
San Francisco, CA 94105

Project Contact: Randy Young
Project P.O.:
Project Name: 2015-29; Sausalito Gate 5 Characterization

Project Received: 02/25/2016

Analytical Report reviewed & approved for release on 03/08/2016 by:

Angela Rydelius,
Laboratory Manager

The report shall not be reproduced except in full, without the written approval of the laboratory. The analytical results relate only to the items tested. Results reported conform to the most current NELAP standards, where applicable, unless otherwise stated in the case narrative.

McCampbell Analytical, Inc.
"When Quality Counts"

1534 Willow Pass Road, Pittsburg, CA 94565-1701
Toll Free Telephone: (877) 252-9262 / Fax: (925) 252-9269
http://www.mccampbell.com / E-mail: main@mccampbell.com

Glossary of Terms & Qualifier Definitions

Client: AEW Engineering, Inc.
Project: 2015-29; Sausalito Gate 5 Characterization
WorkOrder: 1602A52

Glossary Abbreviation

95% Interval	95% Confident Interval
DF	Dilution Factor
DI WET	(DISTLC) Waste Extraction Test using DI water
DISS	Dissolved (direct analysis of 0.45 µm filtered and acidified water sample)
DLT	Dilution Test
DUP	Duplicate
EDL	Estimated Detection Limit
ITEF	International Toxicity Equivalence Factor
LCS	Laboratory Control Sample
MB	Method Blank
MB % Rec	% Recovery of Surrogate in Method Blank, if applicable
MDL	Method Detection Limit
ML	Minimum Level of Quantitation
MS	Matrix Spike
MSD	Matrix Spike Duplicate
N/A	Not Applicable
ND	Not detected at or above the indicated MDL or RL
NR	Data Not Reported due to matrix interference or insufficient sample amount.
PDS	Post Digestion Spike
PDSD	Post Digestion Spike Duplicate
PF	Prep Factor
RD	Relative Difference
RL	Reporting Limit (The RL is the lowest calibration standard in a multipoint calibration.)
RPD	Relative Percent Deviation
RRT	Relative Retention Time
SPK Val	Spike Value
SPKRef Val	Spike Reference Value
SPLP	Synthetic Precipitation Leachate Procedure
ST	Sorbent Tube
TCLP	Toxicity Characteristic Leachate Procedure
TEQ	Toxicity Equivalents
WET (STLC)	Waste Extraction Test (Soluble Threshold Limit Concentration)

McCampbell Analytical, Inc.
"When Quality Counts"

1534 Willow Pass Road, Pittsburg, CA 94565-1701
Toll Free Telephone: (877) 252-9262 / Fax: (925) 252-9269
http://www.mccampbell.com / E-mail: main@mccampbell.com

Glossary of Terms & Qualifier Definitions

Client: AEW Engineering, Inc.
Project: 2015-29; Sausalito Gate 5 Characterization
WorkOrder: 1602A52

Analytical Qualifiers

J	Result is less than the RL/ML but greater than the MDL. The reported concentration is an estimated value.
S	Surrogate spike recovery outside accepted recovery limits
a3	sample diluted due to high organic content.
c2	surrogate recovery outside of the control limits due to matrix interference.
d7	strongly aged gasoline or diesel range compounds are significant in the TPH(g) chromatogram
d9	no recognizable pattern
e2	diesel range compounds are significant; no recognizable pattern
e6	one to a few isolated peaks present in the TPH(d/mo) chromatogram
e7	oil range compounds are significant
e8	kerosene/kerosene range/jet fuel range
h4	sulfuric acid permanganate (EPA 3665) cleanup

Quality Control Qualifiers

F8	MS/MSD recovery and/or RPD was out of acceptance criteria; PDS validated the prep batch. If PDS recovery was out of acceptance criteria, DLT validated the prep batch.
F9	MS/MSD recovery and/or RPD was out of acceptance criteria; DLT validated the prep batch.

McCampbell Analytical, Inc.
"When Quality Counts"

1534 Willow Pass Road, Pittsburg, CA 94565-1701
Toll Free Telephone: (877) 252-9262 / Fax: (925) 252-9269
http://www.mccampbell.com / E-mail: main@mccampbell.com

Analytical Report

Client:	AEW Engineering, Inc.	**WorkOrder:**	1602A52
Date Received:	2/25/16 16:16	**Extraction Method:**	CA Title 22
Date Prepared:	3/5/16	**Analytical Method:**	SW6020
Project:	2015-29; Sausalito Gate 5 Characterization	**Unit:**	mg/L

STLC Metals

Client ID	Lab ID	Matrix	Date Collected	Instrument	Batch ID
COMP AEW-B1,B2 2.5-5'	1602A52-001A	Soil	02/24/2016	ICP-MS1	117625

Analytes	Result	RL	DF	Date Analyzed
Chromium	**0.12**	0.10	1	03/07/2016 17:39

Analyst(s): AC

Client ID	Lab ID	Matrix	Date Collected	Instrument	Batch ID
COMP AEW-B1,B2 10-15'	1602A52-002A	Soil	02/24/2016	ICP-MS1	117625

Analytes	Result	RL	DF	Date Analyzed
Chromium	**0.20**	0.10	1	03/07/2016 17:45

Analyst(s): AC

Client ID	Lab ID	Matrix	Date Collected	Instrument	Batch ID
COMP AEW-B5,B11 2.5-5'	1602A52-005A	Soil	02/25/2016	ICP-MS1	117625

Analytes	Result	RL	DF	Date Analyzed
Chromium	**0.11**	0.10	1	03/07/2016 17:51

Analyst(s): AC

Client ID	Lab ID	Matrix	Date Collected	Instrument	Batch ID
COMP AEW-B5,B11 10-15'	1602A52-006A	Soil	02/25/2016	ICP-MS1	117625

Analytes	Result	RL	DF	Date Analyzed
Chromium	**0.32**	0.10	1	03/07/2016 17:58

Analyst(s): AC

(Cont.)

McCampbell Analytical, Inc.
"When Quality Counts"

1534 Willow Pass Road, Pittsburg, CA 94565-1701
Toll Free Telephone: (877) 252-9262 / Fax: (925) 252-9269
http://www.mccampbell.com / E-mail: main@mccampbell.com

Analytical Report

Client:	AEW Engineering, Inc.	**WorkOrder:**	1602A52
Date Received:	2/25/16 16:16	**Extraction Method:**	CA Title 22
Date Prepared:	3/5/16	**Analytical Method:**	SW6020
Project:	2015-29; Sausalito Gate 5 Characterization	**Unit:**	mg/L

STLC Metals

Client ID	Lab ID	Matrix	Date Collected	Instrument	Batch ID
COMP AEW-B6,B7 2.5-5'	**1602A52-007A**	**Soil**	**02/24/2016**	**ICP-MS1**	**117625**

Analytes	Result	RL	DF	Date Analyzed
Chromium	**0.11**	0.10	1	03/07/2016 18:04

Analyst(s): AC

Client ID	Lab ID	Matrix	Date Collected	Instrument	Batch ID
COMP AEW-B6,B7 10-15'	**1602A52-008A**	**Soil**	**02/24/2016**	**ICP-MS1**	**117625**

Analytes	Result	RL	DF	Date Analyzed
Chromium	**0.18**	0.10	1	03/07/2016 18:22

Analyst(s): AC

Client ID	Lab ID	Matrix	Date Collected	Instrument	Batch ID
COMP AEW-B10,B13 2.5-5'	**1602A52-011A**	**Soil**	**02/25/2016**	**ICP-MS1**	**117625**

Analytes	Result	RL	DF	Date Analyzed
Chromium	ND	0.10	1	03/07/2016 18:34

Analyst(s): AC

Client ID	Lab ID	Matrix	Date Collected	Instrument	Batch ID
COMP AEW-B10,B13 10-15'	**1602A52-012A**	**Soil**	**02/25/2016**	**ICP-MS1**	**117625**

Analytes	Result	RL	DF	Date Analyzed
Chromium	**0.16**	0.10	1	03/07/2016 18:40

Analyst(s): AC

(Cont.)

McCampbell Analytical, Inc.
"When Quality Counts"

1534 Willow Pass Road, Pittsburg, CA 94565-1701
Toll Free Telephone: (877) 252-9262 / Fax: (925) 252-9269
http://www.mccampbell.com / E-mail: main@mccampbell.com

Analytical Report

Client:	AEW Engineering, Inc.	**WorkOrder:**	1602A52
Date Received:	2/25/16 16:16	**Extraction Method:**	CA Title 22
Date Prepared:	3/5/16	**Analytical Method:**	SW6020
Project:	2015-29; Sausalito Gate 5 Characterization	**Unit:**	mg/L

STLC Metals

Client ID	Lab ID	Matrix	Date Collected	Instrument	Batch ID
COMP AEW-B12,B14 10-15'	**1602A52-014A**	**Soil**	**02/25/2016**	**ICP-MS1**	**117625**

Analytes	Result	RL	DF	Date Analyzed
Chromium	ND	0.10	1	03/07/2016 18:46

Analyst(s): AC

McCampbell Analytical, Inc.
"When Quality Counts"

1534 Willow Pass Road, Pittsburg, CA 94565-1701
Toll Free Telephone: (877) 252-9262 / Fax: (925) 252-9269
http://www.mccampbell.com / E-mail: main@mccampbell.com

Analytical Report

Client:	AEW Engineering, Inc.	**WorkOrder:**	1602A52
Date Received:	2/25/16 16:16	**Extraction Method:**	SW1311/SW3050B
Date Prepared:	3/3/16	**Analytical Method:**	SW6020
Project:	2015-29; Sausalito Gate 5 Characterization	**Unit:**	mg/L

TCLP Metals

Client ID	Lab ID	Matrix	Date Collected	Instrument	Batch ID
COMP AEW-B6,B7 10-15'	**1602A52-008A**	**Soil**	**02/24/2016**	**ICP-MS2**	**117545**

Analytes	Result	RL	DF	Date Analyzed
Chromium	ND	0.10	1	03/07/2016 17:50

Analyst(s): DVH

Client ID	Lab ID	Matrix	Date Collected	Instrument	Batch ID
COMP AEW-B8,B9 10-15'	**1602A52-010A**	**Soil**	**02/24/2016**	**ICP-MS2**	**117545**

Analytes	Result	RL	DF	Date Analyzed
Chromium	ND	0.10	1	03/07/2016 18:15

Analyst(s): DVH

Client ID	Lab ID	Matrix	Date Collected	Instrument	Batch ID
COMP AEW-B10,B13 10-15'	**1602A52-012A**	**Soil**	**02/25/2016**	**ICP-MS2**	**117545**

Analytes	Result	RL	DF	Date Analyzed
Chromium	ND	0.10	1	03/07/2016 18:21

Analyst(s): DVH

McCampbell Analytical, Inc.
"When Quality Counts"

1534 Willow Pass Road, Pittsburg, CA 94565-1701
Toll Free Telephone: (877) 252-9262 / Fax: (925) 252-9269
http://www.mccampbell.com / E-mail: main@mccampbell.com

Analytical Report

Client:	AEW Engineering, Inc.	**WorkOrder:**	1602A52
Date Received:	2/25/16 16:16	**Extraction Method:**	CA Title 22
Date Prepared:	3/5/16	**Analytical Method:**	SW6020
Project:	2015-29; Sausalito Gate 5 Characterization	**Unit:**	mg/L

STLC Metals

Client ID	Lab ID	Matrix	Date Collected	Instrument	Batch ID
COMP AEW-B8,B9 10-15'	**1602A52-010A**	**Soil**	**02/24/2016**	**ICP-MS1**	**117625**

Analytes	Result	RL	DF	Date Analyzed
Chromium	**0.15**	0.10	1	03/07/2016 18:28
Nickel	**0.45**	0.10	1	03/07/2016 18:28

Analyst(s): AC

McCampbell Analytical, Inc.
"When Quality Counts"

1534 Willow Pass Road, Pittsburg, CA 94565-1701
Toll Free Telephone: (877) 252-9262 / Fax: (925) 252-9269
http://www.mccampbell.com / E-mail: main@mccampbell.com

Quality Control Report

Client:	AEW Engineering, Inc.	**WorkOrder:**	1602A52
Date Prepared:	3/5/16	**BatchID:**	117625
Date Analyzed:	3/7/16	**Extraction Method:**	CA Title 22
Instrument:	ICP-MS1	**Analytical Method:**	SW6020
Matrix:	Soil	**Unit:**	mg/L
Project:	2015-29; Sausalito Gate 5 Characterization	**Sample ID:**	MB/LCS-117625 1602833-022BMS/MSD

QC Summary Report for Metals (STLC)

Analyte	MB Result	LCS Result	RL	SPK Val	MB SS %REC	LCS %REC	LCS Limits
Chromium	ND	10.4	0.10	10	-	103	75-125
Nickel	ND	10.2	0.10	10	-	102	75-125

Analyte	MS Result	MSD Result	SPK Val	SPKRef Val	MS %REC	MSD %REC	MS/MSD Limits	RPD	RPD Limit
Chromium	10.5	10.5	10	ND	105	105	75-125	0	20
Nickel	11.3	11.4	10	1.0	103	104	75-125	1.44	20

McCampbell Analytical, Inc.
"When Quality Counts"

1534 Willow Pass Road, Pittsburg, CA 94565-1701
Toll Free Telephone: (877) 252-9262 / Fax: (925) 252-9269
http://www.mccampbell.com / E-mail: main@mccampbell.com

Quality Control Report

Client:	AEW Engineering, Inc.	**WorkOrder:**	1602A52
Date Prepared:	3/3/16	**BatchID:**	117545
Date Analyzed:	3/7/16	**Extraction Method:**	SW1311/SW3050B
Instrument:	ICP-MS2	**Analytical Method:**	SW6020
Matrix:	Soil	**Unit:**	mg/L
Project:	2015-29; Sausalito Gate 5 Characterization	**Sample ID:**	MB/LCS-117545 1602A52-008AMS/MSD

QC Summary Report for Metals (TCLP)

Analyte	MB Result	LCS Result	RL	SPK Val	MB SS %REC	LCS %REC	LCS Limits
Chromium	ND	11.5	0.10	10	-	115	75-125

Analyte	MS Result	MSD Result	SPK Val	SPKRef Val	MS %REC	MSD %REC	MS/MSD Limits	RPD	RPD Limit
Chromium	10.7	10.8	10	ND	107	107	75-125	0	20

McCampbell Analytical, Inc.
1534 Willow Pass Rd
Pittsburg, CA 94565-1701
(925) 252-9262

CHAIN-OF-CUSTODY RECORD

WorkOrder: 1602A52 A **ClientCode: AEW**

☐ WaterTrax ☐ WriteOn ☐ EDF ☑ Excel ☐ Fax ☑ Email ☑ HardCopy ☐ ThirdParty ☐ J-flag

Report to:
Randy Young
AEW Engineering, Inc.
55 New Montgomery St, Ste 722
San Francisco, CA 94105
(415) 495-8401 FAX: (415) 358-5598

Email: ryoung@aewengineering.com
cc/3rd Party: rmusselman@aewengineering.com;
PO:
ProjectNo: 2015-29; Sausalito Gate 5 Characterization

Bill to:
Kenneth Leung
AEW Engineering, Inc.
55 New Montgomery St, Ste 507
San Francisco, CA 94105
kleung@aewengineering.com; byeung

Requested TAT: 5 days;

Date Received: 02/25/2016
Date Logged: 02/25/2016
Date Add-On: 03/03/2016

Lab ID	Client ID	Matrix	Collection Date	Hold	Requested Tests (See legend below) 1	2	3	4	5	6	7	8	9	10	11	12
1602A52-001	COMP AEW-B1,B2 2.5-5'	Soil	2/24/2016	☐	A											
1602A52-002	COMP AEW-B1,B2 10-15'	Soil	2/24/2016	☐	A											
1602A52-005	COMP AEW-B5,B11 2.5-5'	Soil	2/25/2016	☐	A											
1602A52-006	COMP AEW-B5,B11 10-15'	Soil	2/25/2016	☐	A											
1602A52-007	COMP AEW-B6,B7 2.5-5'	Soil	2/24/2016	☐	A											
1602A52-008	COMP AEW-B6,B7 10-15'	Soil	2/24/2016	☐	A	A										
1602A52-010	COMP AEW-B8,B9 10-15'	Soil	2/24/2016	☐		A	A									
1602A52-011	COMP AEW-B10,B13 2.5-5'	Soil	2/25/2016	☐	A											
1602A52-012	COMP AEW-B10,B13 10-15'	Soil	2/25/2016	☐	A	A										
1602A52-014	COMP AEW-B12,B14 10-15'	Soil	2/25/2016	☐	A											

Test Legend:

1	CRMS_STLC_S	2	CRMS_TCLP_S	3	METALSMS_STLC_S	4	
5		6		7		8	
9		10		11		12	

Prepared by: Maria Venegas

Add-On Prepared By: Maria Venegas

Comments: Hold all soil samples for 6mos per Ken Leung 3/14/14. STLC's & TCLP's added 3/3/16 STAT.

NOTE: Soil samples are discarded 60 days after results are reported unless other arrangements are made (Water samples are 30 days).
Hazardous samples will be returned to client or disposed of at client expense.

McCampbell Analytical, Inc.
"When Quality Counts"

1534 Willow Pass Road, Pittsburg, CA 94565-1701
Toll Free Telephone: (877) 252-9262 / Fax: (925) 252-9269
http://www.mccampbell.com / E-mail: main@mccampbell.com

WORK ORDER SUMMARY

Client Name: AEW ENGINEERING, INC.
Project: 2015-29; Sausalito Gate 5 Characterization
Comments: Hold all soil samples for 6mos per Ken Leung 3/14/14. STLC's & TCLP's added 3/3/16 STAT.

QC Level: LEVEL 2
Client Contact: Randy Young
Contact's Email: ryoung@aewengineering.com

Work Order: 1602A52
Date Logged: 2/25/2016
Date Add-On: 3/3/2016

Lab ID	Client ID	Matrix	Test Name	Containers /Composites	Bottle & Preservative	Collection Date & Time	TAT	Sediment Content	Hold	SubOut
1602A52-001A	COMP AEW-B1,B2 2.5-5'	Soil	SW6020 (Chromium) (STLC)	4 / (4:1)	Acetate Liner	2/24/2016	5 days*		☐	
1602A52-002A	COMP AEW-B1,B2 10-15'	Soil	SW6020 (Chromium) (STLC)	4 / (4:1)	Acetate Liner	2/24/2016	5 days*		☐	
1602A52-005A	COMP AEW-B5,B11 2.5-5'	Soil	SW6020 (Chromium) (STLC)	4 / (4:1)	Acetate Liner	2/25/2016	5 days*		☐	
1602A52-006A	COMP AEW-B5,B11 10-15'	Soil	SW6020 (Chromium) (STLC)	4 / (4:1)	Acetate Liner	2/25/2016	5 days*		☐	
1602A52-007A	COMP AEW-B6,B7 2.5-5'	Soil	SW6020 (Chromium) (STLC)	4 / (4:1)	Acetate Liner	2/24/2016	5 days*		☐	
1602A52-008A	COMP AEW-B6,B7 10-15'	Soil	SW6020 (Chromium) (TCLP)	4 / (4:1)	Acetate Liner	2/24/2016	5 days*		☐	
			SW6020 (Chromium) (STLC)				5 days*		☐	
1602A52-010A	COMP AEW-B8,B9 10-15'	Soil	SW6020 (Metals) (STLC) <Chromium, Nickel>	4 / (4:1)	Acetate Liner	2/24/2016	5 days*		☐	
			SW6020 (Chromium) (TCLP)				5 days*		☐	
1602A52-011A	COMP AEW-B10,B13 2.5-5'	Soil	SW6020 (Chromium) (STLC)	4 / (4:1)	Acetate Liner	2/25/2016	5 days*		☐	
1602A52-012A	COMP AEW-B10,B13 10-15'	Soil	SW6020 (Chromium) (TCLP)	4 / (4:1)	Acetate Liner	2/25/2016	5 days*		☐	
			SW6020 (Chromium) (STLC)				5 days*		☐	
1602A52-014A	COMP AEW-B12,B14 10-15'	Soil	SW6020 (Chromium) (STLC)	4 / (4:1)	Acetate Liner	2/25/2016	5 days*		☐	

NOTES: - STLC and TCLP extractions require 2 days to complete; therefore, all TATs begin after the extraction is completed (i.e., One-day TAT yields results in 3 days from sample submission).

- MAI assumes that all material present in the provided sampling container is considered part of the sample - MAI does not exclude any material from the sample prior to sample preparation unless requested in writing by the client.

1602A52

AEW ENGINEERING, INC.

55 New Montgomery Street, Suite 722, San Francisco, CA 94105

Telephone: (415) 495-8422 Fax: (415) 358-5598

CHAIN OF CUSTODY RECORD

TURN AROUND TIME: ☐ 24 HOURS ☐ 48 HOURS ☐ 1 WEEK ☒ Normal Others:

LABORATORY: McCampbell Analytical

Date: 2/25/16

Report To: Randall Young, Ryder Musselman **eMail:** ryoung@aewengineering.com

Company: AEW Engineering, Inc. **eMail:** rmusselman@aewengineering.com

Project Name: Sausalito Gate 5 Characterization **Location:** Sausalito

Sampler: Randall Young, Ryder Musselman **Project No.:** 2015-29

Sampler: Signature: **Bill To:** Kenneth Leung

Reporting Requirement: Hard Copy : Yes ☑ No ☐

PDF File: Yes ☑ No ☐ EXCEL Yes ☑ No ☐

SAMPLE ID	LOCATION	Sampling Date	Sampling Time	# of Containers	Type of Container	Matrix: Water	Matrix: Soil	Matrix: Air	Matrix: Sludge	Matrix: Other	Method Perserved: Ice	Method Perserved: HCl	Method Perserved: HNO_3	Method Perserved: Other	TPH - Gas, BTEX,& MTBE (EPA 8015 Mod)	TPH-Diesel and Motor Oil w/Silica Gel (EPA 8015 Mod)	VOCs (EPA 8260)	SVOCs (EPA 8270) WITH FLORISIL CLEANUP*	Pesticides (8081/8082) WITH FLORISIL CLEANUP*	PCBs (8081/8082) WITH FLORISIL CLEANUP*	Title 22 Metals (EPA 6000/7000)	STLC Cr 3/3/16 STAT	Other	Comments
AEW-B1 2.5'	GATE 5 RD.	2/24/16	12:30	1	LINER		X				X				X	X	X	X	X	X	X	X		
AEW-B1 5'	↓	↓	12:34	1	↓		X				X				X	X	X	X	X	X	X	X		comp AEW-B1, B2 2.5-5'
AEW-B2 2.5'	↓	↓	10:35	1	↓		X				X				X	X	X	X	X	X	X	X		
AEW-B2 5'	↓	↓	10:40	1	↓		X				X				X	X	X	X	X	X	X	X		
AEW-B1 10'	↓	↓	12:45	1	↓		X				X				X	X	X	X	X	X	X	X		comp AEW-B1, B2 10-15'
AEW-B1 15'	↓	↓	13:02	1	↓		X				X				X	X	X	X	X	X	X	X		
AEW-B2 10'	↓	↓	10:50	1	↓		X				X				X	X	X	X	X	X	X	X		
AEW-B2 15'	↓	↓	11:00	1	↓		X				X				X	X	X	X	X	X	X	X		

ICE/t° 3.9
GOOD CONDITION
HEAD SPACE ABSENT
DECHLORINATED IN LAB
APPROPRIATE CONTAINERS
PRESERVED IN LAB
PRESERVATION VOAS | O&G | METALS | OTHER

Relinquished By:	Date:	Time:	Received By:
	2/25/16	11:55	
	2-25-16	1720	

*Need to achieve ESLs. Please run all applicable clean-ups to achieve ESLs. Please do not dilute samples. Please contact Randall Young @ (415) 495-8401 if you have any questions. Please hold all samples for 6 months for further analysis.

AEW ENGINEERING, INC.
55 New Montgomery Street, Suite 722, San Francisco, CA 94105
Telephone: (415) 495-8422 Fax: (415) 358-5598

CHAIN OF CUSTODY RECORD

TURN AROUND TIM ☐ 24 HOURS ☐ 48 HOURS ☐ 1 WEEK ☒ Normal Others:

LABORATORY: McCampbell Analytica

Date: 2/25/16

Report To: Randall Young, Ryder Musselman **eMail:** ryoung@aewengineering.com
Company: AEW Engineering, Inc. **eMail:** rmusselman@aewengineering.co
Project Name: Sausalito Gate 5 Characterization **Location:** Sausalito
Sampler: Randall Young, Ryder Musselman **Project No.:** 2015-29
Sampler: Signature: **Bill To:** Kenneth Leung
Reporting Requirement: Hard Copy : Yes ☑ No ☐
PDF File: Yes ☑ No ☐ EXCEL Yes ☑ No ☐

SAMPLE ID	LOCATION	Sampling Date	Sampling Time	# of Containers	Type of Container	Matrix: Water	Matrix: Soil	Matrix: Air	Matrix: Sludge	Matrix: Other	Method Perserved: Ice	Method Perserved: HCl	Method Perserved: HNO_3	Method Perserved: Other	TPH - Gas, BTEX,& MTBE (EPA 8015 Mod)	TPH-Diesel and Motor Oil w/Silica Gel (EPA 8015 Mod)	VOCs (EPA 8260)	SVOCs (EPA 8270) WITH FLORISIL CLEANUP *	~~Pesticides (8081/8082) WITH FLORISIL CLEANUP*~~	PCBs (8081/8082) WITH FLORISIL CLEANUP*	Title 22 Metals (EPA 6000/7000)	STLC Cr 3/3/16 STAT	Other	Comments
AEW-BS 2.5'	GATE 5 RD	2/23/16	12:55	1	LINER		X				X				X	X	X	X		X	X			AEW COMP BS, B11 2.5-5'
AEW-BS 5'	↓	↓	13:15	1	↓		X				X				X	X	X	X		X	X			
AEW-B11 2.5'	↓	2/25/16	8:46	1	↓		X				X				X	X	X	X		X	X			
AEW-B11 5'	↓	↓	8:54	1	↓		X				X				X	X	X	X		X	X			
AEW-BS 10'	↓	2/23/16	13:20	1	↓		X				X				X	X	X	X		X	X			AEW COMP BS, B11 10-15'
AEW-BS 15'	↓	↓	13:25	1	↓		X				X				X	X	X	X		X	X			
AEW-B11 10'	↓	2/25/16	9:06	1	↓		X				X				X	X	X	X		X	X			
AEW-B11 15'	↓	↓	9:11	1	↓		X				X				X	X	X	X		X	X			

Relinquished By:	Date:	Time:	Received By:
	2/25/16	11:55	
	2-25-16	1520	

*Need to achieve ESLs. Please run all applicable clean-ups to achieve ESLs. Please do not dilute samples. Please contact Randall Young @ (415) 495-8401 if you have any questions. Please hold all samples for 6 months for further analysis.

AEW ENGINEERING, INC.

55 New Montgomery Street, Suite 722, San Francisco, CA 94105

Telephone: (415) 495-8422 Fax: (415) 358-5598

CHAIN OF CUSTODY RECORD

TURN AROUND TIME: ☐ 24 HOURS ☐ 48 HOURS ☐ 1 WEEK ☒ Normal Others:

LABORATORY: McCampbell Analytical

Date: 2/25/16

Report To: Randall Young, Ryder Musselman eMail: ryoung@aewengineering.com

Company: AEW Engineering, Inc. eMail: rmusselman@aewengineering.com

Project Name: Sausalito Gate 5 Characterization Location: Sausalito

Sampler: Randall Young, Ryder Musselman Project No.: 2015-29

Sampler: Signature: Bill To: Kenneth Leung

Reporting Requirement: Hard Copy : Yes ☑ No ☐

PDF File: Yes ☑ No ☐ EXCEL Yes ☑ No ☐

SAMPLE ID	LOCATION	Sampling Date	Sampling Time	# of Containers	Type of Container	Matrix: Water	Soil	Air	Sludge	Other	Method Perserved: Ice	HCl	HNO_3	Other	TPH - Gas, BTEX,& MTBE (EPA 8015 Mod)	TPH-Diesel and Motor Oil w/Silica Gel (EPA 8015 Mod)	VOCs (EPA 8260)	SVOCs (EPA 8270) WITH FLORISIL CLEANUP *	~~Pesticides (8081/8082) WITH FLORISIL CLEANUP*~~	PCBs (8081/8082) WITH FLORISIL CLEANUP*	Title 22 Metals (EPA 6000/7000)	STLC Cr 3/3/16 STAT	TCLP Cr 1	Other	Comments
AEW-B6 2.5'	GATE 5 RD	2/24/16	9:20	1	UNCR		X				X				X	X	X	X		X	X	X			AEW comp B6, B7 2.5-5'
AEW-B6 5'	↓	↓	9:50	1	↓		X				X				X	X	X	X		X	X	X			
AEW-B7 2.5'			13:30	1			X				X				X	X	X	X		X	X	X			
AEW-B7 5'			13:55	1			X				X				X	X	X	X		X	X	X			
AEW-B6 10'			9:55	1			X				X				X	X	X	X		X	X	X			AEW comp B6, B7 10-15'
AEW-B6 15'			10:00	1			X				X				X	X	X	X		X	X	X			
AEW-B7 10'			14:00	1			X				X				X	X	X	X		X	X	X			
AEW-B7 15'	↓	↓	14:05	1	↓		X				X				X	X	X	X		X	X	X			

Relinquished By:	Date:	Time:	Received By:
	2/25/16	11:55	
	2-25-16	1520	

*Need to achieve ESLs. Please run all applicable clean-ups to achieve ESLs. Please do not dilute samples. Please contact Randall Young @ (415) 495-8401 if you have any questions. Please hold all samples for 6 months for further analysis.

AEW ENGINEERING, INC.
55 New Montgomery Street, Suite 722, San Francisco, CA 94105
Telephone: (415) 495-8422 Fax: (415) 358-5598

CHAIN OF CUSTODY RECORD

TURN AROUND TIME: ☐ 24 HOURS ☐ 48 HOURS ☐ 1 WEEK ☒ Normal Others:

LABORATORY: McCampbell Analytical

Date: 2/25/16

Report To: Randall Young, Ryder Musselman eMail: ryoung@aewengineering.com

Company: AEW Engineering, Inc. eMail: rmusselman@aewengineering.com

Project Name: Sausalito Gate 5 Characterization Location: Sausalito

Sampler: Randall Young, Ryder Musselman Project No.: 2015-29

Sampler: Signature: Bill To: Kenneth Leung

Reporting Requirement: Hard Copy : Yes ☑ No ☐

PDF File: Yes ☑ No ☐ EXCEL Yes ☑ No ☐

SAMPLE ID	LOCATION	Sampling Date	Sampling Time	# of Containers	Type of Container	Matrix: Water	Soil	Air	Sludge	Other	Method Perserved: Ice	HCl	HNO_3	Other	TPH - Gas, BTEX,& MTBE (EPA 8015 Mod)	TPH-Diesel and Motor Oil w/Silica Gel (EPA 8015 Mod)	VOCs (EPA 8260)	SVOCs (EPA 8270) WITH FLORISIL CLEANUP *	Pesticides (8081/8082) WITH FLORISIL CLEANUP*	PCBs (8081/8082) WITH FLORISIL CLEANUP*	Title 22 Metals (EPA 6000/7000)	STLC Cr	STLC Ni & 3/3/16 STAT	TCLP Cr	Other	Comments
AEW-B8 2.5'	GATE 5 RD	2/23/16	10:45	1	LINER		X				X				X	X	X	X		X	X					AEW comp B8, B9 2.5-5'
AEW-B8 5'	↓	↓	11:16	1	↓		X				X				X	X	X	X		X	X					
AEW-B9 2.5'		2/24/16	8:03	1			X				X				X	X	X	X		X	X					
AEW-B9 5'		↓	8:19	1			X				X				X	X	X	X		X	X					
AEW-B8 10'		2/23/16	11:23	1			X				X				X	X	X	X		X	X	X	X	X		AEW comp B8, B9 10-15'
AEW-B8 15'		↓	11:28	1			X				X				X	X	X	X		X	X	X	X	X		
AEW-B9 10'		2/24/16	8:30	1			X				X				X	X	X	X		X	X	X	X	X		
AEW-B9 15'	↓	↓	8:34	1	↓		X				X				X	X	X	X		X	X	X	X	X		

Relinquished By:	Date:	Time:	Received By:
	2/25/15	11:55	
	2-25-16	15:20	

*Need to achieve ESLs. Please run all applicable clean-ups to achieve ESLs. Please do not dilute samples. Please contact Randall Young @ (415) 495-8401 if you have any questions. Please hold all samples for 6 months for further analysis.

AEW ENGINEERING, INC.

55 New Montgomery Street, Suite 722, San Francisco, CA 94105

Telephone: (415) 495-8422 Fax: (415) 358-5598

CHAIN OF CUSTODY RECORD

TURN AROUND TIME: ☐ 24 HOURS ☐ 48 HOURS ☐ 1 WEEK ☒ Normal Others:

LABORATORY: McCampbell Analytica

Date: 2/25/16

Report To: Randall Young, Ryder Musselman **eMail:** ryoung@aewengineering.com

Company: AEW Engineering, Inc. **eMail:** rmusselman@aewengineering.com

Project Name: Sausalito Gate 5 Characterization **Location:** Sausalito

Sampler: Randall Young, Ryder Musselman **Project No.:** 2015-29

Sampler: Signature: **Bill To:** Kenneth Leung

Reporting Requirement: Hard Copy : Yes ☑ No ☐

PDF File: Yes ☑ No ☐ EXCEL Yes ☑ No ☐

SAMPLE ID	LOCATION	Sampling Date	Sampling Time	# of Containers	Type of Container	Matrix: Water	Soil	Air	Sludge	Other	Method Perserved: Ice	HCl	HNO_3	Other	TPH - Gas, BTEX,& MTBE (EPA 8015 Mod)	TPH-Diesel and Motor Oil w/Silica Gel (EPA 8015 Mod)	VOCs (EPA 8260)	SVOCs (EPA 8270) WITH FLORISIL CLEANUP *	Pesticides (8081/8082) WITH FLORISIL CLEANUP*	PCBs (8081/8082) WITH FLORISIL CLEANUP*	Title 22 Metals (EPA 6000/7000)	STLC Cr 3/3/16 STAT	TCLP Cr +	Other	Comments
AEW-B10 2.5'	GATE 5 RD	2/25/16	7:51	1	LINER		X				X				X	X	X	X		X	X	X			AEW COMP B10, B13 2.5-5'
AEW-B10 5'		2/25/16	8:02	1			X				X				X	X	X	X		X	X	X			
AEW-B13 2.5'		2/23/16	9:06	1			X				X				X	X	X	X		X	X	X			
AEW-B13 5'		2/23/16	9:34	1			X				X				X	X	X	X		X	X	X			
AEW-B10 10'		2/25/16	8:11	1			X				X				X	X	X	X		X	X	X			AEW COMP B10, B13 10-15'
AEW-B10 15'		2/25/16	8:18	1			X				X				X	X	X	X		X	X	X			
AEW-B13 10'		2/23/16	9:40	1			X				X				X	X	X	X		X	X	X			
AEW-B13 15'		2/23/16	9:45	1			X				X				X	X	X	X		X	X	X			

Relinquished By:	Date:	Time:	Received By:
	2/25/16	11:55	
	2-25-16	1520	

*Need to achieve ESLs. Please run all applicable clean-ups to achieve ESLs. Please do not dilute samples. Please contact Randall Young @ (415) 495-8401 if you have any questions. Please hold all samples for 6 months for further analysis.

AEW ENGINEERING, INC.
55 New Montgomery Street, Suite 722, San Francisco, CA 94105
Telephone: (415) 495-8422 Fax: (415) 358-5598

CHAIN OF CUSTODY RECORD

TURN AROUND TIME: ☐ 24 HOURS ☐ 48 HOURS ☐ 1 WEEK ☒ Normal Others:

LABORATORY: McCampbell Analytical

Date: 2/25/16

Report To: Randall Young, Ryder Musselman eMail: ryoung@aewengineering.com
Company: AEW Engineering, Inc. eMail: rmusselman@aewengineering.com
Project Name: Sausalito Gate 5 Characterization Location: Sausalito
Sampler: Randall Young, Ryder Musselman Project No.: 2015-29
Sampler: Signature: Bill To: Kenneth Leung
Reporting Requirement: Hard Copy : Yes ☑ No ☐
PDF File: Yes ☑ No ☐ EXCEL Yes ☑ No ☐

SAMPLE ID	LOCATION	Sampling Date	Sampling Time	# of Containers	Type of Container	Matrix: Water	Soil	Air	Sludge	Other	Method Perserved: Ice	HCl	HNO_3	Other	TPH - Gas, BTEX,& MTBE (EPA 8015 Mod)	TPH-Diesel and Motor Oil w/Silica Gel (EPA 8015 Mod)	VOCs (EPA 8260)	SVOCs (EPA 8270) WITH FLORISIL CLEANUP *	Pesticides (8081/8082) WITH FLORISIL CLEANUP*	PCBs (8081/8082) WITH FLORISIL CLEANUP*	Title 22 Metals (EPA 6000/7000)	STLC Cr 3/B/16 STAT	Other	Comments
AEW-B12 2.5'	GATE 5 RD	2/24/16	14:41	1	LINER		X				X				X	X	X	X		X	X			AEW comp B12, B14 2.5-5'
AEW-B12 5'	↓	↓	14:48	1	↓		X				X				X	X	X	X		X	X			
AEW-B14 2.5'		2/25/16	10:00	1			X				X				X	X	X	X		X	X			
AEW-B14 5'		↓	10:09	1			X				X				X	X	X	X		X	X			
AEW-B12 10'		2/24/16	14:57	1			X				X				X	X	X	X		X	X	X		AEW comp B12, B14 10-15'
AEW-B12 15'		↓	15:08	1			X				X				X	X	X	X		X	X	X		
AEW-B14 10'		2/25/16	10:22	1			X				X				X	X	X	X		X	X	X		
AEW-B14 15'	↓	↓	10:30	1	↓		X				X				X	X	X	X		X	X	X		

Relinquished By:	Date:	Time:	Received By:
	2/25/16	11:55	
	2-25-16	15:20	

*Need to achieve ESLs. Please run all applicable clean-ups to achieve ESLs. Please do not dilute samples. Please contact Randall Young @ (415) 495-8401 if you have any questions. Please hold all samples for 6 months for further analysis.

McCampbell Analytical, Inc.

"When Quality Counts"

Analytical Report

WorkOrder: 1602977

Report Created for: AEW Engineering, Inc.

55 New Montgomery St, Ste 722
San Francisco, CA 94105

Project Contact: Ryder Musselman
Project P.O.:
Project Name: 2015-29; Sausalito Gate 5 Characterization

Project Received: 02/24/2016

Analytical Report reviewed & approved for release on 03/01/2016 by:

Angela Rydelius,
Laboratory Manager

The report shall not be reproduced except in full, without the written approval of the laboratory. The analytical results relate only to the items tested. Results reported conform to the most current NELAP standards, where applicable, unless otherwise stated in the case narrative.

McCampbell Analytical, Inc.
"When Quality Counts"

1534 Willow Pass Road, Pittsburg, CA 94565-1701
Toll Free Telephone: (877) 252-9262 / Fax: (925) 252-9269
http://www.mccampbell.com / E-mail: main@mccampbell.com

Glossary of Terms & Qualifier Definitions

Client: AEW Engineering, Inc.
Project: 2015-29; Sausalito Gate 5 Characterization
WorkOrder: 1602977

Glossary Abbreviation

95% Interval	95% Confident Interval
DF	Dilution Factor
DI WET	(DISTLC) Waste Extraction Test using DI water
DISS	Dissolved (direct analysis of 0.45 µm filtered and acidified water sample)
DLT	Dilution Test
DUP	Duplicate
EDL	Estimated Detection Limit
ITEF	International Toxicity Equivalence Factor
LCS	Laboratory Control Sample
MB	Method Blank
MB % Rec	% Recovery of Surrogate in Method Blank, if applicable
MDL	Method Detection Limit
ML	Minimum Level of Quantitation
MS	Matrix Spike
MSD	Matrix Spike Duplicate
N/A	Not Applicable
ND	Not detected at or above the indicated MDL or RL
NR	Data Not Reported due to matrix interference or insufficient sample amount.
PDS	Post Digestion Spike
PDSD	Post Digestion Spike Duplicate
PF	Prep Factor
RD	Relative Difference
RL	Reporting Limit (The RL is the lowest calibration standard in a multipoint calibration.)
RPD	Relative Percent Deviation
RRT	Relative Retention Time
SPK Val	Spike Value
SPKRef Val	Spike Reference Value
SPLP	Synthetic Precipitation Leachate Procedure
ST	Sorbent Tube
TCLP	Toxicity Characteristic Leachate Procedure
TEQ	Toxicity Equivalents
WET (STLC)	Waste Extraction Test (Soluble Threshold Limit Concentration)

McCampbell Analytical, Inc.
"When Quality Counts"

1534 Willow Pass Road, Pittsburg, CA 94565-1701
Toll Free Telephone: (877) 252-9262 / Fax: (925) 252-9269
http://www.mccampbell.com / E-mail: main@mccampbell.com

Glossary of Terms & Qualifier Definitions

Client: AEW Engineering, Inc.
Project: 2015-29; Sausalito Gate 5 Characterization
WorkOrder: 1602977

Analytical Qualifiers

S	Surrogate spike recovery outside accepted recovery limits
F	sample was filtered upon arrival to the lab
a1	sample diluted due to matrix interference
a3	sample diluted due to high organic content.
c2	surrogate recovery outside of the control limits due to matrix interference.
e2	diesel range compounds are significant; no recognizable pattern
e7	oil range compounds are significant

McCampbell Analytical, Inc.
"When Quality Counts"

1534 Willow Pass Road, Pittsburg, CA 94565-1701
Toll Free Telephone: (877) 252-9262 / Fax: (925) 252-9269
http://www.mccampbell.com / E-mail: main@mccampbell.com

Analytical Report

Client:	AEW Engineering, Inc.	**WorkOrder:**	1602977
Date Received:	2/24/16 15:37	**Extraction Method:**	E1664A_SG
Date Prepared:	2/26/16	**Analytical Method:**	E1664A
Project:	2015-29; Sausalito Gate 5 Characterization	**Unit:**	mg/L

Hexane Extractable Material with Silica Gel Clean-Up

Client ID	Lab ID	Matrix	Date Collected	Instrument	Batch ID
AEW-B9 GW	**1602977-001G**	**Water**	**02/24/2016 08:50**	**O&G**	**117179**

Analytes	Result	RL	DF	Date Analyzed
HEMSGT	ND	5.0	1	02/29/2016 15:35

Analyst(s): HN

Client ID	Lab ID	Matrix	Date Collected	Instrument	Batch ID
AEW-B2 GW	**1602977-002G**	**Water**	**02/24/2016 11:10**	**O&G**	**117179**

Analytes	Result	RL	DF	Date Analyzed
HEMSGT	ND	5.0	1	02/29/2016 15:40

Analyst(s): HN

McCampbell Analytical, Inc.
"When Quality Counts"

1534 Willow Pass Road, Pittsburg, CA 94565-1701
Toll Free Telephone: (877) 252-9262 / Fax: (925) 252-9269
http://www.mccampbell.com / E-mail: main@mccampbell.com

Analytical Report

Client:	AEW Engineering, Inc.	**WorkOrder:**	1602977
Date Received:	2/24/16 15:37	**Extraction Method:**	SW3510C
Date Prepared:	2/24/16	**Analytical Method:**	SW8081A/8082
Project:	2015-29; Sausalito Gate 5 Characterization	**Unit:**	µg/L

Organochlorine Pesticides (Basic Target List) + PCBs

Client ID	Lab ID	Matrix	Date Collected	Instrument	Batch ID
AEW-B9 GW	**1602977-001E**	**Water**	**02/24/2016 08:50**	**GC20**	**117175**

Analytes	Result	RL	DF	Date Analyzed
Aldrin	ND	0.0050	1	02/25/2016 01:59
a-BHC	ND	0.010	1	02/25/2016 01:59
b-BHC	ND	0.0050	1	02/25/2016 01:59
d-BHC	ND	0.0050	1	02/25/2016 01:59
g-BHC	ND	0.020	1	02/25/2016 01:59
Chlordane (Technical)	ND	0.10	1	02/25/2016 01:59
a-Chlordane	ND	0.050	1	02/25/2016 01:59
g-Chlordane	ND	0.050	1	02/25/2016 01:59
p,p-DDD	ND	0.010	1	02/25/2016 01:59
p,p-DDE	ND	0.010	1	02/25/2016 01:59
p,p-DDT	ND	0.010	1	02/25/2016 01:59
Dieldrin	ND	0.010	1	02/25/2016 01:59
Endosulfan I	ND	0.020	1	02/25/2016 01:59
Endosulfan II	ND	0.020	1	02/25/2016 01:59
Endosulfan sulfate	ND	0.050	1	02/25/2016 01:59
Endrin	ND	0.010	1	02/25/2016 01:59
Endrin aldehyde	ND	0.050	1	02/25/2016 01:59
Endrin ketone	ND	0.050	1	02/25/2016 01:59
Heptachlor	ND	0.010	1	02/25/2016 01:59
Heptachlor epoxide	ND	0.010	1	02/25/2016 01:59
Hexachlorobenzene	ND	0.50	1	02/25/2016 01:59
Hexachlorocyclopentadiene	ND	1.0	1	02/25/2016 01:59
Methoxychlor	ND	0.10	1	02/25/2016 01:59
Toxaphene	ND	0.50	1	02/25/2016 01:59
Aroclor1016	ND	0.50	1	02/25/2016 01:59
Aroclor1221	ND	0.50	1	02/25/2016 01:59
Aroclor1232	ND	0.50	1	02/25/2016 01:59
Aroclor1242	ND	0.50	1	02/25/2016 01:59
Aroclor1248	ND	0.50	1	02/25/2016 01:59
Aroclor1254	ND	0.50	1	02/25/2016 01:59
Aroclor1260	ND	0.50	1	02/25/2016 01:59
PCBs, total	ND	0.50	1	02/25/2016 01:59

Surrogates	REC (%)	Limits	
Decachlorobiphenyl	107	70-130	02/25/2016 01:59

Analyst(s): CK

(Cont.)

CDPH ELAP 1644 ♦ NELAP 4033ORELAP

Angela Rydelius, Lab Manager

McCampbell Analytical, Inc.
"When Quality Counts"

1534 Willow Pass Road, Pittsburg, CA 94565-1701
Toll Free Telephone: (877) 252-9262 / Fax: (925) 252-9269
http://www.mccampbell.com / E-mail: main@mccampbell.com

Analytical Report

Client:	AEW Engineering, Inc.	**WorkOrder:**	1602977
Date Received:	2/24/16 15:37	**Extraction Method:**	SW3510C
Date Prepared:	2/24/16	**Analytical Method:**	SW8081A/8082
Project:	2015-29; Sausalito Gate 5 Characterization	**Unit:**	µg/L

Organochlorine Pesticides (Basic Target List) + PCBs

Client ID	Lab ID	Matrix	Date Collected	Instrument	Batch ID
AEW-B2 GW	**1602977-002E**	**Water**	**02/24/2016 11:10**	**GC20**	**117175**

Analytes	Result	RL	DF	Date Analyzed
Aldrin	ND	0.050	10	02/25/2016 00:56
a-BHC	ND	0.10	10	02/25/2016 00:56
b-BHC	ND	0.050	10	02/25/2016 00:56
d-BHC	ND	0.050	10	02/25/2016 00:56
g-BHC	ND	0.20	10	02/25/2016 00:56
Chlordane (Technical)	ND	1.0	10	02/25/2016 00:56
a-Chlordane	ND	0.50	10	02/25/2016 00:56
g-Chlordane	ND	0.50	10	02/25/2016 00:56
p,p-DDD	ND	0.10	10	02/25/2016 00:56
p,p-DDE	ND	0.10	10	02/25/2016 00:56
p,p-DDT	ND	0.10	10	02/25/2016 00:56
Dieldrin	ND	0.10	10	02/25/2016 00:56
Endosulfan I	ND	0.20	10	02/25/2016 00:56
Endosulfan II	ND	0.20	10	02/25/2016 00:56
Endosulfan sulfate	ND	0.50	10	02/25/2016 00:56
Endrin	ND	0.10	10	02/25/2016 00:56
Endrin aldehyde	ND	0.50	10	02/25/2016 00:56
Endrin ketone	ND	0.50	10	02/25/2016 00:56
Heptachlor	ND	0.10	10	02/25/2016 00:56
Heptachlor epoxide	ND	0.10	10	02/25/2016 00:56
Hexachlorobenzene	ND	5.0	10	02/25/2016 00:56
Hexachlorocyclopentadiene	ND	10	10	02/25/2016 00:56
Methoxychlor	ND	1.0	10	02/25/2016 00:56
Toxaphene	ND	5.0	10	02/25/2016 00:56
Aroclor1016	ND	5.0	10	02/25/2016 00:56
Aroclor1221	ND	5.0	10	02/25/2016 00:56
Aroclor1232	ND	5.0	10	02/25/2016 00:56
Aroclor1242	ND	5.0	10	02/25/2016 00:56
Aroclor1248	ND	5.0	10	02/25/2016 00:56
Aroclor1254	ND	5.0	10	02/25/2016 00:56
Aroclor1260	ND	5.0	10	02/25/2016 00:56
PCBs, total	ND	5.0	10	02/25/2016 00:56

Surrogates	REC (%)	Limits	
Decachlorobiphenyl	101	70-130	02/25/2016 00:56

Analyst(s): CK

Analytical Comments: a3

McCampbell Analytical, Inc.
"When Quality Counts"

1534 Willow Pass Road, Pittsburg, CA 94565-1701
Toll Free Telephone: (877) 252-9262 / Fax: (925) 252-9269
http://www.mccampbell.com / E-mail: main@mccampbell.com

Analytical Report

Client:	AEW Engineering, Inc.	**WorkOrder:**	1602977
Date Received:	2/24/16 15:37	**Extraction Method:**	SW5030B
Date Prepared:	2/27/16	**Analytical Method:**	SW8260B
Project:	2015-29; Sausalito Gate 5 Characterization	**Unit:**	µg/L

Volatile Organics by P&T and GC/MS (Basic Target List)

Client ID	Lab ID	Matrix	Date Collected	Instrument	Batch ID
AEW-B9 GW	**1602977-001C**	**Water**	**02/24/2016 08:50**	**GC28**	**117278**

Analytes	Result	RL	DF	Date Analyzed
Acetone	ND	10	1	02/27/2016 04:15
tert-Amyl methyl ether (TAME)	ND	0.50	1	02/27/2016 04:15
Benzene	ND	0.50	1	02/27/2016 04:15
Bromobenzene	ND	0.50	1	02/27/2016 04:15
Bromochloromethane	ND	0.50	1	02/27/2016 04:15
Bromodichloromethane	ND	0.50	1	02/27/2016 04:15
Bromoform	ND	0.50	1	02/27/2016 04:15
Bromomethane	ND	0.50	1	02/27/2016 04:15
2-Butanone (MEK)	ND	2.0	1	02/27/2016 04:15
t-Butyl alcohol (TBA)	ND	2.0	1	02/27/2016 04:15
n-Butyl benzene	ND	0.50	1	02/27/2016 04:15
sec-Butyl benzene	ND	0.50	1	02/27/2016 04:15
tert-Butyl benzene	ND	0.50	1	02/27/2016 04:15
Carbon Disulfide	ND	0.50	1	02/27/2016 04:15
Carbon Tetrachloride	ND	0.50	1	02/27/2016 04:15
Chlorobenzene	ND	0.50	1	02/27/2016 04:15
Chloroethane	ND	0.50	1	02/27/2016 04:15
Chloroform	ND	0.50	1	02/27/2016 04:15
Chloromethane	ND	0.50	1	02/27/2016 04:15
2-Chlorotoluene	ND	0.50	1	02/27/2016 04:15
4-Chlorotoluene	ND	0.50	1	02/27/2016 04:15
Dibromochloromethane	ND	0.50	1	02/27/2016 04:15
1,2-Dibromo-3-chloropropane	ND	0.20	1	02/27/2016 04:15
1,2-Dibromoethane (EDB)	ND	0.50	1	02/27/2016 04:15
Dibromomethane	ND	0.50	1	02/27/2016 04:15
1,2-Dichlorobenzene	ND	0.50	1	02/27/2016 04:15
1,3-Dichlorobenzene	ND	0.50	1	02/27/2016 04:15
1,4-Dichlorobenzene	ND	0.50	1	02/27/2016 04:15
Dichlorodifluoromethane	ND	0.50	1	02/27/2016 04:15
1,1-Dichloroethane	ND	0.50	1	02/27/2016 04:15
1,2-Dichloroethane (1,2-DCA)	ND	0.50	1	02/27/2016 04:15
1,1-Dichloroethene	ND	0.50	1	02/27/2016 04:15
cis-1,2-Dichloroethene	ND	0.50	1	02/27/2016 04:15
trans-1,2-Dichloroethene	ND	0.50	1	02/27/2016 04:15
1,2-Dichloropropane	ND	0.50	1	02/27/2016 04:15
1,3-Dichloropropane	ND	0.50	1	02/27/2016 04:15
2,2-Dichloropropane	ND	0.50	1	02/27/2016 04:15

(Cont.)

McCampbell Analytical, Inc.
"When Quality Counts"

1534 Willow Pass Road, Pittsburg, CA 94565-1701
Toll Free Telephone: (877) 252-9262 / Fax: (925) 252-9269
http://www.mccampbell.com / E-mail: main@mccampbell.com

Analytical Report

Client:	AEW Engineering, Inc.	**WorkOrder:**	1602977
Date Received:	2/24/16 15:37	**Extraction Method:**	SW5030B
Date Prepared:	2/27/16	**Analytical Method:**	SW8260B
Project:	2015-29; Sausalito Gate 5 Characterization	**Unit:**	µg/L

Volatile Organics by P&T and GC/MS (Basic Target List)

Client ID	Lab ID	Matrix	Date Collected	Instrument	Batch ID
AEW-B9 GW	**1602977-001C**	**Water**	**02/24/2016 08:50**	**GC28**	**117278**

Analytes	Result	RL	DF	Date Analyzed
1,1-Dichloropropene	ND	0.50	1	02/27/2016 04:15
cis-1,3-Dichloropropene	ND	0.50	1	02/27/2016 04:15
trans-1,3-Dichloropropene	ND	0.50	1	02/27/2016 04:15
Diisopropyl ether (DIPE)	ND	0.50	1	02/27/2016 04:15
Ethylbenzene	ND	0.50	1	02/27/2016 04:15
Ethyl tert-butyl ether (ETBE)	ND	0.50	1	02/27/2016 04:15
Freon 113	ND	0.50	1	02/27/2016 04:15
Hexachlorobutadiene	ND	0.50	1	02/27/2016 04:15
Hexachloroethane	ND	0.50	1	02/27/2016 04:15
2-Hexanone	ND	0.50	1	02/27/2016 04:15
Isopropylbenzene	ND	0.50	1	02/27/2016 04:15
4-Isopropyl toluene	ND	0.50	1	02/27/2016 04:15
Methyl-t-butyl ether (MTBE)	ND	0.50	1	02/27/2016 04:15
Methylene chloride	ND	0.50	1	02/27/2016 04:15
4-Methyl-2-pentanone (MIBK)	ND	0.50	1	02/27/2016 04:15
Naphthalene	ND	0.50	1	02/27/2016 04:15
n-Propyl benzene	ND	0.50	1	02/27/2016 04:15
Styrene	ND	0.50	1	02/27/2016 04:15
1,1,1,2-Tetrachloroethane	ND	0.50	1	02/27/2016 04:15
1,1,2,2-Tetrachloroethane	ND	0.50	1	02/27/2016 04:15
Tetrachloroethene	ND	0.50	1	02/27/2016 04:15
Toluene	ND	0.50	1	02/27/2016 04:15
1,2,3-Trichlorobenzene	ND	0.50	1	02/27/2016 04:15
1,2,4-Trichlorobenzene	ND	0.50	1	02/27/2016 04:15
1,1,1-Trichloroethane	ND	0.50	1	02/27/2016 04:15
1,1,2-Trichloroethane	ND	0.50	1	02/27/2016 04:15
Trichloroethene	ND	0.50	1	02/27/2016 04:15
Trichlorofluoromethane	ND	0.50	1	02/27/2016 04:15
1,2,3-Trichloropropane	ND	0.50	1	02/27/2016 04:15
1,2,4-Trimethylbenzene	ND	0.50	1	02/27/2016 04:15
1,3,5-Trimethylbenzene	ND	0.50	1	02/27/2016 04:15
Vinyl Chloride	ND	0.50	1	02/27/2016 04:15
Xylenes, Total	ND	0.50	1	02/27/2016 04:15

(Cont.)

McCampbell Analytical, Inc.
"When Quality Counts"

1534 Willow Pass Road, Pittsburg, CA 94565-1701
Toll Free Telephone: (877) 252-9262 / Fax: (925) 252-9269
http://www.mccampbell.com / E-mail: main@mccampbell.com

Analytical Report

Client:	AEW Engineering, Inc.	**WorkOrder:**	1602977
Date Received:	2/24/16 15:37	**Extraction Method:**	SW5030B
Date Prepared:	2/27/16	**Analytical Method:**	SW8260B
Project:	2015-29; Sausalito Gate 5 Characterization	**Unit:**	µg/L

Volatile Organics by P&T and GC/MS (Basic Target List)

Client ID	Lab ID	Matrix	Date Collected	Instrument	Batch ID
AEW-B9 GW	**1602977-001C**	**Water**	**02/24/2016 08:50**	**GC28**	**117278**

Analytes	Result		RL	DF	Date Analyzed
Surrogates	REC (%)	Qualifiers	Limits		
Dibromofluoromethane	119		70-130		02/27/2016 04:15
Toluene-d8	115		70-130		02/27/2016 04:15
4-BFB	68	S	70-130		02/27/2016 04:15

Analyst(s): AK Analytical Comments: c2

(Cont.)

McCampbell Analytical, Inc.
"When Quality Counts"

1534 Willow Pass Road, Pittsburg, CA 94565-1701
Toll Free Telephone: (877) 252-9262 / Fax: (925) 252-9269
http://www.mccampbell.com / E-mail: main@mccampbell.com

Analytical Report

Client:	AEW Engineering, Inc.	**WorkOrder:**	1602977
Date Received:	2/24/16 15:37	**Extraction Method:**	SW5030B
Date Prepared:	2/27/16	**Analytical Method:**	SW8260B
Project:	2015-29; Sausalito Gate 5 Characterization	**Unit:**	µg/L

Volatile Organics by P&T and GC/MS (Basic Target List)

Client ID	Lab ID	Matrix	Date Collected	Instrument	Batch ID
AEW-B2 GW	**1602977-002C**	**Water**	**02/24/2016 11:10**	**GC28**	**117278**

Analytes	Result	RL	DF	Date Analyzed
Acetone	ND	10	1	02/27/2016 04:54
tert-Amyl methyl ether (TAME)	ND	0.50	1	02/27/2016 04:54
Benzene	ND	0.50	1	02/27/2016 04:54
Bromobenzene	ND	0.50	1	02/27/2016 04:54
Bromochloromethane	ND	0.50	1	02/27/2016 04:54
Bromodichloromethane	ND	0.50	1	02/27/2016 04:54
Bromoform	ND	0.50	1	02/27/2016 04:54
Bromomethane	ND	0.50	1	02/27/2016 04:54
2-Butanone (MEK)	ND	2.0	1	02/27/2016 04:54
t-Butyl alcohol (TBA)	ND	2.0	1	02/27/2016 04:54
n-Butyl benzene	ND	0.50	1	02/27/2016 04:54
sec-Butyl benzene	ND	0.50	1	02/27/2016 04:54
tert-Butyl benzene	ND	0.50	1	02/27/2016 04:54
Carbon Disulfide	**4.9**	0.50	1	02/27/2016 04:54
Carbon Tetrachloride	ND	0.50	1	02/27/2016 04:54
Chlorobenzene	ND	0.50	1	02/27/2016 04:54
Chloroethane	ND	0.50	1	02/27/2016 04:54
Chloroform	ND	0.50	1	02/27/2016 04:54
Chloromethane	ND	0.50	1	02/27/2016 04:54
2-Chlorotoluene	ND	0.50	1	02/27/2016 04:54
4-Chlorotoluene	ND	0.50	1	02/27/2016 04:54
Dibromochloromethane	ND	0.50	1	02/27/2016 04:54
1,2-Dibromo-3-chloropropane	ND	0.20	1	02/27/2016 04:54
1,2-Dibromoethane (EDB)	ND	0.50	1	02/27/2016 04:54
Dibromomethane	ND	0.50	1	02/27/2016 04:54
1,2-Dichlorobenzene	ND	0.50	1	02/27/2016 04:54
1,3-Dichlorobenzene	ND	0.50	1	02/27/2016 04:54
1,4-Dichlorobenzene	ND	0.50	1	02/27/2016 04:54
Dichlorodifluoromethane	ND	0.50	1	02/27/2016 04:54
1,1-Dichloroethane	ND	0.50	1	02/27/2016 04:54
1,2-Dichloroethane (1,2-DCA)	ND	0.50	1	02/27/2016 04:54
1,1-Dichloroethene	ND	0.50	1	02/27/2016 04:54
cis-1,2-Dichloroethene	ND	0.50	1	02/27/2016 04:54
trans-1,2-Dichloroethene	ND	0.50	1	02/27/2016 04:54
1,2-Dichloropropane	ND	0.50	1	02/27/2016 04:54
1,3-Dichloropropane	ND	0.50	1	02/27/2016 04:54
2,2-Dichloropropane	ND	0.50	1	02/27/2016 04:54

(Cont.)

McCampbell Analytical, Inc.
"When Quality Counts"

1534 Willow Pass Road, Pittsburg, CA 94565-1701
Toll Free Telephone: (877) 252-9262 / Fax: (925) 252-9269
http://www.mccampbell.com / E-mail: main@mccampbell.com

Analytical Report

Client:	AEW Engineering, Inc.	**WorkOrder:**	1602977
Date Received:	2/24/16 15:37	**Extraction Method:**	SW5030B
Date Prepared:	2/27/16	**Analytical Method:**	SW8260B
Project:	2015-29; Sausalito Gate 5 Characterization	**Unit:**	µg/L

Volatile Organics by P&T and GC/MS (Basic Target List)

Client ID	Lab ID	Matrix	Date Collected	Instrument	Batch ID
AEW-B2 GW	**1602977-002C**	**Water**	**02/24/2016 11:10**	**GC28**	**117278**

Analytes	Result	RL	DF	Date Analyzed
1,1-Dichloropropene	ND	0.50	1	02/27/2016 04:54
cis-1,3-Dichloropropene	ND	0.50	1	02/27/2016 04:54
trans-1,3-Dichloropropene	ND	0.50	1	02/27/2016 04:54
Diisopropyl ether (DIPE)	ND	0.50	1	02/27/2016 04:54
Ethylbenzene	ND	0.50	1	02/27/2016 04:54
Ethyl tert-butyl ether (ETBE)	ND	0.50	1	02/27/2016 04:54
Freon 113	ND	0.50	1	02/27/2016 04:54
Hexachlorobutadiene	ND	0.50	1	02/27/2016 04:54
Hexachloroethane	ND	0.50	1	02/27/2016 04:54
2-Hexanone	ND	0.50	1	02/27/2016 04:54
Isopropylbenzene	ND	0.50	1	02/27/2016 04:54
4-Isopropyl toluene	ND	0.50	1	02/27/2016 04:54
Methyl-t-butyl ether (MTBE)	**1.6**	0.50	1	02/27/2016 04:54
Methylene chloride	ND	0.50	1	02/27/2016 04:54
4-Methyl-2-pentanone (MIBK)	ND	0.50	1	02/27/2016 04:54
Naphthalene	ND	0.50	1	02/27/2016 04:54
n-Propyl benzene	ND	0.50	1	02/27/2016 04:54
Styrene	ND	0.50	1	02/27/2016 04:54
1,1,1,2-Tetrachloroethane	ND	0.50	1	02/27/2016 04:54
1,1,2,2-Tetrachloroethane	ND	0.50	1	02/27/2016 04:54
Tetrachloroethene	ND	0.50	1	02/27/2016 04:54
Toluene	ND	0.50	1	02/27/2016 04:54
1,2,3-Trichlorobenzene	ND	0.50	1	02/27/2016 04:54
1,2,4-Trichlorobenzene	ND	0.50	1	02/27/2016 04:54
1,1,1-Trichloroethane	ND	0.50	1	02/27/2016 04:54
1,1,2-Trichloroethane	ND	0.50	1	02/27/2016 04:54
Trichloroethene	ND	0.50	1	02/27/2016 04:54
Trichlorofluoromethane	ND	0.50	1	02/27/2016 04:54
1,2,3-Trichloropropane	ND	0.50	1	02/27/2016 04:54
1,2,4-Trimethylbenzene	ND	0.50	1	02/27/2016 04:54
1,3,5-Trimethylbenzene	ND	0.50	1	02/27/2016 04:54
Vinyl Chloride	ND	0.50	1	02/27/2016 04:54
Xylenes, Total	ND	0.50	1	02/27/2016 04:54

(Cont.)

McCampbell Analytical, Inc.
"When Quality Counts"

1534 Willow Pass Road, Pittsburg, CA 94565-1701
Toll Free Telephone: (877) 252-9262 / Fax: (925) 252-9269
http://www.mccampbell.com / E-mail: main@mccampbell.com

Analytical Report

Client:	AEW Engineering, Inc.	**WorkOrder:**	1602977
Date Received:	2/24/16 15:37	**Extraction Method:**	SW5030B
Date Prepared:	2/27/16	**Analytical Method:**	SW8260B
Project:	2015-29; Sausalito Gate 5 Characterization	**Unit:**	µg/L

Volatile Organics by P&T and GC/MS (Basic Target List)

Client ID	Lab ID	Matrix	Date Collected	Instrument	Batch ID
AEW-B2 GW	**1602977-002C**	**Water**	**02/24/2016 11:10**	**GC28**	**117278**

Analytes	Result	RL	DF	Date Analyzed
Surrogates	REC (%)	Limits		
Dibromofluoromethane	120	70-130		02/27/2016 04:54
Toluene-d8	114	70-130		02/27/2016 04:54
4-BFB	72	70-130		02/27/2016 04:54

Analyst(s): AK

McCampbell Analytical, Inc.
"When Quality Counts"

1534 Willow Pass Road, Pittsburg, CA 94565-1701
Toll Free Telephone: (877) 252-9262 / Fax: (925) 252-9269
http://www.mccampbell.com / E-mail: main@mccampbell.com

Analytical Report

Client:	AEW Engineering, Inc.	**WorkOrder:**	1602977
Date Received:	2/24/16 15:37	**Extraction Method:**	SW3510C / SW3640A
Date Prepared:	2/25/16	**Analytical Method:**	SW8270C
Project:	2015-29; Sausalito Gate 5 Characterization	**Unit:**	µg/L

Semi-Volatile Organics with GPC Clean Up by GC/MS (Basic Target List)

Client ID	Lab ID	Matrix	Date Collected	Instrument	Batch ID
AEW-B9 GW	**1602977-001D**	**Water**	**02/24/2016 08:50**	**GC21**	**117208**

Analytes	Result	RL	DF	Date Analyzed
Acenaphthene	ND	10	5	02/26/2016 17:12
Acenaphthylene	ND	10	5	02/26/2016 17:12
Acetochlor	ND	10	5	02/26/2016 17:12
Anthracene	ND	10	5	02/26/2016 17:12
Benzidine	ND	50	5	02/26/2016 17:12
Benzo (a) anthracene	ND	10	5	02/26/2016 17:12
Benzo (a) pyrene	ND	10	5	02/26/2016 17:12
Benzo (b) fluoranthene	ND	10	5	02/26/2016 17:12
Benzo (g,h,i) perylene	ND	10	5	02/26/2016 17:12
Benzo (k) fluoranthene	ND	10	5	02/26/2016 17:12
Benzyl Alcohol	ND	50	5	02/26/2016 17:12
1,1-Biphenyl	ND	10	5	02/26/2016 17:12
Bis (2-chloroethoxy) Methane	ND	10	5	02/26/2016 17:12
Bis (2-chloroethyl) Ether	ND	10	5	02/26/2016 17:12
Bis (2-chloroisopropyl) Ether	ND	10	5	02/26/2016 17:12
Bis (2-ethylhexyl) Adipate	ND	10	5	02/26/2016 17:12
Bis (2-ethylhexyl) Phthalate	ND	20	5	02/26/2016 17:12
4-Bromophenyl Phenyl Ether	ND	50	5	02/26/2016 17:12
Butylbenzyl Phthalate	ND	10	5	02/26/2016 17:12
4-Chloroaniline	ND	20	5	02/26/2016 17:12
4-Chloro-3-methylphenol	ND	50	5	02/26/2016 17:12
1-Chloronaphthalene	ND	50	5	02/26/2016 17:12
2-Chloronaphthalene	ND	10	5	02/26/2016 17:12
2-Chlorophenol	ND	10	5	02/26/2016 17:12
4-Chlorophenyl Phenyl Ether	ND	10	5	02/26/2016 17:12
Chrysene	ND	10	5	02/26/2016 17:12
Dibenzo (a,h) anthracene	ND	10	5	02/26/2016 17:12
Dibenzofuran	ND	10	5	02/26/2016 17:12
Di-n-butyl Phthalate	ND	10	5	02/26/2016 17:12
1,2-Dichlorobenzene	ND	10	5	02/26/2016 17:12
1,3-Dichlorobenzene	ND	10	5	02/26/2016 17:12
1,4-Dichlorobenzene	ND	10	5	02/26/2016 17:12
3,3-Dichlorobenzidine	ND	20	5	02/26/2016 17:12
2,4-Dichlorophenol	ND	10	5	02/26/2016 17:12
Diethyl Phthalate	ND	10	5	02/26/2016 17:12
2,4-Dimethylphenol	ND	10	5	02/26/2016 17:12
Dimethyl Phthalate	ND	10	5	02/26/2016 17:12

(Cont.)

McCampbell Analytical, Inc.
"When Quality Counts"

1534 Willow Pass Road, Pittsburg, CA 94565-1701
Toll Free Telephone: (877) 252-9262 / Fax: (925) 252-9269
http://www.mccampbell.com / E-mail: main@mccampbell.com

Analytical Report

Client:	AEW Engineering, Inc.	**WorkOrder:**	1602977
Date Received:	2/24/16 15:37	**Extraction Method:**	SW3510C / SW3640A
Date Prepared:	2/25/16	**Analytical Method:**	SW8270C
Project:	2015-29; Sausalito Gate 5 Characterization	**Unit:**	µg/L

Semi-Volatile Organics with GPC Clean Up by GC/MS (Basic Target List)

Client ID	Lab ID	Matrix	Date Collected	Instrument	Batch ID
AEW-B9 GW	**1602977-001D**	**Water**	**02/24/2016 08:50**	**GC21**	**117208**

Analytes	Result	RL	DF	Date Analyzed
4,6-Dinitro-2-methylphenol	ND	50	5	02/26/2016 17:12
2,4-Dinitrophenol	ND	120	5	02/26/2016 17:12
2,4-Dinitrotoluene	ND	10	5	02/26/2016 17:12
2,6-Dinitrotoluene	ND	10	5	02/26/2016 17:12
Di-n-octyl Phthalate	ND	10	5	02/26/2016 17:12
1,2-Diphenylhydrazine	ND	10	5	02/26/2016 17:12
Fluoranthene	ND	10	5	02/26/2016 17:12
Fluorene	ND	10	5	02/26/2016 17:12
Hexachlorobenzene	ND	10	5	02/26/2016 17:12
Hexachlorobutadiene	ND	10	5	02/26/2016 17:12
Hexachlorocyclopentadiene	ND	50	5	02/26/2016 17:12
Hexachloroethane	ND	10	5	02/26/2016 17:12
Indeno (1,2,3-cd) pyrene	ND	10	5	02/26/2016 17:12
Isophorone	ND	10	5	02/26/2016 17:12
2-Methylnaphthalene	ND	10	5	02/26/2016 17:12
2-Methylphenol (o-Cresol)	ND	10	5	02/26/2016 17:12
3 & 4-Methylphenol (m,p-Cresol)	ND	10	5	02/26/2016 17:12
Naphthalene	ND	10	5	02/26/2016 17:12
2-Nitroaniline	ND	50	5	02/26/2016 17:12
3-Nitroaniline	ND	50	5	02/26/2016 17:12
4-Nitroaniline	ND	50	5	02/26/2016 17:12
Nitrobenzene	ND	10	5	02/26/2016 17:12
2-Nitrophenol	ND	50	5	02/26/2016 17:12
4-Nitrophenol	ND	50	5	02/26/2016 17:12
N-Nitrosodiphenylamine	ND	10	5	02/26/2016 17:12
N-Nitrosodi-n-propylamine	ND	10	5	02/26/2016 17:12
Pentachlorophenol	ND	50	5	02/26/2016 17:12
Phenanthrene	ND	10	5	02/26/2016 17:12
Phenol	ND	10	5	02/26/2016 17:12
Pyrene	ND	10	5	02/26/2016 17:12
1,2,4-Trichlorobenzene	ND	10	5	02/26/2016 17:12
2,4,5-Trichlorophenol	ND	10	5	02/26/2016 17:12
2,4,6-Trichlorophenol	ND	10	5	02/26/2016 17:12

(Cont.)

McCampbell Analytical, Inc.
"When Quality Counts"

1534 Willow Pass Road, Pittsburg, CA 94565-1701
Toll Free Telephone: (877) 252-9262 / Fax: (925) 252-9269
http://www.mccampbell.com / E-mail: main@mccampbell.com

Analytical Report

Client:	AEW Engineering, Inc.	**WorkOrder:**	1602977
Date Received:	2/24/16 15:37	**Extraction Method:**	SW3510C / SW3640A
Date Prepared:	2/25/16	**Analytical Method:**	SW8270C
Project:	2015-29; Sausalito Gate 5 Characterization	**Unit:**	µg/L

Semi-Volatile Organics with GPC Clean Up by GC/MS (Basic Target List)

Client ID	Lab ID	Matrix	Date Collected	Instrument	Batch ID
AEW-B9 GW	**1602977-001D**	**Water**	**02/24/2016 08:50**	**GC21**	**117208**

Analytes	Result		RL	DF	Date Analyzed
Surrogates	REC (%)	Qualifiers	Limits		
2-Fluorophenol	5	S	8-180		02/26/2016 17:12
Phenol-d5	23		5-100		02/26/2016 17:12
Nitrobenzene-d5	74		20-140		02/26/2016 17:12
2-Fluorobiphenyl	107		35-140		02/26/2016 17:12
2,4,6-Tribromophenol	29		16-180		02/26/2016 17:12
4-Terphenyl-d14	168		40-170		02/26/2016 17:12

Analyst(s): REB

Analytical Comments: a3,c2

(Cont.)

McCampbell Analytical, Inc.
"When Quality Counts"

1534 Willow Pass Road, Pittsburg, CA 94565-1701
Toll Free Telephone: (877) 252-9262 / Fax: (925) 252-9269
http://www.mccampbell.com / E-mail: main@mccampbell.com

Analytical Report

Client:	AEW Engineering, Inc.	**WorkOrder:**	1602977
Date Received:	2/24/16 15:37	**Extraction Method:**	SW3510C / SW3640A
Date Prepared:	2/25/16	**Analytical Method:**	SW8270C
Project:	2015-29; Sausalito Gate 5 Characterization	**Unit:**	µg/L

Semi-Volatile Organics with GPC Clean Up by GC/MS (Basic Target List)

Client ID	Lab ID	Matrix	Date Collected	Instrument	Batch ID
AEW-B2 GW	**1602977-002D**	**Water**	**02/24/2016 11:10**	**GC21**	**117208**

Analytes	Result	RL	DF	Date Analyzed
Acenaphthene	ND	10	5	02/26/2016 17:40
Acenaphthylene	ND	10	5	02/26/2016 17:40
Acetochlor	ND	10	5	02/26/2016 17:40
Anthracene	ND	10	5	02/26/2016 17:40
Benzidine	ND	50	5	02/26/2016 17:40
Benzo (a) anthracene	ND	10	5	02/26/2016 17:40
Benzo (a) pyrene	ND	10	5	02/26/2016 17:40
Benzo (b) fluoranthene	ND	10	5	02/26/2016 17:40
Benzo (g,h,i) perylene	ND	10	5	02/26/2016 17:40
Benzo (k) fluoranthene	ND	10	5	02/26/2016 17:40
Benzyl Alcohol	ND	50	5	02/26/2016 17:40
1,1-Biphenyl	ND	10	5	02/26/2016 17:40
Bis (2-chloroethoxy) Methane	ND	10	5	02/26/2016 17:40
Bis (2-chloroethyl) Ether	ND	10	5	02/26/2016 17:40
Bis (2-chloroisopropyl) Ether	ND	10	5	02/26/2016 17:40
Bis (2-ethylhexyl) Adipate	ND	10	5	02/26/2016 17:40
Bis (2-ethylhexyl) Phthalate	ND	20	5	02/26/2016 17:40
4-Bromophenyl Phenyl Ether	ND	50	5	02/26/2016 17:40
Butylbenzyl Phthalate	ND	10	5	02/26/2016 17:40
4-Chloroaniline	ND	20	5	02/26/2016 17:40
4-Chloro-3-methylphenol	ND	50	5	02/26/2016 17:40
1-Chloronaphthalene	ND	50	5	02/26/2016 17:40
2-Chloronaphthalene	ND	10	5	02/26/2016 17:40
2-Chlorophenol	ND	10	5	02/26/2016 17:40
4-Chlorophenyl Phenyl Ether	ND	10	5	02/26/2016 17:40
Chrysene	ND	10	5	02/26/2016 17:40
Dibenzo (a,h) anthracene	ND	10	5	02/26/2016 17:40
Dibenzofuran	ND	10	5	02/26/2016 17:40
Di-n-butyl Phthalate	ND	10	5	02/26/2016 17:40
1,2-Dichlorobenzene	ND	10	5	02/26/2016 17:40
1,3-Dichlorobenzene	ND	10	5	02/26/2016 17:40
1,4-Dichlorobenzene	ND	10	5	02/26/2016 17:40
3,3-Dichlorobenzidine	ND	20	5	02/26/2016 17:40
2,4-Dichlorophenol	ND	10	5	02/26/2016 17:40
Diethyl Phthalate	ND	10	5	02/26/2016 17:40
2,4-Dimethylphenol	ND	10	5	02/26/2016 17:40
Dimethyl Phthalate	ND	10	5	02/26/2016 17:40

(Cont.)

McCampbell Analytical, Inc.
"When Quality Counts"

1534 Willow Pass Road, Pittsburg, CA 94565-1701
Toll Free Telephone: (877) 252-9262 / Fax: (925) 252-9269
http://www.mccampbell.com / E-mail: main@mccampbell.com

Analytical Report

Client:	AEW Engineering, Inc.	**WorkOrder:**	1602977
Date Received:	2/24/16 15:37	**Extraction Method:**	SW3510C / SW3640A
Date Prepared:	2/25/16	**Analytical Method:**	SW8270C
Project:	2015-29; Sausalito Gate 5 Characterization	**Unit:**	µg/L

Semi-Volatile Organics with GPC Clean Up by GC/MS (Basic Target List)

Client ID	Lab ID	Matrix	Date Collected	Instrument	Batch ID
AEW-B2 GW	**1602977-002D**	**Water**	**02/24/2016 11:10**	**GC21**	**117208**

Analytes	Result	RL	DF	Date Analyzed
4,6-Dinitro-2-methylphenol	ND	50	5	02/26/2016 17:40
2,4-Dinitrophenol	ND	120	5	02/26/2016 17:40
2,4-Dinitrotoluene	ND	10	5	02/26/2016 17:40
2,6-Dinitrotoluene	ND	10	5	02/26/2016 17:40
Di-n-octyl Phthalate	ND	10	5	02/26/2016 17:40
1,2-Diphenylhydrazine	ND	10	5	02/26/2016 17:40
Fluoranthene	ND	10	5	02/26/2016 17:40
Fluorene	ND	10	5	02/26/2016 17:40
Hexachlorobenzene	ND	10	5	02/26/2016 17:40
Hexachlorobutadiene	ND	10	5	02/26/2016 17:40
Hexachlorocyclopentadiene	ND	50	5	02/26/2016 17:40
Hexachloroethane	ND	10	5	02/26/2016 17:40
Indeno (1,2,3-cd) pyrene	ND	10	5	02/26/2016 17:40
Isophorone	ND	10	5	02/26/2016 17:40
2-Methylnaphthalene	ND	10	5	02/26/2016 17:40
2-Methylphenol (o-Cresol)	ND	10	5	02/26/2016 17:40
3 & 4-Methylphenol (m,p-Cresol)	ND	10	5	02/26/2016 17:40
Naphthalene	ND	10	5	02/26/2016 17:40
2-Nitroaniline	ND	50	5	02/26/2016 17:40
3-Nitroaniline	ND	50	5	02/26/2016 17:40
4-Nitroaniline	ND	50	5	02/26/2016 17:40
Nitrobenzene	ND	10	5	02/26/2016 17:40
2-Nitrophenol	ND	50	5	02/26/2016 17:40
4-Nitrophenol	ND	50	5	02/26/2016 17:40
N-Nitrosodiphenylamine	ND	10	5	02/26/2016 17:40
N-Nitrosodi-n-propylamine	ND	10	5	02/26/2016 17:40
Pentachlorophenol	ND	50	5	02/26/2016 17:40
Phenanthrene	ND	10	5	02/26/2016 17:40
Phenol	ND	10	5	02/26/2016 17:40
Pyrene	ND	10	5	02/26/2016 17:40
1,2,4-Trichlorobenzene	ND	10	5	02/26/2016 17:40
2,4,5-Trichlorophenol	ND	10	5	02/26/2016 17:40
2,4,6-Trichlorophenol	ND	10	5	02/26/2016 17:40

(Cont.)

McCampbell Analytical, Inc.
"When Quality Counts"

1534 Willow Pass Road, Pittsburg, CA 94565-1701
Toll Free Telephone: (877) 252-9262 / Fax: (925) 252-9269
http://www.mccampbell.com / E-mail: main@mccampbell.com

Analytical Report

Client:	AEW Engineering, Inc.	**WorkOrder:**	1602977
Date Received:	2/24/16 15:37	**Extraction Method:**	SW3510C / SW3640A
Date Prepared:	2/25/16	**Analytical Method:**	SW8270C
Project:	2015-29; Sausalito Gate 5 Characterization	**Unit:**	µg/L

Semi-Volatile Organics with GPC Clean Up by GC/MS (Basic Target List)

Client ID	Lab ID	Matrix	Date Collected	Instrument	Batch ID
AEW-B2 GW	**1602977-002D**	**Water**	**02/24/2016 11:10**	**GC21**	**117208**

Analytes	Result		RL	DF	Date Analyzed
Surrogates	REC (%)	Qualifiers	Limits		
2-Fluorophenol	3	S	8-180		02/26/2016 17:40
Phenol-d5	14		5-100		02/26/2016 17:40
Nitrobenzene-d5	63		20-140		02/26/2016 17:40
2-Fluorobiphenyl	81		35-140		02/26/2016 17:40
2,4,6-Tribromophenol	7	S	16-180		02/26/2016 17:40
4-Terphenyl-d14	114		40-170		02/26/2016 17:40

Analyst(s): REB

Analytical Comments: a3,c2

McCampbell Analytical, Inc.
"When Quality Counts"

1534 Willow Pass Road, Pittsburg, CA 94565-1701
Toll Free Telephone: (877) 252-9262 / Fax: (925) 252-9269
http://www.mccampbell.com / E-mail: main@mccampbell.com

Analytical Report

Client:	AEW Engineering, Inc.	**WorkOrder:**	1602977
Date Received:	2/24/16 15:37	**Extraction Method:**	E200.8
Date Prepared:	2/24/16	**Analytical Method:**	E200.8
Project:	2015-29; Sausalito Gate 5 Characterization	**Unit:**	µg/L

Dissolved CAM / CCR 17 Metals

Client ID	Lab ID	Matrix	Date Collected	Instrument	Batch ID
AEW-B9 GW	**1602977-001J**	**Water**	**02/24/2016 08:50**	**ICP-MS2**	**117114**

Analytes	Result	Qualifiers	RL	DF	Date Analyzed
Antimony	ND	F	5.0	10	02/25/2016 22:51
Arsenic	ND	F	5.0	10	02/25/2016 22:51
Barium	**230**	F	50	10	02/25/2016 22:51
Beryllium	ND	F	5.0	10	02/25/2016 22:51
Cadmium	ND	F	2.5	10	02/25/2016 22:51
Chromium	ND	F	5.0	10	02/25/2016 22:51
Cobalt	**21**	F	5.0	10	02/25/2016 22:51
Copper	ND	F	20	10	02/25/2016 22:51
Lead	ND	F	5.0	10	02/25/2016 22:51
Mercury	ND	F	0.25	10	02/25/2016 22:51
Molybdenum	**8.4**	F	5.0	10	02/25/2016 22:51
Nickel	**18**	F	5.0	10	02/25/2016 22:51
Selenium	ND	F	5.0	10	02/25/2016 22:51
Silver	ND	F	1.9	10	02/25/2016 22:51
Thallium	ND	F	5.0	10	02/25/2016 22:51
Vanadium	ND	F	5.0	10	02/25/2016 22:51
Zinc	ND	F	150	10	02/25/2016 22:51

Analyst(s): BBO

Analytical Comments: a1

(Cont.)

CDPH ELAP 1644 ♦ NELAP 4033ORELAP

Angela Rydelius, Lab Manager

McCampbell Analytical, Inc.
"When Quality Counts"

1534 Willow Pass Road, Pittsburg, CA 94565-1701
Toll Free Telephone: (877) 252-9262 / Fax: (925) 252-9269
http://www.mccampbell.com / E-mail: main@mccampbell.com

Analytical Report

Client:	AEW Engineering, Inc.	**WorkOrder:**	1602977
Date Received:	2/24/16 15:37	**Extraction Method:**	E200.8
Date Prepared:	2/24/16	**Analytical Method:**	E200.8
Project:	2015-29; Sausalito Gate 5 Characterization	**Unit:**	µg/L

Dissolved CAM / CCR 17 Metals

Client ID	Lab ID	Matrix	Date Collected	Instrument	Batch ID
AEW-B2 GW	**1602977-002J**	**Water**	**02/24/2016 11:10**	**ICP-MS2**	**117114**

Analytes	Result	Qualifiers	RL	DF	Date Analyzed
Antimony	ND	F	5.0	10	02/25/2016 23:16
Arsenic	**10**	F	5.0	10	02/25/2016 23:16
Barium	**350**	F	50	10	02/25/2016 23:16
Beryllium	ND	F	5.0	10	02/25/2016 23:16
Cadmium	ND	F	2.5	10	02/25/2016 23:16
Chromium	ND	F	5.0	10	02/25/2016 23:16
Cobalt	ND	F	5.0	10	02/25/2016 23:16
Copper	ND	F	20	10	02/25/2016 23:16
Lead	ND	F	5.0	10	02/25/2016 23:16
Mercury	ND	F	0.25	10	02/25/2016 23:16
Molybdenum	**14**	F	5.0	10	02/25/2016 23:16
Nickel	**11**	F	5.0	10	02/25/2016 23:16
Selenium	ND	F	5.0	10	02/25/2016 23:16
Silver	ND	F	1.9	10	02/25/2016 23:16
Thallium	ND	F	5.0	10	02/25/2016 23:16
Vanadium	ND	F	5.0	10	02/25/2016 23:16
Zinc	ND	F	150	10	02/25/2016 23:16

Analyst(s): BBO

Analytical Comments: a1

McCampbell Analytical, Inc.
"When Quality Counts"

1534 Willow Pass Road, Pittsburg, CA 94565-1701
Toll Free Telephone: (877) 252-9262 / Fax: (925) 252-9269
http://www.mccampbell.com / E-mail: main@mccampbell.com

Analytical Report

Client:	AEW Engineering, Inc.	**WorkOrder:**	1602977
Date Received:	2/24/16 15:37	**Extraction Method:**	E200.8
Date Prepared:	2/24/16	**Analytical Method:**	E200.8
Project:	2015-29; Sausalito Gate 5 Characterization	**Unit:**	µg/L

CAM / CCR 17 Metals

Client ID	Lab ID	Matrix	Date Collected	Instrument	Batch ID
AEW-B9 GW	**1602977-001F**	**Water**	**02/24/2016 08:50**	**ICP-MS2**	**117152**

Analytes	Result	RL	DF	Date Analyzed
Antimony	ND	10	20	02/25/2016 16:36
Arsenic	**22**	10	20	02/25/2016 16:36
Barium	**4700**	100	20	02/25/2016 16:36
Beryllium	ND	10	20	02/25/2016 16:36
Cadmium	ND	5.0	20	02/25/2016 16:36
Chromium	**830**	10	20	02/25/2016 16:36
Cobalt	**240**	10	20	02/25/2016 16:36
Copper	**510**	40	20	02/25/2016 16:36
Lead	**210**	10	20	02/25/2016 16:36
Mercury	**3.0**	0.50	20	02/25/2016 16:36
Molybdenum	ND	10	20	02/25/2016 16:36
Nickel	**1200**	10	20	02/25/2016 16:36
Selenium	ND	10	20	02/25/2016 16:36
Silver	ND	3.8	20	02/25/2016 16:36
Thallium	ND	10	20	02/25/2016 16:36
Vanadium	**360**	10	20	02/25/2016 16:36
Zinc	**900**	300	20	02/25/2016 16:36

Surrogates	REC (%)	Limits	
Terbium	107	70-130	02/25/2016 16:36

Analyst(s): AC

Analytical Comments: a1

(Cont.)

McCampbell Analytical, Inc.
"When Quality Counts"

1534 Willow Pass Road, Pittsburg, CA 94565-1701
Toll Free Telephone: (877) 252-9262 / Fax: (925) 252-9269
http://www.mccampbell.com / E-mail: main@mccampbell.com

Analytical Report

Client:	AEW Engineering, Inc.	**WorkOrder:**	1602977
Date Received:	2/24/16 15:37	**Extraction Method:**	E200.8
Date Prepared:	2/24/16	**Analytical Method:**	E200.8
Project:	2015-29; Sausalito Gate 5 Characterization	**Unit:**	µg/L

CAM / CCR 17 Metals

Client ID	Lab ID	Matrix	Date Collected	Instrument	Batch ID
AEW-B2 GW	**1602977-002F**	**Water**	**02/24/2016 11:10**	**ICP-MS2**	**117152**

Analytes	Result	RL	DF	Date Analyzed
Antimony	ND	10	20	02/25/2016 16:42
Arsenic	**150**	10	20	02/25/2016 16:42
Barium	**2500**	100	20	02/25/2016 16:42
Beryllium	ND	10	20	02/25/2016 16:42
Cadmium	ND	5.0	20	02/25/2016 16:42
Chromium	**1600**	10	20	02/25/2016 16:42
Cobalt	**300**	10	20	02/25/2016 16:42
Copper	**700**	40	20	02/25/2016 16:42
Lead	**730**	10	20	02/25/2016 16:42
Mercury	**2.0**	0.50	20	02/25/2016 16:42
Molybdenum	**22**	10	20	02/25/2016 16:42
Nickel	**2100**	10	20	02/25/2016 16:42
Selenium	ND	10	20	02/25/2016 16:42
Silver	ND	3.8	20	02/25/2016 16:42
Thallium	ND	10	20	02/25/2016 16:42
Vanadium	**620**	10	20	02/25/2016 16:42
Zinc	**1100**	300	20	02/25/2016 16:42

Surrogates	REC (%)	Limits	
Terbium	105	70-130	02/25/2016 16:42

Analyst(s): AC

Analytical Comments: a1

McCampbell Analytical, Inc.
"When Quality Counts"

1534 Willow Pass Road, Pittsburg, CA 94565-1701
Toll Free Telephone: (877) 252-9262 / Fax: (925) 252-9269
http://www.mccampbell.com / E-mail: main@mccampbell.com

Analytical Report

Client:	AEW Engineering, Inc.	**WorkOrder:**	1602977
Date Received:	2/24/16 15:37	**Extraction Method:**	SM5220 D-1997
Date Prepared:	2/29/16	**Analytical Method:**	SM5220 D-1997
Project:	2015-29; Sausalito Gate 5 Characterization	**Unit:**	mg/L

Chemical Oxygen Demand (COD) as mg O2 /L

Client ID	Lab ID	Matrix	Date Collected	Instrument	Batch ID
AEW-B9 GW	**1602977-001H**	**Water**	**02/24/2016 08:50**	**SPECTROPHOTOMETER**	**117392**

Analytes	Result	RL	DF	Date Analyzed
COD	**460**	50	5	02/29/2016 17:35

Analyst(s): RB

Client ID	Lab ID	Matrix	Date Collected	Instrument	Batch ID
AEW-B2 GW	**1602977-002H**	**Water**	**02/24/2016 11:10**	**SPECTROPHOTOMETER**	**117392**

Analytes	Result	RL	DF	Date Analyzed
COD	**540**	50	5	02/29/2016 17:40

Analyst(s): RB

McCampbell Analytical, Inc.
"When Quality Counts"

1534 Willow Pass Road, Pittsburg, CA 94565-1701
Toll Free Telephone: (877) 252-9262 / Fax: (925) 252-9269
http://www.mccampbell.com / E-mail: main@mccampbell.com

Analytical Report

Client:	AEW Engineering, Inc.	**WorkOrder:**	1602977
Date Received:	2/24/16 15:37	**Extraction Method:**	SW5030B
Date Prepared:	2/27/16	**Analytical Method:**	SW8021B/8015Bm
Project:	2015-29; Sausalito Gate 5 Characterization	**Unit:**	µg/L

Gasoline Range (C6-C12) Volatile Hydrocarbons as Gasoline with BTEX and MTBE

Client ID	Lab ID	Matrix	Date Collected	Instrument	Batch ID
AEW-B9 GW	**1602977-001A**	**Water**	**02/24/2016 08:50**	**GC3**	**117339**

Analytes	Result	RL	DF	Date Analyzed
TPH(g)	ND	50	1	02/27/2016 01:36
MTBE	ND	5.0	1	02/27/2016 01:36
Benzene	ND	0.50	1	02/27/2016 01:36
Toluene	ND	0.50	1	02/27/2016 01:36
Ethylbenzene	ND	0.50	1	02/27/2016 01:36
Xylenes	ND	1.5	1	02/27/2016 01:36

Surrogates	REC (%)	Limits	
aaa-TFT	98	70-130	02/27/2016 01:36

Analyst(s): IA

Client ID	Lab ID	Matrix	Date Collected	Instrument	Batch ID
AEW-B2 GW	**1602977-002A**	**Water**	**02/24/2016 11:10**	**GC3**	**117339**

Analytes	Result	RL	DF	Date Analyzed
TPH(g)	ND	50	1	02/27/2016 14:34
MTBE	ND	5.0	1	02/27/2016 14:34
Benzene	ND	0.50	1	02/27/2016 14:34
Toluene	ND	0.50	1	02/27/2016 14:34
Ethylbenzene	ND	0.50	1	02/27/2016 14:34
Xylenes	ND	1.5	1	02/27/2016 14:34

Surrogates	REC (%)	Limits	
aaa-TFT	98	70-130	02/27/2016 14:34

Analyst(s): IA

McCampbell Analytical, Inc.
"When Quality Counts"

1534 Willow Pass Road, Pittsburg, CA 94565-1701
Toll Free Telephone: (877) 252-9262 / Fax: (925) 252-9269
http://www.mccampbell.com / E-mail: main@mccampbell.com

Analytical Report

Client:	AEW Engineering, Inc.	**WorkOrder:**	1602977
Date Received:	2/24/16 15:37	**Extraction Method:**	SW3510C/3630C
Date Prepared:	2/24/16	**Analytical Method:**	SW8015B
Project:	2015-29; Sausalito Gate 5 Characterization	**Unit:**	µg/L

Total Extractable Petroleum Hydrocarbons w/ SG Clean-Up

Client ID	Lab ID	Matrix	Date Collected	Instrument	Batch ID
AEW-B9 GW	**1602977-001B**	**Water**	**02/24/2016 08:50**	**GC9a**	**117115**

Analytes	Result	RL	DF	Date Analyzed
TPH-Diesel (C10-C23)	ND	50	1	02/24/2016 20:16
TPH-Motor Oil (C18-C36)	ND	250	1	02/24/2016 20:16

Surrogates	REC (%)	Limits	
C9	90	70-130	02/24/2016 20:16

Analyst(s): TK

Client ID	Lab ID	Matrix	Date Collected	Instrument	Batch ID
AEW-B2 GW	**1602977-002B**	**Water**	**02/24/2016 11:10**	**GC9b**	**117115**

Analytes	Result	RL	DF	Date Analyzed
TPH-Diesel (C10-C23)	**1500**	50	1	02/24/2016 20:16
TPH-Motor Oil (C18-C36)	**3800**	250	1	02/24/2016 20:16

Surrogates	REC (%)	Limits	
C9	96	70-130	02/24/2016 20:16

Analyst(s): TK Analytical Comments: e7,e2

McCampbell Analytical, Inc.
"When Quality Counts"

1534 Willow Pass Road, Pittsburg, CA 94565-1701
Toll Free Telephone: (877) 252-9262 / Fax: (925) 252-9269
http://www.mccampbell.com / E-mail: main@mccampbell.com

Analytical Report

Client:	AEW Engineering, Inc.	**WorkOrder:**	1602977
Date Received:	2/24/16 15:37	**Extraction Method:**	SM2540 D-1997
Date Prepared:	2/25/16	**Analytical Method:**	SM2540 D-1997
Project:	2015-29; Sausalito Gate 5 Characterization	**Unit:**	mg/L

Total Suspended Solids

Client ID	Lab ID	Matrix	Date Collected	Instrument	Batch ID
AEW-B9 GW	**1602977-001I**	**Water**	**02/24/2016 08:50**	**WetChem**	**117234**

Analytes	Result	RL	DF	Date Analyzed
Total Suspended Solids	**16,400**	100	100	02/25/2016 13:25

Analyst(s): AL

Client ID	Lab ID	Matrix	Date Collected	Instrument	Batch ID
AEW-B2 GW	**1602977-002I**	**Water**	**02/24/2016 11:10**	**WetChem**	**117234**

Analytes	Result	RL	DF	Date Analyzed
Total Suspended Solids	**15,900**	100	100	02/25/2016 13:30

Analyst(s): AL

McCampbell Analytical, Inc.
"When Quality Counts"

1534 Willow Pass Road, Pittsburg, CA 94565-1701
Toll Free Telephone: (877) 252-9262 / Fax: (925) 252-9269
http://www.mccampbell.com / E-mail: main@mccampbell.com

Quality Control Report

Client:	AEW Engineering, Inc.	**WorkOrder:**	1602977
Date Prepared:	2/24/16	**BatchID:**	117179
Date Analyzed:	2/25/16	**Extraction Method:**	E1664A_SG
Instrument:	O&G	**Analytical Method:**	E1664A
Matrix:	Water	**Unit:**	mg/L
Project:	2015-29; Sausalito Gate 5 Characterization	**Sample ID:**	MB/LCS/LCSD-117179

QC Summary Report for E1664A

Analyte	MB Result	RL
HEM	ND	5.0

Analyte	LCS Result	LCSD Result	SPK Val	SPKRef Val	LCS %REC	LCSD %REC	LCS/LCSD Limits	RPD	RPD Limit
HEM	19.8	18.7	20.83	ND	95	90	70-130	5.48	30

McCampbell Analytical, Inc.
"When Quality Counts"

1534 Willow Pass Road, Pittsburg, CA 94565-1701
Toll Free Telephone: (877) 252-9262 / Fax: (925) 252-9269
http://www.mccampbell.com / E-mail: main@mccampbell.com

Quality Control Report

Client:	AEW Engineering, Inc.	**WorkOrder:**	1602977
Date Prepared:	2/24/16	**BatchID:**	117175
Date Analyzed:	2/24/16	**Extraction Method:**	SW3510C
Instrument:	GC20	**Analytical Method:**	SW8081A/8082
Matrix:	Water	**Unit:**	µg/L
Project:	2015-29; Sausalito Gate 5 Characterization	**Sample ID:**	MB/LCS-117175

QC Summary Report for SW8081A/8082

Analyte	MB Result	LCS Result	RL	SPK Val	MB SS %REC	LCS %REC	LCS Limits
Aldrin	ND	1.07	0.0050	1.25	-	86	70-130
a-BHC	ND	-	0.010	-	-	-	-
b-BHC	ND	-	0.0050	-	-	-	-
d-BHC	ND	-	0.0050	-	-	-	-
g-BHC	ND	1.11	0.020	1.25	-	89	70-130
Chlordane (Technical)	ND	-	0.10	-	-	-	-
a-Chlordane	ND	-	0.050	-	-	-	-
g-Chlordane	ND	-	0.050	-	-	-	-
p,p-DDD	ND	-	0.010	-	-	-	-
p,p-DDE	ND	-	0.010	-	-	-	-
p,p-DDT	ND	1.20	0.010	1.25	-	96	70-130
Dieldrin	ND	1.29	0.010	1.25	-	103	70-130
Endosulfan I	ND	-	0.020	-	-	-	-
Endosulfan II	ND	-	0.020	-	-	-	-
Endosulfan sulfate	ND	-	0.050	-	-	-	-
Endrin	ND	1.13	0.010	1.25	-	90	70-130
Endrin aldehyde	ND	-	0.050	-	-	-	-
Endrin ketone	ND	-	0.050	-	-	-	-
Heptachlor	ND	0.988	0.010	1.25	-	79	70-130
Heptachlor epoxide	ND	-	0.010	-	-	-	-
Hexachlorobenzene	ND	-	0.50	-	-	-	-
Hexachlorocyclopentadiene	ND	-	1.0	-	-	-	-
Methoxychlor	ND	-	0.10	-	-	-	-
Toxaphene	ND	-	0.50	-	-	-	-
Aroclor1016	ND	-	0.50	-	-	-	-
Aroclor1221	ND	-	0.50	-	-	-	-
Aroclor1232	ND	-	0.50	-	-	-	-
Aroclor1242	ND	-	0.50	-	-	-	-
Aroclor1248	ND	-	0.50	-	-	-	-
Aroclor1254	ND	-	0.50	-	-	-	-
Aroclor1260	ND	-	0.50	-	-	-	-
PCBs, total	ND	-	0.50	-	-	-	-
Surrogate Recovery							
Decachlorobiphenyl	1.28	1.29		1.25	102	103	70-130

McCampbell Analytical, Inc.
"When Quality Counts"

1534 Willow Pass Road, Pittsburg, CA 94565-1701
Toll Free Telephone: (877) 252-9262 / Fax: (925) 252-9269
http://www.mccampbell.com / E-mail: main@mccampbell.com

Quality Control Report

Client:	AEW Engineering, Inc.	**WorkOrder:**	1602977
Date Prepared:	2/26/16	**BatchID:**	117278
Date Analyzed:	2/26/16	**Extraction Method:**	SW5030B
Instrument:	GC28	**Analytical Method:**	SW8260B
Matrix:	Water	**Unit:**	µg/L
Project:	2015-29; Sausalito Gate 5 Characterization	**Sample ID:**	MB/LCS-117278 1602806-007AMS/MSD

QC Summary Report for SW8260B

Analyte	MB Result	LCS Result	RL	SPK Val	MB SS %REC	LCS %REC	LCS Limits
Acetone	ND	-	10	-	-	-	-
tert-Amyl methyl ether (TAME)	ND	8.61	0.50	10	-	86	54-140
Benzene	ND	9.56	0.50	10	-	96	47-158
Bromobenzene	ND	-	0.50	-	-	-	-
Bromochloromethane	ND	-	0.50	-	-	-	-
Bromodichloromethane	ND	-	0.50	-	-	-	-
Bromoform	ND	-	0.50	-	-	-	-
Bromomethane	ND	-	0.50	-	-	-	-
2-Butanone (MEK)	ND	-	2.0	-	-	-	-
t-Butyl alcohol (TBA)	ND	40.8	2.0	40	-	102	42-140
n-Butyl benzene	ND	-	0.50	-	-	-	-
sec-Butyl benzene	ND	-	0.50	-	-	-	-
tert-Butyl benzene	ND	-	0.50	-	-	-	-
Carbon Disulfide	ND	-	0.50	-	-	-	-
Carbon Tetrachloride	ND	-	0.50	-	-	-	-
Chlorobenzene	ND	9.01	0.50	10	-	90	43-157
Chloroethane	ND	-	0.50	-	-	-	-
Chloroform	ND	-	0.50	-	-	-	-
Chloromethane	ND	-	0.50	-	-	-	-
2-Chlorotoluene	ND	-	0.50	-	-	-	-
4-Chlorotoluene	ND	-	0.50	-	-	-	-
Dibromochloromethane	ND	-	0.50	-	-	-	-
1,2-Dibromo-3-chloropropane	ND	-	0.20	-	-	-	-
1,2-Dibromoethane (EDB)	ND	10.1	0.50	10	-	101	44-155
Dibromomethane	ND	-	0.50	-	-	-	-
1,2-Dichlorobenzene	ND	-	0.50	-	-	-	-
1,3-Dichlorobenzene	ND	-	0.50	-	-	-	-
1,4-Dichlorobenzene	ND	-	0.50	-	-	-	-
Dichlorodifluoromethane	ND	-	0.50	-	-	-	-
1,1-Dichloroethane	ND	-	0.50	-	-	-	-
1,2-Dichloroethane (1,2-DCA)	ND	9.99	0.50	10	-	100	66-125
1,1-Dichloroethene	ND	10.5	0.50	10	-	105	47-149
cis-1,2-Dichloroethene	ND	-	0.50	-	-	-	-
trans-1,2-Dichloroethene	ND	-	0.50	-	-	-	-
1,2-Dichloropropane	ND	-	0.50	-	-	-	-
1,3-Dichloropropane	ND	-	0.50	-	-	-	-
2,2-Dichloropropane	ND	-	0.50	-	-	-	-

(Cont.)

McCampbell Analytical, Inc.
"When Quality Counts"

1534 Willow Pass Road, Pittsburg, CA 94565-1701
Toll Free Telephone: (877) 252-9262 / Fax: (925) 252-9269
http://www.mccampbell.com / E-mail: main@mccampbell.com

Quality Control Report

Client:	AEW Engineering, Inc.	**WorkOrder:**	1602977
Date Prepared:	2/26/16	**BatchID:**	117278
Date Analyzed:	2/26/16	**Extraction Method:**	SW5030B
Instrument:	GC28	**Analytical Method:**	SW8260B
Matrix:	Water	**Unit:**	µg/L
Project:	2015-29; Sausalito Gate 5 Characterization	**Sample ID:**	MB/LCS-117278 1602806-007AMS/MSD

QC Summary Report for SW8260B

Analyte	MB Result	LCS Result	RL	SPK Val	MB SS %REC	LCS %REC	LCS Limits
1,1-Dichloropropene	ND	-	0.50	-	-	-	-
cis-1,3-Dichloropropene	ND	-	0.50	-	-	-	-
trans-1,3-Dichloropropene	ND	-	0.50	-	-	-	-
Diisopropyl ether (DIPE)	ND	9.91	0.50	10	-	99	57-136
Ethylbenzene	ND	-	0.50	-	-	-	-
Ethyl tert-butyl ether (ETBE)	ND	9.71	0.50	10	-	97	55-137
Freon 113	ND	-	0.50	-	-	-	-
Hexachlorobutadiene	ND	-	0.50	-	-	-	-
Hexachloroethane	ND	-	0.50	-	-	-	-
2-Hexanone	ND	-	0.50	-	-	-	-
Isopropylbenzene	ND	-	0.50	-	-	-	-
4-Isopropyl toluene	ND	-	0.50	-	-	-	-
Methyl-t-butyl ether (MTBE)	ND	10.5	0.50	10	-	105	53-139
Methylene chloride	ND	-	0.50	-	-	-	-
4-Methyl-2-pentanone (MIBK)	ND	-	0.50	-	-	-	-
Naphthalene	ND	-	0.50	-	-	-	-
n-Propyl benzene	ND	-	0.50	-	-	-	-
Styrene	ND	-	0.50	-	-	-	-
1,1,1,2-Tetrachloroethane	ND	-	0.50	-	-	-	-
1,1,2,2-Tetrachloroethane	ND	-	0.50	-	-	-	-
Tetrachloroethene	ND	-	0.50	-	-	-	-
Toluene	ND	9.08	0.50	10	-	91	52-137
1,2,3-Trichlorobenzene	ND	-	0.50	-	-	-	-
1,2,4-Trichlorobenzene	ND	-	0.50	-	-	-	-
1,1,1-Trichloroethane	ND	-	0.50	-	-	-	-
1,1,2-Trichloroethane	ND	-	0.50	-	-	-	-
Trichloroethene	ND	10.0	0.50	10	-	100	43-157
Trichlorofluoromethane	ND	-	0.50	-	-	-	-
1,2,3-Trichloropropane	ND	-	0.50	-	-	-	-
1,2,4-Trimethylbenzene	ND	-	0.50	-	-	-	-
1,3,5-Trimethylbenzene	ND	-	0.50	-	-	-	-
Vinyl Chloride	ND	-	0.50	-	-	-	-
Xylenes, Total	ND	-	0.50	-	-	-	-

(Cont.)

McCampbell Analytical, Inc.
"When Quality Counts"

1534 Willow Pass Road, Pittsburg, CA 94565-1701
Toll Free Telephone: (877) 252-9262 / Fax: (925) 252-9269
http://www.mccampbell.com / E-mail: main@mccampbell.com

Quality Control Report

Client:	AEW Engineering, Inc.	**WorkOrder:**	1602977
Date Prepared:	2/26/16	**BatchID:**	117278
Date Analyzed:	2/26/16	**Extraction Method:**	SW5030B
Instrument:	GC28	**Analytical Method:**	SW8260B
Matrix:	Water	**Unit:**	µg/L
Project:	2015-29; Sausalito Gate 5 Characterization	**Sample ID:**	MB/LCS-117278 1602806-007AMS/MSD

QC Summary Report for SW8260B

Analyte	MB Result	LCS Result	RL	SPK Val	MB SS %REC	LCS %REC	LCS Limits
Surrogate Recovery							
Dibromofluoromethane	29.5	29.7		25	118	119	70-130
Toluene-d8	28.7	27.9		25	115	112	70-130
4-BFB	1.94	2.27		2.5	78	91	70-130

Analyte	MS Result	MSD Result	SPK Val	SPKRef Val	MS %REC	MSD %REC	MS/MSD Limits	RPD	RPD Limit
tert-Amyl methyl ether (TAME)	8.52	9.00	10	ND	85	90	69-139	5.48	20
Benzene	9.40	9.77	10	ND	94	98	69-141	3.88	20
t-Butyl alcohol (TBA)	44.9	44.2	40	ND	112	111	41-152	1.54	20
Chlorobenzene	8.83	8.98	10	ND	88	90	77-120	1.69	20
1,2-Dibromoethane (EDB)	9.80	10.1	10	ND	98	101	76-135	3.19	20
1,2-Dichloroethane (1,2-DCA)	9.86	10.0	10	ND	99	100	73-139	1.76	20
1,1-Dichloroethene	11.2	11.5	10	ND	112	115	59-140	2.53	20
Diisopropyl ether (DIPE)	9.76	10.3	10	ND	98	103	72-140	5.63	20
Ethyl tert-butyl ether (ETBE)	9.73	10.1	10	ND	97	101	71-140	3.59	20
Methyl-t-butyl ether (MTBE)	11.1	11.6	10	ND	111	116	73-139	3.99	20
Toluene	8.86	9.21	10	ND	89	92	71-128	3.88	20
Trichloroethene	9.19	9.72	10	ND	92	97	64-132	5.60	20
Surrogate Recovery									
Dibromofluoromethane	29.3	29.8	25		117	119	73-131	1.39	20
Toluene-d8	28.5	28.3	25		114	113	72-117	0.632	20
4-BFB	2.26	2.28	2.5		90	91	74-116	1.05	20

McCampbell Analytical, Inc.
"When Quality Counts"

1534 Willow Pass Road, Pittsburg, CA 94565-1701
Toll Free Telephone: (877) 252-9262 / Fax: (925) 252-9269
http://www.mccampbell.com / E-mail: main@mccampbell.com

Quality Control Report

Client:	AEW Engineering, Inc.	**WorkOrder:**	1602977
Date Prepared:	2/24/16	**BatchID:**	117208
Date Analyzed:	2/26/16	**Extraction Method:**	SW3510C / SW3640A
Instrument:	GC17	**Analytical Method:**	SW8270C
Matrix:	Water	**Unit:**	µg/L
Project:	2015-29; Sausalito Gate 5 Characterization	**Sample ID:**	MB/LCS-117208

QC Summary Report for SW8270C

Analyte	MB Result	LCS Result	RL	SPK Val	MB SS %REC	LCS %REC	LCS Limits
Acenaphthene	ND	14.9	2.0	20	-	74	47-120
Acenaphthylene	ND	-	2.0	-	-	-	-
Acetochlor	ND	-	2.0	-	-	-	-
Anthracene	ND	-	2.0	-	-	-	-
Benzidine	ND	-	10	-	-	-	-
Benzo (a) anthracene	ND	-	2.0	-	-	-	-
Benzo (a) pyrene	ND	-	2.0	-	-	-	-
Benzo (b) fluoranthene	ND	-	2.0	-	-	-	-
Benzo (g,h,i) perylene	ND	-	2.0	-	-	-	-
Benzo (k) fluoranthene	ND	-	2.0	-	-	-	-
Benzyl Alcohol	ND	-	10	-	-	-	-
1,1-Biphenyl	ND	-	2.0	-	-	-	-
Bis (2-chloroethoxy) Methane	ND	-	2.0	-	-	-	-
Bis (2-chloroethyl) Ether	ND	-	2.0	-	-	-	-
Bis (2-chloroisopropyl) Ether	ND	-	2.0	-	-	-	-
Bis (2-ethylhexyl) Adipate	ND	-	2.0	-	-	-	-
Bis (2-ethylhexyl) Phthalate	ND	-	4.0	-	-	-	-
4-Bromophenyl Phenyl Ether	ND	-	10	-	-	-	-
Butylbenzyl Phthalate	ND	-	2.0	-	-	-	-
4-Chloroaniline	ND	-	4.0	-	-	-	-
4-Chloro-3-methylphenol	ND	17.5	10	20	-	88	47-120
1-Chloronaphthalene	ND	-	10	-	-	-	-
2-Chloronaphthalene	ND	-	2.0	-	-	-	-
2-Chlorophenol	ND	15.3	2.0	20	-	77	37-120
4-Chlorophenyl Phenyl Ether	ND	-	2.0	-	-	-	-
Chrysene	ND	-	2.0	-	-	-	-
Dibenzo (a,h) anthracene	ND	-	2.0	-	-	-	-
Dibenzofuran	ND	-	2.0	-	-	-	-
Di-n-butyl Phthalate	ND	-	2.0	-	-	-	-
1,2-Dichlorobenzene	ND	-	2.0	-	-	-	-
1,3-Dichlorobenzene	ND	-	2.0	-	-	-	-
1,4-Dichlorobenzene	ND	14.1	2.0	20	-	71	32-120
3,3-Dichlorobenzidine	ND	-	4.0	-	-	-	-
2,4-Dichlorophenol	ND	-	2.0	-	-	-	-
Diethyl Phthalate	ND	-	2.0	-	-	-	-
2,4-Dimethylphenol	ND	-	2.0	-	-	-	-
Dimethyl Phthalate	ND	-	2.0	-	-	-	-

(Cont.)

McCampbell Analytical, Inc.
"When Quality Counts"

1534 Willow Pass Road, Pittsburg, CA 94565-1701
Toll Free Telephone: (877) 252-9262 / Fax: (925) 252-9269
http://www.mccampbell.com / E-mail: main@mccampbell.com

Quality Control Report

Client:	AEW Engineering, Inc.	**WorkOrder:**	1602977
Date Prepared:	2/24/16	**BatchID:**	117208
Date Analyzed:	2/26/16	**Extraction Method:**	SW3510C / SW3640A
Instrument:	GC17	**Analytical Method:**	SW8270C
Matrix:	Water	**Unit:**	µg/L
Project:	2015-29; Sausalito Gate 5 Characterization	**Sample ID:**	MB/LCS-117208

QC Summary Report for SW8270C

Analyte	MB Result	LCS Result	RL	SPK Val	MB SS %REC	LCS %REC	LCS Limits
4,6-Dinitro-2-methylphenol	ND	-	10	-	-	-	-
2,4-Dinitrophenol	ND	-	25	-	-	-	-
2,4-Dinitrotoluene	ND	16.0	2.0	20	-	80	51-120
2,6-Dinitrotoluene	ND	-	2.0	-	-	-	-
Di-n-octyl Phthalate	ND	-	2.0	-	-	-	-
1,2-Diphenylhydrazine	ND	-	2.0	-	-	-	-
Fluoranthene	ND	-	2.0	-	-	-	-
Fluorene	ND	-	2.0	-	-	-	-
Hexachlorobenzene	ND	-	2.0	-	-	-	-
Hexachlorobutadiene	ND	-	2.0	-	-	-	-
Hexachlorocyclopentadiene	ND	-	10	-	-	-	-
Hexachloroethane	ND	-	2.0	-	-	-	-
Indeno (1,2,3-cd) pyrene	ND	-	2.0	-	-	-	-
Isophorone	ND	-	2.0	-	-	-	-
2-Methylnaphthalene	ND	-	2.0	-	-	-	-
2-Methylphenol (o-Cresol)	ND	-	2.0	-	-	-	-
3 & 4-Methylphenol (m,p-Cresol)	ND	-	2.0	-	-	-	-
Naphthalene	ND	-	2.0	-	-	-	-
2-Nitroaniline	ND	-	10	-	-	-	-
3-Nitroaniline	ND	-	10	-	-	-	-
4-Nitroaniline	ND	-	10	-	-	-	-
Nitrobenzene	ND	-	2.0	-	-	-	-
2-Nitrophenol	ND	-	10	-	-	-	-
4-Nitrophenol	ND	97.2	10	100	-	97	20-120
N-Nitrosodiphenylamine	ND	-	2.0	-	-	-	-
N-Nitrosodi-n-propylamine	ND	15.5	2.0	20	-	77	34-128
Pentachlorophenol	ND	43.0	10	40	-	108	38-120
Phenanthrene	ND	-	2.0	-	-	-	-
Phenol	ND	16.1	2.0	20	-	81	20-120
Pyrene	ND	17.7	2.0	20	-	88	49-128
Pyridine	ND	-	2.0	-	-	-	-
1,2,4-Trichlorobenzene	ND	14.7	2.0	20	-	74	37-120
2,4,5-Trichlorophenol	ND	-	2.0	-	-	-	-
2,4,6-Trichlorophenol	ND	-	2.0	-	-	-	-

(Cont.)

McCampbell Analytical, Inc.
"When Quality Counts"

1534 Willow Pass Road, Pittsburg, CA 94565-1701
Toll Free Telephone: (877) 252-9262 / Fax: (925) 252-9269
http://www.mccampbell.com / E-mail: main@mccampbell.com

Quality Control Report

Client:	AEW Engineering, Inc.	**WorkOrder:**	1602977
Date Prepared:	2/24/16	**BatchID:**	117208
Date Analyzed:	2/26/16	**Extraction Method:**	SW3510C / SW3640A
Instrument:	GC17	**Analytical Method:**	SW8270C
Matrix:	Water	**Unit:**	µg/L
Project:	2015-29; Sausalito Gate 5 Characterization	**Sample ID:**	MB/LCS-117208

QC Summary Report for SW8270C

Analyte	MB Result	LCS Result	RL	SPK Val	MB SS %REC	LCS %REC	LCS Limits
Surrogate Recovery							
2-Fluorophenol	18.4	16.1		20	92	81	8-180
Phenol-d5	19.6	19.1		20	98	96	5-100
Nitrobenzene-d5	18.5	18.6		20	93	93	20-140
2-Fluorobiphenyl	17.5	17.6		20	87	88	35-140
2,4,6-Tribromophenol	28.4	25.8		20	142	129	16-180
4-Terphenyl-d14	19.1	21.7		20	96	108	40-170

McCampbell Analytical, Inc.
"When Quality Counts"

1534 Willow Pass Road, Pittsburg, CA 94565-1701
Toll Free Telephone: (877) 252-9262 / Fax: (925) 252-9269
http://www.mccampbell.com / E-mail: main@mccampbell.com

Quality Control Report

Client:	AEW Engineering, Inc.	**WorkOrder:**	1602977
Date Prepared:	2/23/16	**BatchID:**	117114
Date Analyzed:	2/23/16	**Extraction Method:**	E200.8
Instrument:	ICP-MS1	**Analytical Method:**	E200.8
Matrix:	Water	**Unit:**	µg/L
Project:	2015-29; Sausalito Gate 5 Characterization	**Sample ID:**	MB/LCS-117114 1602922-002BMS/MSD

QC Summary Report for Dissolved Metals

Analyte	MB Result	LCS Result	RL	SPK Val	MB SS %REC	LCS %REC	LCS Limits
Antimony	ND	48.9	0.50	50	-	98	85-115
Arsenic	ND	50.8	0.50	50	-	102	85-115
Barium	ND	519	5.0	500	-	104	85-115
Beryllium	ND	49.6	0.50	50	-	99	85-115
Cadmium	ND	51.3	0.25	50	-	103	85-115
Chromium	ND	53.0	0.50	50	-	106	85-115
Cobalt	ND	52.4	0.50	50	-	105	85-115
Copper	ND	53.7	2.0	50	-	107	85-115
Lead	ND	50.5	0.50	50	-	101	85-115
Mercury	ND	1.28	0.025	1.25	-	102	85-115
Molybdenum	ND	49.9	0.50	50	-	100	85-115
Nickel	ND	53.5	0.50	50	-	107	85-115
Selenium	ND	52.1	0.50	50	-	104	85-115
Silver	ND	49.6	0.19	50	-	99	85-115
Thallium	ND	48.3	0.50	50	-	97	85-115
Vanadium	ND	52.2	0.50	50	-	104	85-115
Zinc	ND	520	15	500	-	104	85-115

(Cont.)

McCampbell Analytical, Inc.
"When Quality Counts"

1534 Willow Pass Road, Pittsburg, CA 94565-1701
Toll Free Telephone: (877) 252-9262 / Fax: (925) 252-9269
http://www.mccampbell.com / E-mail: main@mccampbell.com

Quality Control Report

Client:	AEW Engineering, Inc.	**WorkOrder:**	1602977
Date Prepared:	2/23/16	**BatchID:**	117114
Date Analyzed:	2/23/16	**Extraction Method:**	E200.8
Instrument:	ICP-MS1	**Analytical Method:**	E200.8
Matrix:	Water	**Unit:**	µg/L
Project:	2015-29; Sausalito Gate 5 Characterization	**Sample ID:**	MB/LCS-117114 1602922-002BMS/MSD

QC Summary Report for Dissolved Metals

Analyte	MS Result	MSD Result	SPK Val	SPKRef Val	MS %REC	MSD %REC	MS/MSD Limits	RPD	RPD Limit
Antimony	53.2	48.4	50	ND	106	96	70-130	9.65	20
Arsenic	56.3	50.9	50	0.83	111	100	70-130	10.1	20
Barium	642	590	500	77	113	102	70-130	8.40	20
Beryllium	52.0	47.5	50	ND	104	95	70-130	9.04	20
Cadmium	52.6	48.2	50	ND	105	96	70-130	8.61	20
Chromium	53.9	49.6	50	0.51	107	98	70-130	8.26	20
Cobalt	51.9	46.4	50	0.67	103	91	70-130	11.3	20
Copper	53.8	49.7	50	2.1	103	95	70-130	7.98	20
Lead	53.2	48.8	50	ND	106	97	70-130	8.59	20
Mercury	1.40	1.34	1.25	0.045	108	103	70-130	4.53	20
Molybdenum	53.9	49.2	50	0.74	106	97	70-130	9.15	20
Nickel	59.7	56.0	50	7.368	105	97	70-130	6.36	20
Selenium	53.6	52.5	50	ND	107	104	70-130	2.13	20
Silver	50.2	45.3	50	ND	100	91	70-130	10.2	20
Thallium	52.0	47.6	50	ND	104	95	70-130	8.84	20
Vanadium	56.2	51.9	50	1.8	109	100	70-130	7.97	20
Zinc	546	500	500	18	106	97	70-130	8.81	20

McCampbell Analytical, Inc.
"When Quality Counts"

1534 Willow Pass Road, Pittsburg, CA 94565-1701
Toll Free Telephone: (877) 252-9262 / Fax: (925) 252-9269
http://www.mccampbell.com / E-mail: main@mccampbell.com

Quality Control Report

Client:	AEW Engineering, Inc.	**WorkOrder:**	1602977
Date Prepared:	2/24/16	**BatchID:**	117152
Date Analyzed:	2/25/16	**Extraction Method:**	E200.8
Instrument:	ICP-MS2	**Analytical Method:**	E200.8
Matrix:	Water	**Unit:**	µg/L
Project:	2015-29; Sausalito Gate 5 Characterization	**Sample ID:**	MB/LCS-117152 1602972-001FMS/MSD

QC Summary Report for Metals

Analyte	MB Result	LCS Result	RL	SPK Val	MB SS %REC	LCS %REC	LCS Limits
Antimony	ND	48.9	0.50	50	-	98	85-115
Arsenic	ND	49.2	0.50	50	-	98	85-115
Barium	ND	503	5.0	500	-	101	85-115
Beryllium	ND	49.4	0.50	50	-	99	85-115
Cadmium	ND	50.3	0.25	50	-	101	85-115
Chromium	ND	51.7	0.50	50	-	103	85-115
Cobalt	ND	48.3	0.50	50	-	97	85-115
Copper	ND	51.4	2.0	50	-	103	85-115
Lead	ND	47.1	0.50	50	-	94	85-115
Mercury	ND	1.20	0.025	1.25	-	96	85-115
Molybdenum	ND	46.3	0.50	50	-	93	85-115
Nickel	ND	51.2	0.50	50	-	102	85-115
Selenium	ND	48.3	0.50	50	-	97	85-115
Silver	ND	48.0	0.19	50	-	96	85-115
Thallium	ND	46.0	0.50	50	-	92	85-115
Vanadium	ND	50.3	0.50	50	-	101	85-115
Zinc	ND	504	15	500	-	101	85-115
Surrogate Recovery							
Terbium	739	716		750	99	96	70-130

(Cont.)

McCampbell Analytical, Inc.
"When Quality Counts"

1534 Willow Pass Road, Pittsburg, CA 94565-1701
Toll Free Telephone: (877) 252-9262 / Fax: (925) 252-9269
http://www.mccampbell.com / E-mail: main@mccampbell.com

Quality Control Report

Client:	AEW Engineering, Inc.	**WorkOrder:**	1602977
Date Prepared:	2/24/16	**BatchID:**	117152
Date Analyzed:	2/25/16	**Extraction Method:**	E200.8
Instrument:	ICP-MS2	**Analytical Method:**	E200.8
Matrix:	Water	**Unit:**	µg/L
Project:	2015-29; Sausalito Gate 5 Characterization	**Sample ID:**	MB/LCS-117152 1602972-001FMS/MSD

QC Summary Report for Metals

Analyte	MS Result	MSD Result	SPK Val	SPKRef Val	MS %REC	MSD %REC	MS/MSD Limits	RPD	RPD Limit
Antimony	50.4	51.1	50	0.64	100	101	70-130	1.22	20
Arsenic	50.3	51.8	50	3.037	94	98	70-130	3.00	20
Barium	686	690	500	170	102	103	70-130	0.698	20
Beryllium	49.1	50.1	50	ND	98	100	70-130	2.08	20
Cadmium	44.9	45.7	50	ND	89	91	70-130	1.94	20
Chromium	49.1	50.3	50	6.216	86	88	70-130	2.27	20
Cobalt	44.2	43.8	50	0.98	86	86	70-130	0	20
Copper	138	142	50	100.7	74	83	70-130	3.14	20
Lead	66.5	67.0	50	18.09	97	98	70-130	0.704	20
Mercury	1.35	1.41	1.25	0.066	103	108	70-130	4.34	20
Molybdenum	52.5	53.1	50	4.1	97	98	70-130	1.17	20
Nickel	44.4	45.4	50	2.456	84	86	70-130	2.32	20
Selenium	48.5	49.7	50	0.5262	96	98	70-130	2.40	20
Silver	43.3	43.4	50	ND	87	87	70-130	0	20
Thallium	47.2	47.7	50	ND	94	95	70-130	1.16	20
Vanadium	47.1	47.9	50	1.4	91	93	70-130	1.73	20
Zinc	673	697	500	250.7	84	89	70-130	3.58	20
Surrogate Recovery									
Terbium	728	732	750		97	98	70-130	0.466	20

McCampbell Analytical, Inc.
"When Quality Counts"

1534 Willow Pass Road, Pittsburg, CA 94565-1701
Toll Free Telephone: (877) 252-9262 / Fax: (925) 252-9269
http://www.mccampbell.com / E-mail: main@mccampbell.com

Quality Control Report

Client:	AEW Engineering, Inc.	**WorkOrder:**	1602977
Date Prepared:	2/29/16	**BatchID:**	117392
Date Analyzed:	2/29/16	**Extraction Method:**	SM5220 D-1997
Instrument:	SPECTROPHOTOMETER	**Analytical Method:**	SM5220 D-1997
Matrix:	Water	**Unit:**	mg/L
Project:	2015-29; Sausalito Gate 5 Characterization	**Sample ID:**	MB/LCS-117392 1602958-001BMS/MSD

QC Summary Report for COD

Analyte	MB Result	LCS Result	RL	SPK Val	MB SS %REC	LCS %REC	LCS Limits
COD	ND	394	10	400	-	98	90-110

Analyte	MS Result	MSD Result	SPK Val	SPKRef Val	MS %REC	MSD %REC	MS/MSD Limits	RPD	RPD Limit
COD	413	416	400	17.22	99	100	80-120	0.593	20

McCampbell Analytical, Inc.
"When Quality Counts"

1534 Willow Pass Road, Pittsburg, CA 94565-1701
Toll Free Telephone: (877) 252-9262 / Fax: (925) 252-9269
http://www.mccampbell.com / E-mail: main@mccampbell.com

Quality Control Report

Client:	AEW Engineering, Inc.	**WorkOrder:**	1602977
Date Prepared:	2/26/16	**BatchID:**	117339
Date Analyzed:	2/26/16	**Extraction Method:**	SW5030B
Instrument:	GC3	**Analytical Method:**	SW8021B/8015Bm
Matrix:	Water	**Unit:**	µg/L
Project:	2015-29; Sausalito Gate 5 Characterization	**Sample ID:**	MB/LCS-117339 1602937-001BMS/MSD

QC Summary Report for SW8021B/8015Bm

Analyte	MB Result	LCS Result	RL	SPK Val	MB SS %REC	LCS %REC	LCS Limits
TPH(btex)	ND	56.5	40	60	-	94	70-130
MTBE	ND	8.64	5.0	10	-	86	70-130
Benzene	ND	8.86	0.50	10	-	89	70-130
Toluene	ND	8.97	0.50	10	-	90	70-130
Ethylbenzene	ND	9.15	0.50	10	-	91	70-130
Xylenes	ND	27.7	1.5	30	-	92	70-130
Surrogate Recovery							
aaa-TFT	9.73	9.68		10	97	97	70-130

Analyte	MS Result	MSD Result	SPK Val	SPKRef Val	MS %REC	MSD %REC	MS/MSD Limits	RPD	RPD Limit
TPH(btex)	57.0	59.1	60	ND	95	99	70-130	0	20
MTBE	8.82	9.48	10	ND	88	95	70-130	0	20
Benzene	9.79	9.72	10	ND	98	97	70-130	0	20
Toluene	10.1	10.1	10	ND	101	101	70-130	0	20
Ethylbenzene	10.1	10.2	10	ND	101	101	70-130	0	20
Xylenes	30.3	30.7	30	ND	101	102	70-130	0	20
Surrogate Recovery									
aaa-TFT	10.2	10.1	10		102	101	70-130	0	20

McCampbell Analytical, Inc.
"When Quality Counts"

1534 Willow Pass Road, Pittsburg, CA 94565-1701
Toll Free Telephone: (877) 252-9262 / Fax: (925) 252-9269
http://www.mccampbell.com / E-mail: main@mccampbell.com

Quality Control Report

Client:	AEW Engineering, Inc.	**WorkOrder:**	1602977
Date Prepared:	2/23/16	**BatchID:**	117115
Date Analyzed:	2/24/16	**Extraction Method:**	SW3510C/3630C
Instrument:	GC39B	**Analytical Method:**	SW8015B
Matrix:	Water	**Unit:**	µg/L
Project:	2015-29; Sausalito Gate 5 Characterization	**Sample ID:**	MB/LCS-117115

QC Report for SW8015B w/ SG Clean-Up

Analyte	MB Result	LCS Result	RL	SPK Val	MB SS %REC	LCS %REC	LCS Limits
TPH-Diesel (C10-C23)	ND	1140	50	1000	-	114	59-151
TPH-Motor Oil (C18-C36)	ND	-	250	-	-	-	-
Surrogate Recovery							
C9	668	659		625	107	105	65-122

McCampbell Analytical, Inc.
"When Quality Counts"

1534 Willow Pass Road, Pittsburg, CA 94565-1701
Toll Free Telephone: (877) 252-9262 / Fax: (925) 252-9269
http://www.mccampbell.com / E-mail: main@mccampbell.com

Quality Control Report

Client:	AEW Engineering, Inc.	**WorkOrder:**	1602977
Date Prepared:	2/25/16	**BatchID:**	117234
Date Analyzed:	2/25/16	**Extraction Method:**	SM2540 D-1997
Instrument:	WetChem	**Analytical Method:**	SM2540 D-1997
Matrix:	Water	**Unit:**	mg/L
Project:	2015-29; Sausalito Gate 5 Characterization		

QC Summary Report for Total Suspended Solids

SampID	Sample Result	Sample DF	Dup / Serial Dilution Result	Dup / Serial Dilution DF	RPD	Acceptance Criteria (%)
1602958-001J	ND	1	ND<2.00	2	N/A	<15

McCampbell Analytical, Inc.
1534 Willow Pass Rd
Pittsburg, CA 94565-1701
(925) 252-9262

CHAIN-OF-CUSTODY RECORD

WorkOrder: 1602977 **ClientCode: AEW**

☐ WaterTrax ☐ WriteOn ☐ EDF ☑ Excel ☐ EQuIS ☑ Email ☑ HardCopy ☐ ThirdParty ☐ J-flag

Report to:
Ryder Musselman
AEW Engineering, Inc.
55 New Montgomery St, Ste 722
San Francisco, CA 94105
(415) 495-8401 FAX: (415) 358-5598

Email: rmusselman@aewengineering.com
cc/3rd Party: ryoung@aewengineering.com;
PO:
ProjectNo: 2015-29; Sausalito Gate 5 Characterization

Bill to:
Kenneth Leung
AEW Engineering, Inc.
55 New Montgomery St, Ste 507
San Francisco, CA 94105
kleung@aewengineering.com; byeung

Requested TAT: 5 days;

Date Received: 02/24/2016
Date Logged: 02/24/2016

Lab ID	Client ID	Matrix	Collection Date	Hold	Requested Tests (See legend below) 1	2	3	4	5	6	7	8	9	10	11	12
1602977-001	AEW-B9 GW	Water	2/24/2016 8:50	☐	G	E	C	D	D	J	F	H	A	J	B	I
1602977-002	AEW-B2 GW	Water	2/24/2016 11:10	☐	G	E	C	D	D	J	F	H	A	J	B	I

Test Legend:

1	1664A_SG_W	2	8081PCB_W	3	8260B_W	4	8270_ESL_W
5	8270_GPC_W	6	CAM17MS_DISS	7	CAM17MS_TTLC_W	8	COD_W
9	G-MBTEX_W	10	PRDISSOLVED	11	TPH(DMO)WSG_W	12	TSS_W

Prepared by: Briana Cutino

Comments: Hold all soil samples for 6mos per Ken Leung 3/14/14

NOTE: Soil samples are discarded 60 days after results are reported unless other arrangements are made (Water samples are 30 days).
Hazardous samples will be returned to client or disposed of at client expense.

McCampbell Analytical, Inc.
"When Quality Counts"

1534 Willow Pass Road, Pittsburg, CA 94565-1701
Toll Free Telephone: (877) 252-9262 / Fax: (925) 252-9269
http://www.mccampbell.com / E-mail: main@mccampbell.com

WORK ORDER SUMMARY

Client Name: AEW ENGINEERING, INC.
QC Level: LEVEL 2
Work Order: 1602977
Project: 2015-29; Sausalito Gate 5 Characterization
Client Contact: Ryder Musselman
Date Logged: 2/24/2016
Comments: Hold all soil samples for 6mos per Ken Leung 3/14/14
Contact's Email: rmusselman@aewengineering.com

☐ WaterTrax ☐ WriteOn ☐ EDF ☑ Excel ☐ Fax ☑ Email ☑ HardCopy ☐ ThirdParty ☐ J-flag

Lab ID	Client ID	Matrix	Test Name	Containers /Composites	Bottle & Preservative	De-chlorinated	Collection Date & Time	TAT	Sediment Content	Hold	SubOut
1602977-001A	AEW-B9 GW	Water	SW8021B/8015Bm (G/MBTEX)	2	VOA w/ HCl	☐	2/24/2016 8:50	5 days	Present	☐	
1602977-001B	AEW-B9 GW	Water	SW8015B (TPH-d,mo w/ S.G. Clean-Up)	2	aVOA	☐	2/24/2016 8:50	5 days	Present	☐	
1602977-001C	AEW-B9 GW	Water	SW8260B (VOCs)	2	VOA w/ HCl	☐	2/24/2016 8:50	5 days	Present	☐	
1602977-001D	AEW-B9 GW	Water	SW8270C (SVOCs w/ GPC)	1	1LA	☐	2/24/2016 8:50	5 days	Present	☐	
			SW8270C (SVOCs)			☐		5 days	Present	☑	
1602977-001E	AEW-B9 GW	Water	SW8081A/8082 (OC Pesticides+PCBs)	2	aVOA	☐	2/24/2016 8:50	5 days	Present	☐	
1602977-001F	AEW-B9 GW	Water	E200.8 (CAM 17)	1	250mL HDPE w/ HNO3	☐	2/24/2016 8:50	5 days	Present	☐	
1602977-001G	AEW-B9 GW	Water	E1664A (SGT- HEM; Non-polar Material)	1	1LA w/ HCl	☐	2/24/2016 8:50	5 days	Present	☐	
1602977-001H	AEW-B9 GW	Water	SM5220D (COD)	2	aVOA w/ H2SO4	☐	2/24/2016 8:50	5 days	Present	☐	
1602977-001I	AEW-B9 GW	Water	SM2540D (TSS)	1	1L HDPE, unprsv.	☐	2/24/2016 8:50	5 days	Present	☐	
1602977-001J	AEW-B9 GW	Water	E200.8 (CAM 17) (Dissolved-Lab Filtered)	1	250mL HDPE, unprsv.	☐	2/24/2016 8:50	5 days	Present	☐	
1602977-002A	AEW-B2 GW	Water	SW8021B/8015Bm (G/MBTEX)	2	VOA w/ HCl	☐	2/24/2016 11:10	5 days	Present	☐	
1602977-002B	AEW-B2 GW	Water	SW8015B (TPH-d,mo w/ S.G. Clean-Up)	2	aVOA	☐	2/24/2016 11:10	5 days	Present	☐	
1602977-002C	AEW-B2 GW	Water	SW8260B (VOCs)	2	VOA w/ HCl	☐	2/24/2016 11:10	5 days	Present	☐	
1602977-002D	AEW-B2 GW	Water	SW8270C (SVOCs w/ GPC)	1	1LA	☐	2/24/2016 11:10	5 days	Present	☐	
			SW8270C (SVOCs)			☐		5 days	Present	☑	

NOTES: - STLC and TCLP extractions require 2 days to complete; therefore, all TATs begin after the extraction is completed (i.e., One-day TAT yields results in 3 days from sample submission).

- MAI assumes that all material present in the provided sampling container is considered part of the sample - MAI does not exclude any material from the sample prior to sample preparation unless requested in writing by the client.

McCampbell Analytical, Inc.
"When Quality Counts"

1534 Willow Pass Road, Pittsburg, CA 94565-1701
Toll Free Telephone: (877) 252-9262 / Fax: (925) 252-9269
http://www.mccampbell.com / E-mail: main@mccampbell.com

WORK ORDER SUMMARY

Client Name: AEW ENGINEERING, INC.
Project: 2015-29; Sausalito Gate 5 Characterization
Comments: Hold all soil samples for 6mos per Ken Leung 3/14/14

QC Level: LEVEL 2
Client Contact: Ryder Musselman
Contact's Email: rmusselman@aewengineering.com

Work Order: 1602977
Date Logged: 2/24/2016

☐ WaterTrax ☐ WriteOn ☐ EDF ☑ Excel ☐ Fax ☑ Email ☑ HardCopy ☐ ThirdParty ☐ J-flag

Lab ID	Client ID	Matrix	Test Name	Containers /Composites	Bottle & Preservative	De-chlorinated	Collection Date & Time	TAT	Sediment Content	Hold	SubOut
1602977-002E	AEW-B2 GW	Water	SW8081A/8082 (OC Pesticides+PCBs)	2	aVOA	☐	2/24/2016 11:10	5 days	Present	☐	
1602977-002F	AEW-B2 GW	Water	E200.8 (CAM 17)	1	250mL HDPE w/ HNO3	☐	2/24/2016 11:10	5 days	Present	☐	
1602977-002G	AEW-B2 GW	Water	E1664A (SGT- HEM; Non-polar Material)	1	1LA w/ HCl	☐	2/24/2016 11:10	5 days	Present	☐	
1602977-002H	AEW-B2 GW	Water	SM5220D (COD)	2	aVOA w/ H2SO4	☐	2/24/2016 11:10	5 days	Present	☐	
1602977-002I	AEW-B2 GW	Water	SM2540D (TSS)	1	1L HDPE, unprsv.	☐	2/24/2016 11:10	5 days	Present	☐	
1602977-002J	AEW-B2 GW	Water	E200.8 (CAM 17) (Dissolved-Lab Filtered)	1	250mL HDPE, unprsv.	☐	2/24/2016 11:10	5 days	Present	☐	

NOTES: - STLC and TCLP extractions require 2 days to complete; therefore, all TATs begin after the extraction is completed (i.e., One-day TAT yields results in 3 days from sample submission).

- MAI assumes that all material present in the provided sampling container is considered part of the sample - MAI does not exclude any material from the sample prior to sample preparation unless requested in writing by the client.

1602977

AEW ENGINEERING, INC.

55 New Montgomery Street, Suite 722, San Francisco, CA 94105
Telephone: (415) 495-8422 Fax: (415) 358-5598

CHAIN OF CUSTODY RECORD

Page 1 of 1

TURN AROUND TIME: ☐ 24 HOURS ☐ 48 HOURS ☐ 1 WEEK ☒ Normal Others:

LABORATORY: McCampbell Analytical

Date: 2/24/16

Report To: Randall Young, Ryder Musselman eMail: ryoung@aewengineering.com
Company: AEW Engineering, Inc. eMail: rmusselman@aewengineering.com
Project Name: Sausalito Gate 5 Characterization Location: Sausalito
Sampler: Randall Young, Ryder Musselman Project No.: 2015-29
Sampler: Signature: Bill To: Kenneth Leung
Reporting Requirement: Hard Copy : Yes ☑ No ☐
PDF File: Yes ☑ No ☐ EXCEL Yes ☑ No ☐

SAMPLE ID	LOCATION	Sampling Date	Sampling Time	# of Containers	Type of Container	Matrix: Water	Soil	Air	Sludge	Other	Method Perserved: Ice	HCl	HNO_3	Other	TPH - Gas, BTEX,& MTBE (EPA 8015 Mod)	TPH-Diesel and Motor Oil w/Silica Gel (EPA 8015 Mod)	VOCs (EPA 8260)	SVOCs (EPA 8270) WITH FLORISIL CLEANUP *	~~Pesticides (8081/8082) WITH FLORISIL CLEANUP*~~	PCBs (8081/8082) WITH FLORISIL CLEANUP*	Title 22 Metals (EPA ~~6000/7000~~) TOTAL LEAD	OIL & GREASE EPA 1664	COD SM 5220D	TSS SM 2540D	TITLE 22 METALS DISSOLVED*	Other	Comments
AEW-B9 GW	GATE 5 RD	2/24/16	8:50	15	VARIOUS	X					X	X	X	X	X	X	X	X		X	X	X	X	X	X		
AEW-B2 GW	GATE 5 RD	2/24/16	11:10	15	VARIOUS	X					X	X	X	X	X	X	X	X		X	X	X	X	X	X		

Relinquished By:	Date:	Time:	Received By:
	2/24/16	13:10	
Relinquished By:	Date:	Time:	Received By:
	2-24-16	1440	
Relinquished By:	Date:	Time:	Received By:

Need to achieve ESLs. Please run all applicable clean-ups to achieve ESLs.
Please do not dilute samples. Please contact Randall Young @ (415) 495-8401 if you have any questions. Please hold all samples for 6 months for further analysis.

*PLEASE FILTER & PRESERVE FOR DISSOLVED METALS

McCampbell Analytical, Inc.
"When Quality Counts"

1534 Willow Pass Road, Pittsburg, CA 94565-1701
Toll Free Telephone: (877) 252-9262 / Fax: (925) 252-9269
http://www.mccampbell.com / E-mail: main@mccampbell.com

Sample Receipt Checklist

Client Name:	**AEW Engineering, Inc.**	Date and Time Received:	**2/24/2016 14:40**
Project Name:	**2015-29; Sausalito Gate 5 Characterization**	Date Logged:	**2/24/2016**
WorkOrder №:	**1602977** Matrix: Water	Received by:	Briana Cutino
Carrier:	Bernie Cummins (MAI Courier)	Logged by:	Briana Cutino

Chain of Custody (COC) Information

Chain of custody present?	Yes ☑	No ☐
Chain of custody signed when relinquished and received?	Yes ☑	No ☐
Chain of custody agrees with sample labels?	Yes ☑	No ☐
Sample IDs noted by Client on COC?	Yes ☑	No ☐
Date and Time of collection noted by Client on COC?	Yes ☑	No ☐
Sampler's name noted on COC?	Yes ☑	No ☐

Sample Receipt Information

Custody seals intact on shipping container/cooler?	Yes ☐	No ☐	NA ☑
Shipping container/cooler in good condition?	Yes ☑	No ☐	
Samples in proper containers/bottles?	Yes ☑	No ☐	
Sample containers intact?	Yes ☑	No ☐	
Sufficient sample volume for indicated test?	Yes ☑	No ☐	

Sample Preservation and Hold Time (HT) Information

All samples received within holding time?	Yes ☑	No ☐	
Sample/Temp Blank temperature	Temp: 2°C		NA ☐
Water - VOA vials have zero headspace / no bubbles?	Yes ☑	No ☐	NA ☐
Sample labels checked for correct preservation?	Yes ☑	No ☐	
pH acceptable upon receipt (Metal: <2; 522: <4; 218.7: >8)?	Yes ☑	No ☐	NA ☐
Samples Received on Ice?	Yes ☑	No ☐	
	(Ice Type: WET ICE)		

UCMR3 Samples:

Total Chlorine tested and acceptable upon receipt for EPA 522?	Yes ☐	No ☐	NA ☑
Free Chlorine tested and acceptable upon receipt for EPA 218.7, 300.1, 537, 539?	Yes ☐	No ☐	NA ☑

** NOTE: If the "No" box is checked, see comments below.*

Comments:

McCampbell Analytical, Inc.

"When Quality Counts"

Analytical Report

WorkOrder: 1602A53

Report Created for: AEW Engineering, Inc.

55 New Montgomery St, Ste 722
San Francisco, CA 94105

Project Contact: Randy Young
Project P.O.:
Project Name: 2015-29; Sausalito Gate 5 Characterization

Project Received: 02/25/2016

Analytical Report reviewed & approved for release on 03/02/2016 by:

Angela Rydelius,
Laboratory Manager

The report shall not be reproduced except in full, without the written approval of the laboratory. The analytical results relate only to the items tested. Results reported conform to the most current NELAP standards, where applicable, unless otherwise stated in the case narrative.

McCampbell Analytical, Inc.
"When Quality Counts"

1534 Willow Pass Road, Pittsburg, CA 94565-1701
Toll Free Telephone: (877) 252-9262 / Fax: (925) 252-9269
http://www.mccampbell.com / E-mail: main@mccampbell.com

Glossary of Terms & Qualifier Definitions

Client: AEW Engineering, Inc.
Project: 2015-29; Sausalito Gate 5 Characterization
WorkOrder: 1602A53

Glossary Abbreviation

95% Interval	95% Confident Interval
DF	Dilution Factor
DI WET	(DISTLC) Waste Extraction Test using DI water
DISS	Dissolved (direct analysis of 0.45 µm filtered and acidified water sample)
DLT	Dilution Test
DUP	Duplicate
EDL	Estimated Detection Limit
ITEF	International Toxicity Equivalence Factor
LCS	Laboratory Control Sample
MB	Method Blank
MB % Rec	% Recovery of Surrogate in Method Blank, if applicable
MDL	Method Detection Limit
ML	Minimum Level of Quantitation
MS	Matrix Spike
MSD	Matrix Spike Duplicate
N/A	Not Applicable
ND	Not detected at or above the indicated MDL or RL
NR	Data Not Reported due to matrix interference or insufficient sample amount.
PDS	Post Digestion Spike
PDSD	Post Digestion Spike Duplicate
PF	Prep Factor
RD	Relative Difference
RL	Reporting Limit (The RL is the lowest calibration standard in a multipoint calibration.)
RPD	Relative Percent Deviation
RRT	Relative Retention Time
SPK Val	Spike Value
SPKRef Val	Spike Reference Value
SPLP	Synthetic Precipitation Leachate Procedure
ST	Sorbent Tube
TCLP	Toxicity Characteristic Leachate Procedure
TEQ	Toxicity Equivalents
WET (STLC)	Waste Extraction Test (Soluble Threshold Limit Concentration)

McCampbell Analytical, Inc.
"When Quality Counts"

1534 Willow Pass Road, Pittsburg, CA 94565-1701
Toll Free Telephone: (877) 252-9262 / Fax: (925) 252-9269
http://www.mccampbell.com / E-mail: main@mccampbell.com

Glossary of Terms & Qualifier Definitions

Client: AEW Engineering, Inc.
Project: 2015-29; Sausalito Gate 5 Characterization
WorkOrder: 1602A53

Analytical Qualifiers

S	Surrogate spike recovery outside accepted recovery limits
F	sample was filtered upon arrival to the lab
a1	sample diluted due to matrix interference
a3	sample diluted due to high organic content.
a10	reporting limit changed due to variable volume of air that pumped through each filter / sorbent tube.
a11	reporting limit near, but not identical to our standard reporting limit due to variable wipe sample area/weight
a14	reporting limit raised due to the physical nature of the sample
b1	aqueous sample that contains greater than ~1 vol. % sediment
c2	surrogate recovery outside of the control limits due to matrix interference.
e2	diesel range compounds are significant; no recognizable pattern
e7	oil range compounds are significant
e8	kerosene/kerosene range/jet fuel range

Quality Control Qualifiers

F8	MS/MSD recovery and/or RPD was out of acceptance criteria; PDS validated the prep batch. If PDS recovery was out of acceptance criteria, DLT validated the prep batch.

McCampbell Analytical, Inc.
"When Quality Counts"

1534 Willow Pass Road, Pittsburg, CA 94565-1701
Toll Free Telephone: (877) 252-9262 / Fax: (925) 252-9269
http://www.mccampbell.com / E-mail: main@mccampbell.com

Analytical Report

Client:	AEW Engineering, Inc.	**WorkOrder:**	1602A53
Date Received:	2/25/16 16:35	**Extraction Method:**	E1664A_SG
Date Prepared:	3/1/16	**Analytical Method:**	E1664A
Project:	2015-29; Sausalito Gate 5 Characterization	**Unit:**	mg/L

Hexane Extractable Material with Silica Gel Clean-Up

Client ID	Lab ID	Matrix	Date Collected	Instrument	Batch ID
AEW- B11 GW	**1602A53-001J**	**Water**	**02/25/2016 09:30**	**O&G**	**117372**

Analytes	Result	RL	DF	Date Analyzed
HEMSGT	**17**	5.0	1	03/02/2016 14:10

Analyst(s): HN

Analytical Comments: b1

McCampbell Analytical, Inc.
"When Quality Counts"

1534 Willow Pass Road, Pittsburg, CA 94565-1701
Toll Free Telephone: (877) 252-9262 / Fax: (925) 252-9269
http://www.mccampbell.com / E-mail: main@mccampbell.com

Analytical Report

Client:	AEW Engineering, Inc.	**WorkOrder:**	1602A53
Date Received:	2/25/16 16:35	**Extraction Method:**	SW3510C
Date Prepared:	2/25/16	**Analytical Method:**	SW8081A/8082
Project:	2015-29; Sausalito Gate 5 Characterization	**Unit:**	µg/L

Organochlorine Pesticides (Basic Target List) + PCBs

Client ID	Lab ID	Matrix	Date Collected	Instrument	Batch ID
AEW- B11 GW	**1602A53-001E**	**Water**	**02/25/2016 09:30**	**GC20**	**117175**

Analytes	Result	RL	DF	Date Analyzed
Aldrin	ND	0.30	20	02/26/2016 14:43
a-BHC	ND	0.60	20	02/26/2016 14:43
b-BHC	ND	0.30	20	02/26/2016 14:43
d-BHC	ND	0.30	20	02/26/2016 14:43
g-BHC	ND	1.2	20	02/26/2016 14:43
Chlordane (Technical)	ND	6.0	20	02/26/2016 14:43
a-Chlordane	ND	3.0	20	02/26/2016 14:43
g-Chlordane	ND	3.0	20	02/26/2016 14:43
p,p-DDD	ND	0.60	20	02/26/2016 14:43
p,p-DDE	ND	0.60	20	02/26/2016 14:43
p,p-DDT	ND	0.60	20	02/26/2016 14:43
Dieldrin	ND	0.60	20	02/26/2016 14:43
Endosulfan I	ND	1.2	20	02/26/2016 14:43
Endosulfan II	ND	1.2	20	02/26/2016 14:43
Endosulfan sulfate	ND	3.0	20	02/26/2016 14:43
Endrin	ND	0.60	20	02/26/2016 14:43
Endrin aldehyde	ND	3.0	20	02/26/2016 14:43
Endrin ketone	ND	3.0	20	02/26/2016 14:43
Heptachlor	ND	0.60	20	02/26/2016 14:43
Heptachlor epoxide	ND	0.60	20	02/26/2016 14:43
Hexachlorobenzene	ND	30	20	02/26/2016 14:43
Hexachlorocyclopentadiene	ND	60	20	02/26/2016 14:43
Methoxychlor	ND	6.0	20	02/26/2016 14:43
Toxaphene	ND	30	20	02/26/2016 14:43
Aroclor1016	ND	30	20	02/26/2016 14:43
Aroclor1221	ND	30	20	02/26/2016 14:43
Aroclor1232	ND	30	20	02/26/2016 14:43
Aroclor1242	ND	30	20	02/26/2016 14:43
Aroclor1248	ND	30	20	02/26/2016 14:43
Aroclor1254	ND	30	20	02/26/2016 14:43
Aroclor1260	ND	30	20	02/26/2016 14:43
PCBs, total	ND	30	20	02/26/2016 14:43

Surrogates	REC (%)	Limits	
Decachlorobiphenyl	103	70-130	02/26/2016 14:43

Analyst(s): CK

Analytical Comments: a3,a14,b1

McCampbell Analytical, Inc.
"When Quality Counts"

1534 Willow Pass Road, Pittsburg, CA 94565-1701
Toll Free Telephone: (877) 252-9262 / Fax: (925) 252-9269
http://www.mccampbell.com / E-mail: main@mccampbell.com

Analytical Report

Client:	AEW Engineering, Inc.	**WorkOrder:**	1602A53
Date Received:	2/25/16 16:35	**Extraction Method:**	SW5030B
Date Prepared:	2/27/16	**Analytical Method:**	SW8260B
Project:	2015-29; Sausalito Gate 5 Characterization	**Unit:**	µg/L

Volatile Organics by P&T and GC/MS (Basic Target List)

Client ID	Lab ID	Matrix	Date Collected	Instrument	Batch ID
AEW- B11 GW	**1602A53-001C**	**Water**	**02/25/2016 09:30**	**GC10**	**117277**

Analytes	Result	RL	DF	Date Analyzed
Acetone	ND	10	1	02/27/2016 00:03
tert-Amyl methyl ether (TAME)	ND	0.50	1	02/27/2016 00:03
Benzene	ND	0.50	1	02/27/2016 00:03
Bromobenzene	ND	0.50	1	02/27/2016 00:03
Bromochloromethane	ND	0.50	1	02/27/2016 00:03
Bromodichloromethane	ND	0.50	1	02/27/2016 00:03
Bromoform	ND	0.50	1	02/27/2016 00:03
Bromomethane	ND	0.50	1	02/27/2016 00:03
2-Butanone (MEK)	ND	2.0	1	02/27/2016 00:03
t-Butyl alcohol (TBA)	ND	2.0	1	02/27/2016 00:03
n-Butyl benzene	ND	0.50	1	02/27/2016 00:03
sec-Butyl benzene	ND	0.50	1	02/27/2016 00:03
tert-Butyl benzene	ND	0.50	1	02/27/2016 00:03
Carbon Disulfide	ND	0.50	1	02/27/2016 00:03
Carbon Tetrachloride	ND	0.50	1	02/27/2016 00:03
Chlorobenzene	ND	0.50	1	02/27/2016 00:03
Chloroethane	ND	0.50	1	02/27/2016 00:03
Chloroform	ND	0.50	1	02/27/2016 00:03
Chloromethane	ND	0.50	1	02/27/2016 00:03
2-Chlorotoluene	ND	0.50	1	02/27/2016 00:03
4-Chlorotoluene	ND	0.50	1	02/27/2016 00:03
Dibromochloromethane	ND	0.50	1	02/27/2016 00:03
1,2-Dibromo-3-chloropropane	ND	0.20	1	02/27/2016 00:03
1,2-Dibromoethane (EDB)	ND	0.50	1	02/27/2016 00:03
Dibromomethane	ND	0.50	1	02/27/2016 00:03
1,2-Dichlorobenzene	ND	0.50	1	02/27/2016 00:03
1,3-Dichlorobenzene	ND	0.50	1	02/27/2016 00:03
1,4-Dichlorobenzene	ND	0.50	1	02/27/2016 00:03
Dichlorodifluoromethane	ND	0.50	1	02/27/2016 00:03
1,1-Dichloroethane	**0.94**	0.50	1	02/27/2016 00:03
1,2-Dichloroethane (1,2-DCA)	ND	0.50	1	02/27/2016 00:03
1,1-Dichloroethene	ND	0.50	1	02/27/2016 00:03
cis-1,2-Dichloroethene	ND	0.50	1	02/27/2016 00:03
trans-1,2-Dichloroethene	ND	0.50	1	02/27/2016 00:03
1,2-Dichloropropane	ND	0.50	1	02/27/2016 00:03
1,3-Dichloropropane	ND	0.50	1	02/27/2016 00:03
2,2-Dichloropropane	ND	0.50	1	02/27/2016 00:03

(Cont.)

McCampbell Analytical, Inc.
"When Quality Counts"

1534 Willow Pass Road, Pittsburg, CA 94565-1701
Toll Free Telephone: (877) 252-9262 / Fax: (925) 252-9269
http://www.mccampbell.com / E-mail: main@mccampbell.com

Analytical Report

Client:	AEW Engineering, Inc.	**WorkOrder:**	1602A53
Date Received:	2/25/16 16:35	**Extraction Method:**	SW5030B
Date Prepared:	2/27/16	**Analytical Method:**	SW8260B
Project:	2015-29; Sausalito Gate 5 Characterization	**Unit:**	µg/L

Volatile Organics by P&T and GC/MS (Basic Target List)

Client ID	Lab ID	Matrix	Date Collected	Instrument	Batch ID
AEW- B11 GW	**1602A53-001C**	**Water**	**02/25/2016 09:30**	**GC10**	**117277**

Analytes	Result	RL	DF	Date Analyzed
1,1-Dichloropropene	ND	0.50	1	02/27/2016 00:03
cis-1,3-Dichloropropene	ND	0.50	1	02/27/2016 00:03
trans-1,3-Dichloropropene	ND	0.50	1	02/27/2016 00:03
Diisopropyl ether (DIPE)	ND	0.50	1	02/27/2016 00:03
Ethylbenzene	ND	0.50	1	02/27/2016 00:03
Ethyl tert-butyl ether (ETBE)	ND	0.50	1	02/27/2016 00:03
Freon 113	ND	0.50	1	02/27/2016 00:03
Hexachlorobutadiene	ND	0.50	1	02/27/2016 00:03
Hexachloroethane	ND	0.50	1	02/27/2016 00:03
2-Hexanone	ND	0.50	1	02/27/2016 00:03
Isopropylbenzene	ND	0.50	1	02/27/2016 00:03
4-Isopropyl toluene	**0.63**	0.50	1	02/27/2016 00:03
Methyl-t-butyl ether (MTBE)	**0.62**	0.50	1	02/27/2016 00:03
Methylene chloride	ND	0.50	1	02/27/2016 00:03
4-Methyl-2-pentanone (MIBK)	ND	0.50	1	02/27/2016 00:03
Naphthalene	ND	0.50	1	02/27/2016 00:03
n-Propyl benzene	ND	0.50	1	02/27/2016 00:03
Styrene	ND	0.50	1	02/27/2016 00:03
1,1,1,2-Tetrachloroethane	ND	0.50	1	02/27/2016 00:03
1,1,2,2-Tetrachloroethane	ND	0.50	1	02/27/2016 00:03
Tetrachloroethene	ND	0.50	1	02/27/2016 00:03
Toluene	ND	0.50	1	02/27/2016 00:03
1,2,3-Trichlorobenzene	ND	0.50	1	02/27/2016 00:03
1,2,4-Trichlorobenzene	ND	0.50	1	02/27/2016 00:03
1,1,1-Trichloroethane	**0.68**	0.50	1	02/27/2016 00:03
1,1,2-Trichloroethane	ND	0.50	1	02/27/2016 00:03
Trichloroethene	ND	0.50	1	02/27/2016 00:03
Trichlorofluoromethane	ND	0.50	1	02/27/2016 00:03
1,2,3-Trichloropropane	ND	0.50	1	02/27/2016 00:03
1,2,4-Trimethylbenzene	ND	0.50	1	02/27/2016 00:03
1,3,5-Trimethylbenzene	ND	0.50	1	02/27/2016 00:03
Vinyl Chloride	ND	0.50	1	02/27/2016 00:03
Xylenes, Total	ND	0.50	1	02/27/2016 00:03

(Cont.)

McCampbell Analytical, Inc.
"When Quality Counts"

1534 Willow Pass Road, Pittsburg, CA 94565-1701
Toll Free Telephone: (877) 252-9262 / Fax: (925) 252-9269
http://www.mccampbell.com / E-mail: main@mccampbell.com

Analytical Report

Client:	AEW Engineering, Inc.	**WorkOrder:**	1602A53
Date Received:	2/25/16 16:35	**Extraction Method:**	SW5030B
Date Prepared:	2/27/16	**Analytical Method:**	SW8260B
Project:	2015-29; Sausalito Gate 5 Characterization	**Unit:**	µg/L

Volatile Organics by P&T and GC/MS (Basic Target List)

Client ID	Lab ID	Matrix	Date Collected	Instrument	Batch ID
AEW- B11 GW	**1602A53-001C**	**Water**	**02/25/2016 09:30**	**GC10**	**117277**

Analytes	Result	RL	DF	Date Analyzed
Surrogates	REC (%)	Limits		
Dibromofluoromethane	107	70-130		02/27/2016 00:03
Toluene-d8	109	70-130		02/27/2016 00:03
4-BFB	81	70-130		02/27/2016 00:03

Analyst(s): AK Analytical Comments: b1

McCampbell Analytical, Inc.
"When Quality Counts"

1534 Willow Pass Road, Pittsburg, CA 94565-1701
Toll Free Telephone: (877) 252-9262 / Fax: (925) 252-9269
http://www.mccampbell.com / E-mail: main@mccampbell.com

Analytical Report

Client:	AEW Engineering, Inc.	**WorkOrder:**	1602A53
Date Received:	2/25/16 16:35	**Extraction Method:**	E625
Date Prepared:	2/26/16	**Analytical Method:**	SW8270C
Project:	2015-29; Sausalito Gate 5 Characterization	**Unit:**	µg/L

Semi-Volatile Organics by GC/MS (Basic Target List)

Client ID	Lab ID	Matrix	Date Collected	Instrument	Batch ID
AEW- B11 GW	**1602A53-001D**	**Water**	**02/25/2016 09:30**	**GC17**	**117318**

Analytes	Result	RL	DF	Date Analyzed
Acenaphthene	ND	2.0	1	03/01/2016 00:13
Acenaphthylene	ND	2.0	1	03/01/2016 00:13
Acetochlor	ND	2.0	1	03/01/2016 00:13
Anthracene	ND	2.0	1	03/01/2016 00:13
Benzidine	ND	10	1	03/01/2016 00:13
Benzo (a) anthracene	ND	2.0	1	03/01/2016 00:13
Benzo (a) pyrene	ND	2.0	1	03/01/2016 00:13
Benzo (b) fluoranthene	ND	2.0	1	03/01/2016 00:13
Benzo (g,h,i) perylene	ND	2.0	1	03/01/2016 00:13
Benzo (k) fluoranthene	ND	2.0	1	03/01/2016 00:13
Benzyl Alcohol	ND	10	1	03/01/2016 00:13
1,1-Biphenyl	ND	2.0	1	03/01/2016 00:13
Bis (2-chloroethoxy) Methane	ND	2.0	1	03/01/2016 00:13
Bis (2-chloroethyl) Ether	ND	2.0	1	03/01/2016 00:13
Bis (2-chloroisopropyl) Ether	ND	2.0	1	03/01/2016 00:13
Bis (2-ethylhexyl) Adipate	ND	2.0	1	03/01/2016 00:13
Bis (2-ethylhexyl) Phthalate	ND	4.0	1	03/01/2016 00:13
4-Bromophenyl Phenyl Ether	ND	10	1	03/01/2016 00:13
Butylbenzyl Phthalate	ND	2.0	1	03/01/2016 00:13
4-Chloroaniline	ND	4.0	1	03/01/2016 00:13
4-Chloro-3-methylphenol	ND	10	1	03/01/2016 00:13
2-Chloronaphthalene	ND	2.0	1	03/01/2016 00:13
2-Chlorophenol	ND	2.0	1	03/01/2016 00:13
4-Chlorophenyl Phenyl Ether	ND	2.0	1	03/01/2016 00:13
Chrysene	ND	2.0	1	03/01/2016 00:13
Dibenzo (a,h) anthracene	ND	2.0	1	03/01/2016 00:13
Dibenzofuran	ND	2.0	1	03/01/2016 00:13
Di-n-butyl Phthalate	ND	2.0	1	03/01/2016 00:13
1,2-Dichlorobenzene	ND	2.0	1	03/01/2016 00:13
1,3-Dichlorobenzene	ND	2.0	1	03/01/2016 00:13
1,4-Dichlorobenzene	ND	2.0	1	03/01/2016 00:13
3,3-Dichlorobenzidine	ND	4.0	1	03/01/2016 00:13
2,4-Dichlorophenol	ND	2.0	1	03/01/2016 00:13
Diethyl Phthalate	ND	2.0	1	03/01/2016 00:13
2,4-Dimethylphenol	ND	2.0	1	03/01/2016 00:13
Dimethyl Phthalate	ND	2.0	1	03/01/2016 00:13
4,6-Dinitro-2-methylphenol	ND	10	1	03/01/2016 00:13

(Cont.)

McCampbell Analytical, Inc.
"When Quality Counts"

1534 Willow Pass Road, Pittsburg, CA 94565-1701
Toll Free Telephone: (877) 252-9262 / Fax: (925) 252-9269
http://www.mccampbell.com / E-mail: main@mccampbell.com

Analytical Report

Client:	AEW Engineering, Inc.	**WorkOrder:**	1602A53
Date Received:	2/25/16 16:35	**Extraction Method:**	E625
Date Prepared:	2/26/16	**Analytical Method:**	SW8270C
Project:	2015-29; Sausalito Gate 5 Characterization	**Unit:**	µg/L

Semi-Volatile Organics by GC/MS (Basic Target List)

Client ID	Lab ID	Matrix	Date Collected	Instrument	Batch ID
AEW- B11 GW	**1602A53-001D**	**Water**	**02/25/2016 09:30**	**GC17**	**117318**

Analytes	Result	RL	DF	Date Analyzed
2,4-Dinitrophenol	ND	25	1	03/01/2016 00:13
2,4-Dinitrotoluene	ND	2.0	1	03/01/2016 00:13
2,6-Dinitrotoluene	ND	2.0	1	03/01/2016 00:13
Di-n-octyl Phthalate	ND	2.0	1	03/01/2016 00:13
1,2-Diphenylhydrazine	ND	2.0	1	03/01/2016 00:13
Fluoranthene	ND	2.0	1	03/01/2016 00:13
Fluorene	ND	2.0	1	03/01/2016 00:13
Hexachlorobenzene	ND	2.0	1	03/01/2016 00:13
Hexachlorobutadiene	ND	2.0	1	03/01/2016 00:13
Hexachlorocyclopentadiene	ND	10	1	03/01/2016 00:13
Hexachloroethane	ND	2.0	1	03/01/2016 00:13
Indeno (1,2,3-cd) pyrene	ND	2.0	1	03/01/2016 00:13
Isophorone	ND	2.0	1	03/01/2016 00:13
2-Methylnaphthalene	ND	2.0	1	03/01/2016 00:13
2-Methylphenol (o-Cresol)	ND	2.0	1	03/01/2016 00:13
3 & 4-Methylphenol (m,p-Cresol)	ND	2.0	1	03/01/2016 00:13
Naphthalene	ND	2.0	1	03/01/2016 00:13
2-Nitroaniline	ND	10	1	03/01/2016 00:13
3-Nitroaniline	ND	10	1	03/01/2016 00:13
4-Nitroaniline	ND	10	1	03/01/2016 00:13
Nitrobenzene	ND	2.0	1	03/01/2016 00:13
2-Nitrophenol	ND	10	1	03/01/2016 00:13
4-Nitrophenol	ND	10	1	03/01/2016 00:13
N-Nitrosodiphenylamine	ND	2.0	1	03/01/2016 00:13
N-Nitrosodi-n-propylamine	ND	2.0	1	03/01/2016 00:13
Pentachlorophenol	ND	10	1	03/01/2016 00:13
Phenanthrene	ND	2.0	1	03/01/2016 00:13
Phenol	ND	2.0	1	03/01/2016 00:13
Pyrene	ND	2.0	1	03/01/2016 00:13
1,2,4-Trichlorobenzene	ND	2.0	1	03/01/2016 00:13
2,4,5-Trichlorophenol	ND	2.0	1	03/01/2016 00:13
2,4,6-Trichlorophenol	ND	2.0	1	03/01/2016 00:13

(Cont.)

McCampbell Analytical, Inc.
"When Quality Counts"

1534 Willow Pass Road, Pittsburg, CA 94565-1701
Toll Free Telephone: (877) 252-9262 / Fax: (925) 252-9269
http://www.mccampbell.com / E-mail: main@mccampbell.com

Analytical Report

Client:	AEW Engineering, Inc.	**WorkOrder:**	1602A53
Date Received:	2/25/16 16:35	**Extraction Method:**	E625
Date Prepared:	2/26/16	**Analytical Method:**	SW8270C
Project:	2015-29; Sausalito Gate 5 Characterization	**Unit:**	µg/L

Semi-Volatile Organics by GC/MS (Basic Target List)

Client ID	Lab ID	Matrix	Date Collected	Instrument	Batch ID
AEW- B11 GW	**1602A53-001D**	**Water**	**02/25/2016 09:30**	**GC17**	**117318**

Analytes	Result		RL	DF	Date Analyzed
Surrogates	REC (%)	Qualifiers	Limits		
2-Fluorophenol	2	S	8-130		03/01/2016 00:13
Phenol-d5	10		5-130		03/01/2016 00:13
Nitrobenzene-d5	56		20-140		03/01/2016 00:13
2-Fluorobiphenyl	65		40-140		03/01/2016 00:13
2,4,6-Tribromophenol	13	S	16-180		03/01/2016 00:13
4-Terphenyl-d14	131		40-170		03/01/2016 00:13

Analyst(s): REB

Analytical Comments: a11,c2,b1

McCampbell Analytical, Inc.
"When Quality Counts"

1534 Willow Pass Road, Pittsburg, CA 94565-1701
Toll Free Telephone: (877) 252-9262 / Fax: (925) 252-9269
http://www.mccampbell.com / E-mail: main@mccampbell.com

Analytical Report

Client:	AEW Engineering, Inc.	**WorkOrder:**	1602A53
Date Received:	2/25/16 16:35	**Extraction Method:**	E200.8
Date Prepared:	2/25/16	**Analytical Method:**	E200.8
Project:	2015-29; Sausalito Gate 5 Characterization	**Unit:**	µg/L

Dissolved CAM / CCR 17 Metals

Client ID	Lab ID	Matrix	Date Collected	Instrument	Batch ID
AEW- B11 GW	**1602A53-001G**	**Water**	**02/25/2016 09:30**	**ICP-MS3**	**117231**

Analytes	Result	Qualifiers	RL	DF	Date Analyzed
Antimony	ND	F	5.0	10	02/26/2016 20:52
Arsenic	ND	F	5.0	10	02/26/2016 20:52
Barium	**67**	F	50	10	02/26/2016 20:52
Beryllium	ND	F	5.0	10	02/26/2016 20:52
Cadmium	ND	F	2.5	10	02/26/2016 20:52
Chromium	ND	F	5.0	10	02/26/2016 20:52
Cobalt	**11**	F	5.0	10	02/26/2016 20:52
Copper	ND	F	20	10	02/26/2016 20:52
Lead	ND	F	5.0	10	02/26/2016 20:52
Mercury	ND	F	0.25	10	02/26/2016 20:52
Molybdenum	**91**	F	5.0	10	02/26/2016 20:52
Nickel	**29**	F	5.0	10	02/26/2016 20:52
Selenium	ND	F	5.0	10	02/26/2016 20:52
Silver	ND	F	1.9	10	02/26/2016 20:52
Thallium	ND	F	5.0	10	02/26/2016 20:52
Vanadium	ND	F	5.0	10	02/26/2016 20:52
Zinc	ND	F	150	10	02/26/2016 20:52

Analyst(s): BBO

Analytical Comments: a10,b1

McCampbell Analytical, Inc.
"When Quality Counts"

1534 Willow Pass Road, Pittsburg, CA 94565-1701
Toll Free Telephone: (877) 252-9262 / Fax: (925) 252-9269
http://www.mccampbell.com / E-mail: main@mccampbell.com

Analytical Report

Client:	AEW Engineering, Inc.	**WorkOrder:**	1602A53
Date Received:	2/25/16 16:35	**Extraction Method:**	E200.8
Date Prepared:	2/29/16	**Analytical Method:**	E200.8
Project:	2015-29; Sausalito Gate 5 Characterization	**Unit:**	µg/L

CAM / CCR 17 Metals

Client ID	Lab ID	Matrix	Date Collected	Instrument	Batch ID
AEW- B11 GW	**1602A53-001F**	**Water**	**02/25/2016 09:30**	**ICP-MS2**	**117335**

Analytes	Result	RL	DF	Date Analyzed
Antimony	ND	10	20	02/29/2016 23:57
Arsenic	**330**	10	20	02/29/2016 23:57
Barium	**3400**	100	20	02/29/2016 23:57
Beryllium	**40**	10	20	02/29/2016 23:57
Cadmium	**29**	5.0	20	02/29/2016 23:57
Chromium	**3300**	10	20	02/29/2016 23:57
Cobalt	**1600**	10	20	02/29/2016 23:57
Copper	**2000**	40	20	02/29/2016 23:57
Lead	**860**	10	20	02/29/2016 23:57
Mercury	**0.62**	0.50	20	02/29/2016 23:57
Molybdenum	**36**	10	20	02/29/2016 23:57
Nickel	**8800**	10	20	02/29/2016 23:57
Selenium	**12**	10	20	02/29/2016 23:57
Silver	ND	3.8	20	02/29/2016 23:57
Thallium	ND	10	20	02/29/2016 23:57
Vanadium	**1800**	10	20	02/29/2016 23:57
Zinc	**2400**	300	20	02/29/2016 23:57

Surrogates	REC (%)	Limits	
Terbium	91	70-130	02/29/2016 23:57

Analyst(s): DVH

Analytical Comments: a1,b1

McCampbell Analytical, Inc.
"When Quality Counts"

1534 Willow Pass Road, Pittsburg, CA 94565-1701
Toll Free Telephone: (877) 252-9262 / Fax: (925) 252-9269
http://www.mccampbell.com / E-mail: main@mccampbell.com

Analytical Report

Client:	AEW Engineering, Inc.	**WorkOrder:**	1602A53
Date Received:	2/25/16 16:35	**Extraction Method:**	SM5220 D-1997
Date Prepared:	2/29/16	**Analytical Method:**	SM5220 D-1997
Project:	2015-29; Sausalito Gate 5 Characterization	**Unit:**	mg/L

Chemical Oxygen Demand (COD) as mg O2 /L

Client ID	Lab ID	Matrix	Date Collected	Instrument	Batch ID
AEW- B11 GW	**1602A53-001I**	**Water**	**02/25/2016 09:30**	**SPECTROPHOTOMETER**	**117392**

Analytes	Result	RL	DF	Date Analyzed
COD	**5200**	200	20	02/29/2016 18:05

Analyst(s): RB

Analytical Comments: b1

McCampbell Analytical, Inc.
"When Quality Counts"

1534 Willow Pass Road, Pittsburg, CA 94565-1701
Toll Free Telephone: (877) 252-9262 / Fax: (925) 252-9269
http://www.mccampbell.com / E-mail: main@mccampbell.com

Analytical Report

Client:	AEW Engineering, Inc.	**WorkOrder:**	1602A53
Date Received:	2/25/16 16:35	**Extraction Method:**	SW5030B
Date Prepared:	2/26/16	**Analytical Method:**	SW8021B/8015Bm
Project:	2015-29; Sausalito Gate 5 Characterization	**Unit:**	µg/L

Gasoline Range (C6-C12) Volatile Hydrocarbons as Gasoline with BTEX and MTBE

Client ID	Lab ID	Matrix	Date Collected	Instrument	Batch ID
AEW- B11 GW	**1602A53-001A**	**Water**	**02/25/2016 09:30**	**GC3**	**117339**

Analytes	Result	RL	DF	Date Analyzed
TPH(g)	ND	50	1	02/26/2016 15:58
MTBE	ND	5.0	1	02/26/2016 15:58
Benzene	ND	0.50	1	02/26/2016 15:58
Toluene	ND	0.50	1	02/26/2016 15:58
Ethylbenzene	ND	0.50	1	02/26/2016 15:58
Xylenes	ND	1.5	1	02/26/2016 15:58

Surrogates	REC (%)	Limits	
aaa-TFT	98	70-130	02/26/2016 15:58

Analyst(s): IA Analytical Comments: b1

McCampbell Analytical, Inc.
"When Quality Counts"

1534 Willow Pass Road, Pittsburg, CA 94565-1701
Toll Free Telephone: (877) 252-9262 / Fax: (925) 252-9269
http://www.mccampbell.com / E-mail: main@mccampbell.com

Analytical Report

Client:	AEW Engineering, Inc.	**WorkOrder:**	1602A53
Date Received:	2/25/16 16:35	**Extraction Method:**	SW3510C/3630C
Date Prepared:	2/25/16	**Analytical Method:**	SW8015B
Project:	2015-29; Sausalito Gate 5 Characterization	**Unit:**	µg/L

Total Extractable Petroleum Hydrocarbons w/ SG Clean-Up

Client ID	Lab ID	Matrix	Date Collected	Instrument	Batch ID
AEW- B11 GW	**1602A53-001B**	**Water**	**02/25/2016 09:30**	**GC39B**	**117201**

Analytes	Result	RL	DF	Date Analyzed
TPH-Diesel (C10-C23)	**250**	150	1	02/26/2016 11:57
TPH-Motor Oil (C18-C36)	**4300**	750	1	02/26/2016 11:57

Surrogates	REC (%)	Limits	
C9	101	70-130	02/26/2016 11:57

Analyst(s): TK

Analytical Comments: e7,e2,e8,b1

McCampbell Analytical, Inc.
"When Quality Counts"

1534 Willow Pass Road, Pittsburg, CA 94565-1701
Toll Free Telephone: (877) 252-9262 / Fax: (925) 252-9269
http://www.mccampbell.com / E-mail: main@mccampbell.com

Analytical Report

Client:	AEW Engineering, Inc.	**WorkOrder:**	1602A53
Date Received:	2/25/16 16:35	**Extraction Method:**	SM2540 D-1997
Date Prepared:	2/26/16	**Analytical Method:**	SM2540 D-1997
Project:	2015-29; Sausalito Gate 5 Characterization	**Unit:**	mg/L

Total Suspended Solids

Client ID	Lab ID	Matrix	Date Collected	Instrument	Batch ID
AEW- B11 GW	**1602A53-001H**	**Water**	**02/25/2016 09:30**	**WetChem**	**117303**

Analytes	Result	RL	DF	Date Analyzed
Total Suspended Solids	**338,000**	500	500	02/26/2016 16:55

Analyst(s): AL

Analytical Comments: b1

McCampbell Analytical, Inc.
"When Quality Counts"

1534 Willow Pass Road, Pittsburg, CA 94565-1701
Toll Free Telephone: (877) 252-9262 / Fax: (925) 252-9269
http://www.mccampbell.com / E-mail: main@mccampbell.com

Quality Control Report

Client:	AEW Engineering, Inc.	**WorkOrder:**	1602A53
Date Prepared:	2/29/16	**BatchID:**	117372
Date Analyzed:	3/1/16	**Extraction Method:**	E1664A_SG
Instrument:	O&G	**Analytical Method:**	E1664A
Matrix:	Water	**Unit:**	mg/L
Project:	2015-29; Sausalito Gate 5 Characterization	**Sample ID:**	MB/LCS-117372

QC Summary Report for E1664A

Analyte	MB Result	LCS Result	RL	SPK Val	MB SS %REC	LCS %REC	LCS Limits
HEMSGT	ND	9.59	5.0	10.42	-	92	70-130

McCampbell Analytical, Inc.
"When Quality Counts"

1534 Willow Pass Road, Pittsburg, CA 94565-1701
Toll Free Telephone: (877) 252-9262 / Fax: (925) 252-9269
http://www.mccampbell.com / E-mail: main@mccampbell.com

Quality Control Report

Client:	AEW Engineering, Inc.	**WorkOrder:**	1602A53
Date Prepared:	2/24/16	**BatchID:**	117175
Date Analyzed:	2/24/16	**Extraction Method:**	SW3510C
Instrument:	GC20	**Analytical Method:**	SW8081A/8082
Matrix:	Water	**Unit:**	µg/L
Project:	2015-29; Sausalito Gate 5 Characterization	**Sample ID:**	MB/LCS-117175

QC Summary Report for SW8081A/8082

Analyte	MB Result	LCS Result	RL	SPK Val	MB SS %REC	LCS %REC	LCS Limits
Aldrin	ND	1.07	0.0050	1.25	-	86	70-130
a-BHC	ND	-	0.010	-	-	-	-
b-BHC	ND	-	0.0050	-	-	-	-
d-BHC	ND	-	0.0050	-	-	-	-
g-BHC	ND	1.11	0.020	1.25	-	89	70-130
Chlordane (Technical)	ND	-	0.10	-	-	-	-
a-Chlordane	ND	-	0.050	-	-	-	-
g-Chlordane	ND	-	0.050	-	-	-	-
p,p-DDD	ND	-	0.010	-	-	-	-
p,p-DDE	ND	-	0.010	-	-	-	-
p,p-DDT	ND	1.20	0.010	1.25	-	96	70-130
Dieldrin	ND	1.29	0.010	1.25	-	103	70-130
Endosulfan I	ND	-	0.020	-	-	-	-
Endosulfan II	ND	-	0.020	-	-	-	-
Endosulfan sulfate	ND	-	0.050	-	-	-	-
Endrin	ND	1.13	0.010	1.25	-	90	70-130
Endrin aldehyde	ND	-	0.050	-	-	-	-
Endrin ketone	ND	-	0.050	-	-	-	-
Heptachlor	ND	0.988	0.010	1.25	-	79	70-130
Heptachlor epoxide	ND	-	0.010	-	-	-	-
Hexachlorobenzene	ND	-	0.50	-	-	-	-
Hexachlorocyclopentadiene	ND	-	1.0	-	-	-	-
Methoxychlor	ND	-	0.10	-	-	-	-
Toxaphene	ND	-	0.50	-	-	-	-
Aroclor1016	ND	-	0.50	-	-	-	-
Aroclor1221	ND	-	0.50	-	-	-	-
Aroclor1232	ND	-	0.50	-	-	-	-
Aroclor1242	ND	-	0.50	-	-	-	-
Aroclor1248	ND	-	0.50	-	-	-	-
Aroclor1254	ND	-	0.50	-	-	-	-
Aroclor1260	ND	-	0.50	-	-	-	-
PCBs, total	ND	-	0.50	-	-	-	-
Surrogate Recovery							
Decachlorobiphenyl	1.28	1.29		1.25	102	103	70-130

McCampbell Analytical, Inc.
"When Quality Counts"

1534 Willow Pass Road, Pittsburg, CA 94565-1701
Toll Free Telephone: (877) 252-9262 / Fax: (925) 252-9269
http://www.mccampbell.com / E-mail: main@mccampbell.com

Quality Control Report

Client:	AEW Engineering, Inc.	**WorkOrder:**	1602A53
Date Prepared:	2/26/16	**BatchID:**	117277
Date Analyzed:	2/26/16	**Extraction Method:**	SW5030B
Instrument:	GC10	**Analytical Method:**	SW8260B
Matrix:	Water	**Unit:**	µg/L
Project:	2015-29; Sausalito Gate 5 Characterization	**Sample ID:**	MB/LCS-117277 1602669-010BMS/MSD

QC Summary Report for SW8260B

Analyte	MB Result	LCS Result	RL	SPK Val	MB SS %REC	LCS %REC	LCS Limits
Acetone	ND	-	10	-	-	-	-
tert-Amyl methyl ether (TAME)	ND	11.8	0.50	10	-	118	54-140
Benzene	ND	11.5	0.50	10	-	115	47-158
Bromobenzene	ND	-	0.50	-	-	-	-
Bromochloromethane	ND	-	0.50	-	-	-	-
Bromodichloromethane	ND	-	0.50	-	-	-	-
Bromoform	ND	-	0.50	-	-	-	-
Bromomethane	ND	-	0.50	-	-	-	-
2-Butanone (MEK)	ND	-	2.0	-	-	-	-
t-Butyl alcohol (TBA)	ND	40.4	2.0	40	-	101	42-140
n-Butyl benzene	ND	-	0.50	-	-	-	-
sec-Butyl benzene	ND	-	0.50	-	-	-	-
tert-Butyl benzene	ND	-	0.50	-	-	-	-
Carbon Disulfide	ND	-	0.50	-	-	-	-
Carbon Tetrachloride	ND	-	0.50	-	-	-	-
Chlorobenzene	ND	11.6	0.50	10	-	116	43-157
Chloroethane	ND	-	0.50	-	-	-	-
Chloroform	ND	-	0.50	-	-	-	-
Chloromethane	ND	-	0.50	-	-	-	-
2-Chlorotoluene	ND	-	0.50	-	-	-	-
4-Chlorotoluene	ND	-	0.50	-	-	-	-
Dibromochloromethane	ND	-	0.50	-	-	-	-
1,2-Dibromo-3-chloropropane	ND	-	0.20	-	-	-	-
1,2-Dibromoethane (EDB)	ND	11.3	0.50	10	-	113	44-155
Dibromomethane	ND	-	0.50	-	-	-	-
1,2-Dichlorobenzene	ND	-	0.50	-	-	-	-
1,3-Dichlorobenzene	ND	-	0.50	-	-	-	-
1,4-Dichlorobenzene	ND	-	0.50	-	-	-	-
Dichlorodifluoromethane	ND	-	0.50	-	-	-	-
1,1-Dichloroethane	ND	-	0.50	-	-	-	-
1,2-Dichloroethane (1,2-DCA)	ND	11.1	0.50	10	-	111	66-125
1,1-Dichloroethene	ND	10.7	0.50	10	-	107	47-149
cis-1,2-Dichloroethene	ND	-	0.50	-	-	-	-
trans-1,2-Dichloroethene	ND	-	0.50	-	-	-	-
1,2-Dichloropropane	ND	-	0.50	-	-	-	-
1,3-Dichloropropane	ND	-	0.50	-	-	-	-
2,2-Dichloropropane	ND	-	0.50	-	-	-	-

(Cont.)

McCampbell Analytical, Inc.
"When Quality Counts"

1534 Willow Pass Road, Pittsburg, CA 94565-1701
Toll Free Telephone: (877) 252-9262 / Fax: (925) 252-9269
http://www.mccampbell.com / E-mail: main@mccampbell.com

Quality Control Report

Client:	AEW Engineering, Inc.	**WorkOrder:**	1602A53
Date Prepared:	2/26/16	**BatchID:**	117277
Date Analyzed:	2/26/16	**Extraction Method:**	SW5030B
Instrument:	GC10	**Analytical Method:**	SW8260B
Matrix:	Water	**Unit:**	µg/L
Project:	2015-29; Sausalito Gate 5 Characterization	**Sample ID:**	MB/LCS-117277 1602669-010BMS/MSD

QC Summary Report for SW8260B

Analyte	MB Result	LCS Result	RL	SPK Val	MB SS %REC	LCS %REC	LCS Limits
1,1-Dichloropropene	ND	-	0.50	-	-	-	-
cis-1,3-Dichloropropene	ND	-	0.50	-	-	-	-
trans-1,3-Dichloropropene	ND	-	0.50	-	-	-	-
Diisopropyl ether (DIPE)	ND	11.2	0.50	10	-	112	57-136
Ethylbenzene	ND	-	0.50	-	-	-	-
Ethyl tert-butyl ether (ETBE)	ND	11.6	0.50	10	-	116	55-137
Freon 113	ND	-	0.50	-	-	-	-
Hexachlorobutadiene	ND	-	0.50	-	-	-	-
Hexachloroethane	ND	-	0.50	-	-	-	-
2-Hexanone	ND	-	0.50	-	-	-	-
Isopropylbenzene	ND	-	0.50	-	-	-	-
4-Isopropyl toluene	ND	-	0.50	-	-	-	-
Methyl-t-butyl ether (MTBE)	ND	11.5	0.50	10	-	115	53-139
Methylene chloride	ND	-	0.50	-	-	-	-
4-Methyl-2-pentanone (MIBK)	ND	-	0.50	-	-	-	-
Naphthalene	ND	-	0.50	-	-	-	-
n-Propyl benzene	ND	-	0.50	-	-	-	-
Styrene	ND	-	0.50	-	-	-	-
1,1,1,2-Tetrachloroethane	ND	-	0.50	-	-	-	-
1,1,2,2-Tetrachloroethane	ND	-	0.50	-	-	-	-
Tetrachloroethene	ND	-	0.50	-	-	-	-
Toluene	ND	10.5	0.50	10	-	105	52-137
1,2,3-Trichlorobenzene	ND	-	0.50	-	-	-	-
1,2,4-Trichlorobenzene	ND	-	0.50	-	-	-	-
1,1,1-Trichloroethane	ND	-	0.50	-	-	-	-
1,1,2-Trichloroethane	ND	-	0.50	-	-	-	-
Trichloroethene	ND	12.1	0.50	10	-	121	43-157
Trichlorofluoromethane	ND	-	0.50	-	-	-	-
1,2,3-Trichloropropane	ND	-	0.50	-	-	-	-
1,2,4-Trimethylbenzene	ND	-	0.50	-	-	-	-
1,3,5-Trimethylbenzene	ND	-	0.50	-	-	-	-
Vinyl Chloride	ND	-	0.50	-	-	-	-
Xylenes, Total	ND	-	0.50	-	-	-	-

(Cont.)

McCampbell Analytical, Inc.
"When Quality Counts"

1534 Willow Pass Road, Pittsburg, CA 94565-1701
Toll Free Telephone: (877) 252-9262 / Fax: (925) 252-9269
http://www.mccampbell.com / E-mail: main@mccampbell.com

Quality Control Report

Client:	AEW Engineering, Inc.	**WorkOrder:**	1602A53
Date Prepared:	2/26/16	**BatchID:**	117277
Date Analyzed:	2/26/16	**Extraction Method:**	SW5030B
Instrument:	GC10	**Analytical Method:**	SW8260B
Matrix:	Water	**Unit:**	µg/L
Project:	2015-29; Sausalito Gate 5 Characterization	**Sample ID:**	MB/LCS-117277 1602669-010BMS/MSD

QC Summary Report for SW8260B

Analyte	MB Result	LCS Result	RL	SPK Val	MB SS %REC	LCS %REC	LCS Limits
Surrogate Recovery							
Dibromofluoromethane	27.8	27.9		25	111	112	70-130
Toluene-d8	27.8	27.5		25	111	110	70-130
4-BFB	2.07	2.20		2.5	83	88	70-130

Analyte	MS Result	MSD Result	SPK Val	SPKRef Val	MS %REC	MSD %REC	MS/MSD Limits	RPD	RPD Limit
tert-Amyl methyl ether (TAME)	11.5	11.8	10	ND	115	118	69-139	2.85	20
Benzene	10.7	11.0	10	ND	107	110	69-141	2.68	20
t-Butyl alcohol (TBA)	42.1	44.2	40	ND	105	111	41-152	4.83	20
Chlorobenzene	11.0	11.3	10	ND	110	113	77-120	2.46	20
1,2-Dibromoethane (EDB)	11.5	11.8	10	ND	115	118	76-135	2.19	20
1,2-Dichloroethane (1,2-DCA)	10.5	10.8	10	ND	105	108	73-139	2.65	20
1,1-Dichloroethene	9.53	10.2	10	ND	95	102	59-140	6.41	20
Diisopropyl ether (DIPE)	10.7	11.0	10	ND	107	110	72-140	2.21	20
Ethyl tert-butyl ether (ETBE)	11.1	11.4	10	ND	111	114	71-140	3.05	20
Methyl-t-butyl ether (MTBE)	11.2	11.6	10	ND	112	116	73-139	3.72	20
Toluene	9.84	10.0	10	ND	98	100	71-128	1.73	20
Trichloroethene	11.2	11.5	10	ND	112	115	64-132	3.05	20
Surrogate Recovery									
Dibromofluoromethane	27.2	27.6	25		109	110	73-131	1.21	20
Toluene-d8	27.5	27.3	25		110	109	72-117	0.414	20
4-BFB	2.14	2.17	2.5		85	87	74-116	1.53	20

McCampbell Analytical, Inc.
"When Quality Counts"

1534 Willow Pass Road, Pittsburg, CA 94565-1701
Toll Free Telephone: (877) 252-9262 / Fax: (925) 252-9269
http://www.mccampbell.com / E-mail: main@mccampbell.com

Quality Control Report

Client:	AEW Engineering, Inc.	**WorkOrder:**	1602A53
Date Prepared:	2/26/16	**BatchID:**	117318
Date Analyzed:	2/26/16	**Extraction Method:**	E625
Instrument:	GC17	**Analytical Method:**	SW8270C
Matrix:	Water	**Unit:**	µg/L
Project:	2015-29; Sausalito Gate 5 Characterization	**Sample ID:**	MB/LCS-117318

QC Summary Report for SW8270C

Analyte	MB Result	LCS Result	RL	SPK Val	MB SS %REC	LCS %REC	LCS Limits
Acenaphthene	ND	16.5	1.0	20	-	82	47-145
Acenaphthylene	ND	-	1.0	-	-	-	-
Anthracene	ND	-	1.0	-	-	-	-
Benzidine	ND	-	5.0	-	-	-	-
Benzo (a) anthracene	ND	-	1.0	-	-	-	-
Benzo (a) pyrene	ND	-	1.0	-	-	-	-
Benzo (b) fluoranthene	ND	-	1.0	-	-	-	-
Benzo (g,h,i) perylene	ND	-	1.0	-	-	-	-
Benzo (k) fluoranthene	ND	-	1.0	-	-	-	-
Benzyl Alcohol	ND	-	5.0	-	-	-	-
Bis (2-chloroethoxy) Methane	ND	-	1.0	-	-	-	-
Bis (2-chloroethyl) Ether	ND	-	1.0	-	-	-	-
Bis (2-chloroisopropyl) Ether	ND	-	1.0	-	-	-	-
Bis (2-ethylhexyl) Adipate	ND	-	1.0	-	-	-	-
Bis (2-ethylhexyl) Phthalate	ND	-	2.0	-	-	-	-
4-Bromophenyl Phenyl Ether	ND	-	1.0	-	-	-	-
Butylbenzyl Phthalate	ND	-	1.0	-	-	-	-
4-Chloroaniline	ND	-	2.0	-	-	-	-
4-Chloro-3-methylphenol	ND	18.7	1.0	20	-	94	22-147
2-Chloronaphthalene	ND	-	1.0	-	-	-	-
2-Chlorophenol	ND	17.4	1.0	20	-	87	23-134
4-Chlorophenyl Phenyl Ether	ND	-	1.0	-	-	-	-
Chrysene	ND	-	1.0	-	-	-	-
Dibenzo (a,h) anthracene	ND	-	1.0	-	-	-	-
Dibenzofuran	ND	-	1.0	-	-	-	-
Di-n-butyl Phthalate	ND	-	1.0	-	-	-	-
1,2-Dichlorobenzene	ND	-	1.0	-	-	-	-
1,3-Dichlorobenzene	ND	-	1.0	-	-	-	-
1,4-Dichlorobenzene	ND	16.4	1.0	20	-	82	20-124
3,3-Dichlorobenzidine	ND	-	2.0	-	-	-	-
2,4-Dichlorophenol	ND	-	1.0	-	-	-	-
Diethyl Phthalate	ND	-	1.0	-	-	-	-
2,4-Dimethylphenol	ND	-	1.0	-	-	-	-
Dimethyl Phthalate	ND	-	1.0	-	-	-	-
4,6-Dinitro-2-methylphenol	ND	-	5.0	-	-	-	-
2,4-Dinitrophenol	ND	-	5.0	-	-	-	-
2,4-Dinitrotoluene	ND	16.8	1.0	20	-	84	39-139

(Cont.)

McCampbell Analytical, Inc.
"When Quality Counts"

1534 Willow Pass Road, Pittsburg, CA 94565-1701
Toll Free Telephone: (877) 252-9262 / Fax: (925) 252-9269
http://www.mccampbell.com / E-mail: main@mccampbell.com

Quality Control Report

Client:	AEW Engineering, Inc.	**WorkOrder:**	1602A53
Date Prepared:	2/26/16	**BatchID:**	117318
Date Analyzed:	2/26/16	**Extraction Method:**	E625
Instrument:	GC17	**Analytical Method:**	SW8270C
Matrix:	Water	**Unit:**	µg/L
Project:	2015-29; Sausalito Gate 5 Characterization	**Sample ID:**	MB/LCS-117318

QC Summary Report for SW8270C

Analyte	MB Result	LCS Result	RL	SPK Val	MB SS %REC	LCS %REC	LCS Limits
2,6-Dinitrotoluene	ND	-	1.0	-	-	-	-
Di-n-octyl Phthalate	ND	-	2.0	-	-	-	-
1,2-Diphenylhydrazine	ND	-	1.0	-	-	-	-
Fluoranthene	ND	-	1.0	-	-	-	-
Fluorene	ND	-	1.0	-	-	-	-
Hexachlorobenzene	ND	-	1.0	-	-	-	-
Hexachlorobutadiene	ND	-	1.0	-	-	-	-
Hexachlorocyclopentadiene	ND	-	5.0	-	-	-	-
Hexachloroethane	ND	-	1.0	-	-	-	-
Indeno (1,2,3-cd) pyrene	ND	-	1.0	-	-	-	-
Isophorone	ND	-	1.0	-	-	-	-
2-Methylnaphthalene	ND	-	1.0	-	-	-	-
2-Methylphenol (o-cresol)	ND	-	1.0	-	-	-	-
3 & 4-Methylphenol (m,p-Cresol)	ND	-	1.0	-	-	-	-
Naphthalene	ND	-	1.0	-	-	-	-
2-Nitroaniline	ND	-	5.0	-	-	-	-
3-Nitroaniline	ND	-	5.0	-	-	-	-
4-Nitroaniline	ND	-	5.0	-	-	-	-
Nitrobenzene	ND	-	1.0	-	-	-	-
2-Nitrophenol	ND	-	5.0	-	-	-	-
4-Nitrophenol	ND	102	5.0	100	-	102	0-132
N-Nitrosodimethylamine	ND	-	5.0	-	-	-	-
N-Nitrosodiphenylamine	ND	-	1.0	-	-	-	-
N-Nitrosodi-n-propylamine	ND	16.9	1.0	20	-	84	0-230
Pentachlorophenol	ND	39.8	5.0	40	-	99	14-176
Phenanthrene	ND	-	1.0	-	-	-	-
Phenol	ND	18.2	1.0	20	-	91	5-112
Pyrene	ND	17.7	1.0	20	-	89	52-115
1,2,4-Trichlorobenzene	ND	16.4	1.0	20	-	82	44-142
2,4,5-Trichlorophenol	ND	-	1.0	-	-	-	-
2,4,6-Trichlorophenol	ND	-	1.0	-	-	-	-

(Cont.)

McCampbell Analytical, Inc.
"When Quality Counts"

1534 Willow Pass Road, Pittsburg, CA 94565-1701
Toll Free Telephone: (877) 252-9262 / Fax: (925) 252-9269
http://www.mccampbell.com / E-mail: main@mccampbell.com

Quality Control Report

Client:	AEW Engineering, Inc.	**WorkOrder:**	1602A53
Date Prepared:	2/26/16	**BatchID:**	117318
Date Analyzed:	2/26/16	**Extraction Method:**	E625
Instrument:	GC17	**Analytical Method:**	SW8270C
Matrix:	Water	**Unit:**	µg/L
Project:	2015-29; Sausalito Gate 5 Characterization	**Sample ID:**	MB/LCS-117318

QC Summary Report for SW8270C

Analyte	MB Result	LCS Result	RL	SPK Val	MB SS %REC	LCS %REC	LCS Limits
Surrogate Recovery							
2-Fluorophenol	21.3	19.6		20	107	98	8-130
Phenol-d5	22.8	21.9		20	114	110	5-130
Nitrobenzene-d5	20.0	20.7		20	100	104	20-140
2-Fluorobiphenyl	19.5	19.9		20	98	100	40-140
2,4,6-Tribromophenol	28.2	26.3		20	141	131	16-180
Terphenyl-d14	22.1	21.9		20	110	109	40-170

McCampbell Analytical, Inc.
"When Quality Counts"

1534 Willow Pass Road, Pittsburg, CA 94565-1701
Toll Free Telephone: (877) 252-9262 / Fax: (925) 252-9269
http://www.mccampbell.com / E-mail: main@mccampbell.com

Quality Control Report

Client:	AEW Engineering, Inc.	**WorkOrder:**	1602A53
Date Prepared:	2/25/16	**BatchID:**	117231
Date Analyzed:	2/25/16 - 2/26/16	**Extraction Method:**	E200.8
Instrument:	ICP-MS3	**Analytical Method:**	E200.8
Matrix:	Water	**Unit:**	µg/L
Project:	2015-29; Sausalito Gate 5 Characterization	**Sample ID:**	MB/LCS-117231 1602A32-003BMS/MSD

QC Summary Report for Dissolved Metals

Analyte	MB Result	LCS Result	RL	SPK Val	MB SS %REC	LCS %REC	LCS Limits
Antimony	ND	44.3	0.50	50	-	89	85-115
Arsenic	ND	47.5	0.50	50	-	95	85-115
Barium	ND	504	5.0	500	-	101	85-115
Beryllium	ND	45.6	0.50	50	-	91	85-115
Cadmium	ND	46.5	0.25	50	-	93	85-115
Chromium	ND	47.9	0.50	50	-	96	85-115
Cobalt	ND	44.0	0.50	50	-	88	85-115
Copper	ND	50.0	2.0	50	-	100	85-115
Lead	ND	44.5	0.50	50	-	89	85-115
Mercury	ND	1.14	0.025	1.25	-	91	85-115
Molybdenum	ND	44.2	0.50	50	-	88	85-115
Nickel	ND	48.9	0.50	50	-	98	85-115
Selenium	ND	47.4	0.50	50	-	95	85-115
Silver	ND	44.1	0.19	50	-	88	85-115
Thallium	ND	42.4	0.50	50	-	85	85-115
Vanadium	ND	47.5	0.50	50	-	95	85-115
Zinc	ND	489	15	500	-	98	85-115

(Cont.)

McCampbell Analytical, Inc.
"When Quality Counts"

1534 Willow Pass Road, Pittsburg, CA 94565-1701
Toll Free Telephone: (877) 252-9262 / Fax: (925) 252-9269
http://www.mccampbell.com / E-mail: main@mccampbell.com

Quality Control Report

Client:	AEW Engineering, Inc.	**WorkOrder:**	1602A53
Date Prepared:	2/25/16	**BatchID:**	117231
Date Analyzed:	2/25/16 - 2/26/16	**Extraction Method:**	E200.8
Instrument:	ICP-MS3	**Analytical Method:**	E200.8
Matrix:	Water	**Unit:**	µg/L
Project:	2015-29; Sausalito Gate 5 Characterization	**Sample ID:**	MB/LCS-117231 1602A32-003BMS/MSD

QC Summary Report for Dissolved Metals

Analyte	MS Result	MSD Result	SPK Val	SPKRef Val	MS %REC	MSD %REC	MS/MSD Limits	RPD	RPD Limit
Antimony	46.1	47.7	50	ND	92	95	70-130	3.45	20
Arsenic	52.8	52.3	50	3.9	98	97	70-130	0.952	20
Barium	802	808	500	290	102	103	70-130	0.795	20
Beryllium	48.9	49.9	50	ND	98	100	70-130	1.94	20
Cadmium	47.3	46.4	50	ND	95	93	70-130	1.81	20
Chromium	46.7	46.2	50	0.75	92	91	70-130	1.05	20
Cobalt	43.4	44.2	50	ND	86	88	70-130	1.85	20
Copper	49.8	49.6	50	ND	96	95	70-130	0.584	20
Lead	46.5	48.5	50	ND	92	96	70-130	4.27	20
Mercury	1.43	1.34	1.25	0.075	108	101	70-130	5.99	20
Molybdenum	39.8	43.6	50	2.4	75	82	70-130	9.11	20
Nickel	51.0	50.2	50	3.3	96	94	70-130	1.60	20
Selenium	48.2	47.0	50	ND	96	93	70-130	2.46	20
Silver	42.4	43.8	50	ND	85	88	70-130	3.36	20
Thallium	46.1	48.3	50	ND	92	97	70-130	4.62	20
Vanadium	55.0	54.5	50	8.0	94	93	70-130	1.04	20
Zinc	562	548	500	70	98	96	70-130	2.36	20

McCampbell Analytical, Inc.
"When Quality Counts"

1534 Willow Pass Road, Pittsburg, CA 94565-1701
Toll Free Telephone: (877) 252-9262 / Fax: (925) 252-9269
http://www.mccampbell.com / E-mail: main@mccampbell.com

Quality Control Report

Client:	AEW Engineering, Inc.	**WorkOrder:**	1602A53
Date Prepared:	2/29/16	**BatchID:**	117335
Date Analyzed:	2/29/16	**Extraction Method:**	E200.8
Instrument:	ICP-MS2	**Analytical Method:**	E200.8
Matrix:	Water	**Unit:**	µg/L
Project:	2015-29; Sausalito Gate 5 Characterization	**Sample ID:**	MB/LCS-117335 1602A96-001AMS/MSD 1602A96-001APDS

QC Summary Report for Metals

Analyte	MB Result	LCS Result	RL	SPK Val	MB SS %REC	LCS %REC	LCS Limits
Antimony	ND	53.9	0.50	50	-	108	85-115
Arsenic	ND	53.9	0.50	50	-	108	85-115
Barium	ND	554	5.0	500	-	111	85-115
Beryllium	ND	53.1	0.50	50	-	106	85-115
Cadmium	ND	53.4	0.25	50	-	107	85-115
Chromium	ND	54.0	0.50	50	-	108	85-115
Cobalt	ND	54.6	0.50	50	-	109	85-115
Copper	ND	53.6	2.0	50	-	107	85-115
Lead	ND	53.7	0.50	50	-	107	85-115
Mercury	ND	1.30	0.025	1.25	-	104	85-115
Molybdenum	ND	51.6	0.50	50	-	103	85-115
Nickel	ND	52.5	0.50	50	-	105	85-115
Selenium	ND	54.9	0.50	50	-	110	85-115
Silver	ND	52.7	0.19	50	-	105	85-115
Thallium	ND	56.4	0.50	50	-	113	85-115
Vanadium	ND	53.4	0.50	50	-	107	85-115
Zinc	ND	545	15	500	-	109	85-115
Surrogate Recovery							
Terbium	720	737		750	96	98	70-130

(Cont.)

CDPH ELAP 1644 ♦ NELAP 4033ORELAP

SH QA/QC Officer

McCampbell Analytical, Inc.
"When Quality Counts"

1534 Willow Pass Road, Pittsburg, CA 94565-1701
Toll Free Telephone: (877) 252-9262 / Fax: (925) 252-9269
http://www.mccampbell.com / E-mail: main@mccampbell.com

Quality Control Report

Client:	AEW Engineering, Inc.	**WorkOrder:**	1602A53
Date Prepared:	2/29/16	**BatchID:**	117335
Date Analyzed:	2/29/16	**Extraction Method:**	E200.8
Instrument:	ICP-MS2	**Analytical Method:**	E200.8
Matrix:	Water	**Unit:**	µg/L
Project:	2015-29; Sausalito Gate 5 Characterization	**Sample ID:**	MB/LCS-117335 1602A96-001AMS/MSD 1602A96-001APDS

QC Summary Report for Metals

Analyte	MS Result	MSD Result	SPK Val	SPKRef Val	MS %REC	MSD %REC	MS/MSD Limits	RPD	RPD Limit
Antimony	57.1	55.5	50	0.9175	112	109	70-130	2.81	20
Arsenic	57.3	56.2	50	2.238	110	108	70-130	1.81	20
Barium	620	613	500	56.54	113	111	70-130	1.20	20
Beryllium	54.2	53.5	50	ND	108	107	70-130	1.28	20
Cadmium	53.0	51.0	50	3.370	99	95	70-130	3.93	20
Chromium	50.7	49.6	50	1.408	99	96	70-130	2.21	20
Cobalt	56.4	55.2	50	5.219	102	100	70-130	2.15	20
Copper	160	152	50	166.0	0,F8	0,F8	70-130	NA	20
Lead	64.0	63.5	50	13.96	100	99	70-130	0.832	20
Mercury	1.51	1.45	1.25	ND	112	108	70-130	3.71	20
Molybdenum	73.2	72.1	50	18.41	110	107	70-130	1.50	20
Nickel	349	344	50	297.9	102	91	70-130	1.56	20
Selenium	54.2	54.6	50	0.5150	107	108	70-130	0.771	20
Silver	49.0	48.1	50	ND	98	96	70-130	1.73	20
Thallium	55.2	54.0	50	ND	110	108	70-130	2.20	20
Vanadium	59.3	57.1	50	8.842	101	97	70-130	3.75	20
Zinc	6570	6520	500	6100	91	80	70-130	0.902	20
Surrogate Recovery									
Terbium	759	747	750		101	100	70-130	1.57	20

Analyte	PDS Result	SPK Val	SPKRef Val	PDS %REC	PDS Limits
Copper	198	50	166.0	64	80-120

Analyte	DLT Result	DLTRef Val	RPD	RPD Limit
Copper	198	166.0	17.4	10

McCampbell Analytical, Inc.
"When Quality Counts"

1534 Willow Pass Road, Pittsburg, CA 94565-1701
Toll Free Telephone: (877) 252-9262 / Fax: (925) 252-9269
http://www.mccampbell.com / E-mail: main@mccampbell.com

Quality Control Report

Client:	AEW Engineering, Inc.	**WorkOrder:**	1602A53
Date Prepared:	2/29/16	**BatchID:**	117392
Date Analyzed:	2/29/16	**Extraction Method:**	SM5220 D-1997
Instrument:	SPECTROPHOTOMETER	**Analytical Method:**	SM5220 D-1997
Matrix:	Water	**Unit:**	mg/L
Project:	2015-29; Sausalito Gate 5 Characterization	**Sample ID:**	MB/LCS-117392 1602958-001BMS/MSD

QC Summary Report for COD

Analyte	MB Result	LCS Result	RL	SPK Val	MB SS %REC	LCS %REC	LCS Limits
COD	ND	394	10	400	-	98	90-110

Analyte	MS Result	MSD Result	SPK Val	SPKRef Val	MS %REC	MSD %REC	MS/MSD Limits	RPD	RPD Limit
COD	413	416	400	17.22	99	100	80-120	0.593	20

McCampbell Analytical, Inc.
"When Quality Counts"

1534 Willow Pass Road, Pittsburg, CA 94565-1701
Toll Free Telephone: (877) 252-9262 / Fax: (925) 252-9269
http://www.mccampbell.com / E-mail: main@mccampbell.com

Quality Control Report

Client:	AEW Engineering, Inc.	**WorkOrder:**	1602A53
Date Prepared:	2/29/16	**BatchID:**	117339
Date Analyzed:	2/26/16	**Extraction Method:**	SW5030B
Instrument:	GC3	**Analytical Method:**	SW8021B/8015Bm
Matrix:	Water	**Unit:**	µg/L
Project:	2015-29; Sausalito Gate 5 Characterization	**Sample ID:**	MB/LCS-117339 1602937-001BMS/MSD

QC Summary Report for SW8021B/8015Bm

Analyte	MB Result	LCS Result	RL	SPK Val	MB SS %REC	LCS %REC	LCS Limits
TPH(btex)	ND	56.5	40	60	-	94	70-130
MTBE	ND	8.64	5.0	10	-	86	70-130
Benzene	ND	8.86	0.50	10	-	89	70-130
Toluene	ND	8.97	0.50	10	-	90	70-130
Ethylbenzene	ND	9.15	0.50	10	-	91	70-130
Xylenes	ND	27.7	1.5	30	-	92	70-130
Surrogate Recovery							
aaa-TFT	9.73	9.68		10	97	97	70-130

Analyte	MS Result	MSD Result	SPK Val	SPKRef Val	MS %REC	MSD %REC	MS/MSD Limits	RPD	RPD Limit
TPH(btex)	57.0	59.1	60	ND	95	99	70-130	0	20
MTBE	8.82	9.48	10	ND	88	95	70-130	0	20
Benzene	9.79	9.72	10	ND	98	97	70-130	0	20
Toluene	10.1	10.1	10	ND	101	101	70-130	0	20
Ethylbenzene	10.1	10.2	10	ND	101	101	70-130	0	20
Xylenes	30.3	30.7	30	ND	101	102	70-130	0	20
Surrogate Recovery									
aaa-TFT	10.2	10.1	10		102	101	70-130	0	20

McCampbell Analytical, Inc.
"When Quality Counts"

1534 Willow Pass Road, Pittsburg, CA 94565-1701
Toll Free Telephone: (877) 252-9262 / Fax: (925) 252-9269
http://www.mccampbell.com / E-mail: main@mccampbell.com

Quality Control Report

Client:	AEW Engineering, Inc.	**WorkOrder:**	1602A53
Date Prepared:	2/24/16	**BatchID:**	117201
Date Analyzed:	2/25/16	**Extraction Method:**	SW3510C/3630C
Instrument:	GC39A, GC39B	**Analytical Method:**	SW8015B
Matrix:	Water	**Unit:**	µg/L
Project:	2015-29; Sausalito Gate 5 Characterization	**Sample ID:**	MB/LCS-117201

QC Report for SW8015B w/ SG Clean-Up

Analyte	MB Result	LCS Result	RL	SPK Val	MB SS %REC	LCS %REC	LCS Limits
TPH-Diesel (C10-C23)	ND	869	50	1000	-	87	59-151
TPH-Motor Oil (C18-C36)	ND	-	250	-	-	-	-
Surrogate Recovery							
C9	633	644		625	101	103	65-122

McCampbell Analytical, Inc.
"When Quality Counts"

1534 Willow Pass Road, Pittsburg, CA 94565-1701
Toll Free Telephone: (877) 252-9262 / Fax: (925) 252-9269
http://www.mccampbell.com / E-mail: main@mccampbell.com

Quality Control Report

Client:	AEW Engineering, Inc.	**WorkOrder:**	1602A53
Date Prepared:	2/26/16	**BatchID:**	117303
Date Analyzed:	2/26/16	**Extraction Method:**	SM2540 D-1997
Instrument:	WetChem	**Analytical Method:**	SM2540 D-1997
Matrix:	Water	**Unit:**	mg/L
Project:	2015-29; Sausalito Gate 5 Characterization		

QC Summary Report for Total Suspended Solids

SampID	Sample Result	Sample DF	Dup / Serial Dilution Result	Dup / Serial Dilution DF	RPD	Acceptance Criteria (%)
1602A49-001B	ND	1	ND<2.00	2	N/A	<15

McCampbell Analytical, Inc.
1534 Willow Pass Rd
Pittsburg, CA 94565-1701
(925) 252-9262

CHAIN-OF-CUSTODY RECORD

WorkOrder: 1602A53 **ClientCode: AEW**

☐ WaterTrax ☐ WriteOn ☐ EDF ☑ Excel ☐ EQuIS ☑ Email ☑ HardCopy ☐ ThirdParty ☐ J-flag

Report to:
Randy Young
AEW Engineering, Inc.
55 New Montgomery St, Ste 722
San Francisco, CA 94105
(415) 495-8401 FAX: (415) 358-5598

Email: ryoung@aewengineering.com
cc/3rd Party: rmusselman@aewengineering.com;
PO:
ProjectNo: 2015-29; Sausalito Gate 5 Characterization

Bill to:
Kenneth Leung
AEW Engineering, Inc.
55 New Montgomery St, Ste 507
San Francisco, CA 94105
kleung@aewengineering.com; byeung

Requested TAT: 5 days;

Date Received: 02/25/2016
Date Logged: 02/25/2016

Lab ID	Client ID	Matrix	Collection Date	Hold	Requested Tests (See legend below) 1	2	3	4	5	6	7	8	9	10	11	12
1602A53-001	AEW- B11 GW	Water	2/25/2016 9:30	☐	J	E	C	D	G	F	I	A	G	B	H	

Test Legend:

1	1664A_SG_W	2	8081PCB_W	3	8260B_W	4	8270_ESL_W
5	CAM17MS_DISS	6	CAM17MS_TTLC_W	7	COD_W	8	G-MBTEX_W
9	PRDISSOLVED	10	TPH(DMO)WSG_W	11	TSS_W	12	

Project Manager:

Prepared by: Briana Cutino

Comments: Hold all soil samples for 6mos per Ken Leung 3/14/14

NOTE: Soil samples are discarded 60 days after results are reported unless other arrangements are made (Water samples are 30 days).
Hazardous samples will be returned to client or disposed of at client expense.

McCampbell Analytical, Inc.
"When Quality Counts"

1534 Willow Pass Road, Pittsburg, CA 94565-1701
Toll Free Telephone: (877) 252-9262 / Fax: (925) 252-9269
http://www.mccampbell.com / E-mail: main@mccampbell.com

WORK ORDER SUMMARY

Client Name: AEW ENGINEERING, INC.
QC Level: LEVEL 2
Work Order: 1602A53
Project: 2015-29; Sausalito Gate 5 Characterization
Client Contact: Randy Young
Date Logged: 2/25/2016
Comments: Hold all soil samples for 6mos per Ken Leung 3/14/14
Contact's Email: ryoung@aewengineering.com

☐ WaterTrax ☐ WriteOn ☐ EDF ☑ Excel ☐ Fax ☑ Email ☑ HardCopy ☐ ThirdParty ☐ J-flag

Lab ID	Client ID	Matrix	Test Name	Containers /Composites	Bottle & Preservative	De-chlorinated	Collection Date & Time	TAT	Sediment Content	Hold	SubOut
1602A53-001A	AEW- B11 GW	Water	SW8021B/8015Bm (G/MBTEX)	2	VOA w/ HCl	☐	2/25/2016 9:30	5 days	5%+	☐	
1602A53-001B	AEW- B11 GW	Water	SW8015B (TPH-d,mo w/ S.G. Clean-Up)	2	aVOA	☐	2/25/2016 9:30	5 days	5%+	☐	
1602A53-001C	AEW- B11 GW	Water	SW8260B (VOCs)	2	VOA w/ HCl	☐	2/25/2016 9:30	5 days	5%+	☐	
1602A53-001D	AEW- B11 GW	Water	SW8270C (SVOCs)	1	1LA	☐	2/25/2016 9:30	5 days	5%+	☐	
1602A53-001E	AEW- B11 GW	Water	SW8081A/8082 (OC Pesticides+PCBs)	2	aVOA	☐	2/25/2016 9:30	5 days	5%+	☐	
1602A53-001F	AEW- B11 GW	Water	E200.8 (CAM 17)	1	250mL HDPE w/ HNO3	☐	2/25/2016 9:30	5 days	5%+	☐	
1602A53-001G	AEW- B11 GW	Water	E200.8 (CAM 17) (Dissolved-Lab Filtered)	1	250mL HDPE, unprsv.	☐	2/25/2016 9:30	5 days	5%+	☐	
1602A53-001H	AEW- B11 GW	Water	SM2540D (TSS)	1	1L HDPE, unprsv.	☐	2/25/2016 9:30	5 days	5%+	☐	
1602A53-001I	AEW- B11 GW	Water	SM5220D (COD)	2	aVOA w/ H2SO4	☐	2/25/2016 9:30	5 days	5%+	☐	
1602A53-001J	AEW- B11 GW	Water	E1664A (SGT- HEM; Non-polar Material)	2	1LA w/ HCl	☐	2/25/2016 9:30	5 days	5%+	☐	

NOTES: - STLC and TCLP extractions require 2 days to complete; therefore, all TATs begin after the extraction is completed (i.e., One-day TAT yields results in 3 days from sample submission).

- MAI assumes that all material present in the provided sampling container is considered part of the sample - MAI does not exclude any material from the sample prior to sample preparation unless requested in writing by the client.

1602A53

AEW ENGINEERING, INC.

55 New Montgomery Street, Suite 722, San Francisco, CA 94105

Telephone: (415) 495-8422 Fax: (415) 358-5598

CHAIN OF CUSTODY RECORD

Page 1 of 1

TURN AROUND TIME: ☐ 24 HOURS ☐ 48 HOURS ☐ 1 WEEK ☒ Normal Others:

LABORATORY: McCampbell Analytical

Date: 2/25/16

Report To: Randall Young, Ryder Musselman eMail: ryoung@aewengineering.com

Company: AEW Engineering, Inc. eMail: rmusselman@aewengineering.com

Project Name: Sausalito Gate 5 Characterization Location: Sausalito

Sampler: Randall Young, Ryder Musselman Project No.: 2015-29

Sampler: Signature: Bill To: Kenneth Leung

Reporting Requirement: Hard Copy : Yes ☑ No ☐

PDF File: Yes ☑ No ☐ EXCEL Yes ☑ No ☐

SAMPLE ID	LOCATION	Sampling Date	Sampling Time	# of Containers	Type of Container	Matrix: Water	Soil	Air	Sludge	Other	Method Perserved: Ice	HCl	HNO_3	Other	TPH - Gas, BTEX,& MTBE (EPA 8015 Mod)	TPH-Diesel and Motor Oil w/Silica Gel (EPA 8015 Mod)	VOCs (EPA 8260)	SVOCs (EPA 8270) WITH FLORISIL CLEANUP*	Pesticides (8081/8082) WITH FLORISIL CLEANUP*	PCBs (8081/8082) WITH FLORISIL CLEANUP*	Title 22 Metals (EPA 6000/7000) TOTAL	Title 22 metals DISSOLVED*	Total suspended solids (SM 2540D)	COD (SM 5220D)	Oil & Grease (EPA 1664)	Other	Comments
AEW-B11 GW	GATE 5 RD.	2/25/16	9:30	15	various	X					X	X	X	X	X	X	X	X		X	X	X	X	X	X		

Relinquished By:	Date:	Time:	Received By:
	2/25/16	11:55	
	2-25-16	1520	

*Need to achieve ESLs. Please run all applicable clean-ups to achieve ESLs. Please do not dilute samples. Please contact Randall Young @ (415) 495-8401 if you have any questions. Please hold all samples for 6 months for further analysis.

* PLEASE FILTER & PRESERVE FOR DISSOLVED METALS

McCampbell Analytical, Inc.
"When Quality Counts"

1534 Willow Pass Road, Pittsburg, CA 94565-1701
Toll Free Telephone: (877) 252-9262 / Fax: (925) 252-9269
http://www.mccampbell.com / E-mail: main@mccampbell.com

Sample Receipt Checklist

Client Name:	**AEW Engineering, Inc.**	Date and Time Received:	**2/25/2016 15:20**
Project Name:	**2015-29; Sausalito Gate 5 Characterization**	Date Logged:	**2/25/2016**
WorkOrder №:	**1602A53** Matrix: Water	Received by:	Briana Cutino
Carrier:	Bernie Cummins (MAI Courier)	Logged by:	Briana Cutino

Chain of Custody (COC) Information

Chain of custody present?	Yes ☑	No ☐
Chain of custody signed when relinquished and received?	Yes ☑	No ☐
Chain of custody agrees with sample labels?	Yes ☑	No ☐
Sample IDs noted by Client on COC?	Yes ☑	No ☐
Date and Time of collection noted by Client on COC?	Yes ☑	No ☐
Sampler's name noted on COC?	Yes ☑	No ☐

Sample Receipt Information

Custody seals intact on shipping container/cooler?	Yes ☐	No ☐	NA ☑
Shipping container/cooler in good condition?	Yes ☑	No ☐	
Samples in proper containers/bottles?	Yes ☑	No ☐	
Sample containers intact?	Yes ☑	No ☐	
Sufficient sample volume for indicated test?	Yes ☑	No ☐	

Sample Preservation and Hold Time (HT) Information

All samples received within holding time?	Yes ☑	No ☐	
Sample/Temp Blank temperature	Temp: 1.6°C		NA ☐
Water - VOA vials have zero headspace / no bubbles?	Yes ☑	No ☐	NA ☐
Sample labels checked for correct preservation?	Yes ☑	No ☐	
pH acceptable upon receipt (Metal: <2; 522: <4; 218.7: >8)?	Yes ☐	No ☑	NA ☐
Samples Received on Ice?	Yes ☑	No ☐	
	(Ice Type: WET ICE)		

UCMR3 Samples:

Total Chlorine tested and acceptable upon receipt for EPA 522?	Yes ☐	No ☐	NA ☑
Free Chlorine tested and acceptable upon receipt for EPA 218.7, 300.1, 537, 539?	Yes ☐	No ☐	NA ☑

** NOTE: If the "No" box is checked, see comments below.*

Comments: pH adjusted in Lab.

APPENDIX G

Uniform Standards All Cities and County of Marin

1. EXISTING CONCRETE SHALL BE REMOVED AT EXPANSION OR WEAKENED PLANE JOINTS OR AT SAWCUTS AS FIELD MARKED BY AGENCY ENGINEER. SAWCUTS MUST GO ENTIRELY THROUGH CONCRETE.

2. FOR NEW DEVELOPMENT, NO UTILITY BOXES OR POLES WILL BE PERMITTED IN THE SIDEWALK AREA WITHOUT THE PRIOR WRITTEN APPROVAL OF THE AGENCY ENGINEER.

3. WHERE UNDERCUT SUBGRADE OR UNSUITABLE SUBGRADE MATERIAL IS ENCOUNTERED, THE AGENCY ENGINEER MAY REQUIRE REMEDIAL WORK TO BE DONE, INCLUDING OVER EXCAVATION AND BACKFILLING WITH CRUSHED ROCK AND, WHEN DIRECTED BY THE ENGINEER, PLACING GEOTEXTILE FABRIC BENEATH THE NEW CONCRETE SECTION.

4. SUBGRADE SHALL BE COMPACTED TO AT LEAST 95% RELATIVE COMPACTION IN THE TOP SIX INCHES.

5. NEW WORK SHALL MATCH EXISTING AS CLOSELY AS POSSIBLE IN FINISH, SCORING AND COLOR. FOR NEW INSTALLATIONS PLACED ADJACENT TO EXISTING, 2LB. DAVIS BLACK #8084 (OR EQUIVALENT) PER CU. YD. CONCRETE SHALL BE ADDED TO MIX.

6. EXCEPT WHERE SPECIFIED OTHERWISE HEREIN, NO ADMIXTURES SHALL BE USED WITHOUT THE PERMISSION OF THE AGENCY ENGINEER.

7. FORMS SHALL MEET GRADE AND FORM FACES SHALL NOT VARY FROM THE DIMENSIONS SHOWN BY MORE THAN 1/2 INCH.

8. NO CONCRETE SHALL BE PLACED UNTIL THE AGENCY ENGINEER HAS INSPECTED AND APPROVED FORMS AND SUBGRADE/BASE.

9. SUBGRADE/BASE SHALL BE THOROUGHLY WETTED IMMEDIATELY PRIOR TO PLACING CONCRETE.

10. CONCRETE SHALL BE A MINIMUM CLASS B (5 SACK MIX) WITH 1 INCH MAXIMUM AGGREGATE FROM AN APPROVED MIXING PLANT. NO BAGGED MIX IS PERMITTED.

11. CONCRETE SHALL HAVE A SLUMP OF NOT MORE THAN FOUR INCHES.

12. FOR SIDEWALKS AND DRIVEWAY APPROACHES, 1/4 INCH DEEP SCORE LINES SHALL BE PLACED AT FOUR FEET ON CENTER OR AS DIRECTED BY THE AGENCY ENGINEER.

13. WEAKENED PLANE JOINTS AT LEAST 3/4" DEEP SHALL BE PLACED AT A MINIMUM 16 FEET ON CENTER EXCEPT FOR SIDEWALKS AND DRIVEWAY APPROACHES WHICH SHALL BE A MINIMUM 5 FEET ON CENTER.

14. 3/8 INCH THICK EXPANSION JOINTS SHALL BE PLACED ON BOTH SIDES OF DRIVEWAY APPROACHES, AT CURB AND SIDEWALK RETURN POINTS, DRAINAGE STRUCTURES AND OTHER LOCATIONS AS SHOWN ON THE PLANS.

15. ALL EXPOSED EDGES SHALL BE ROUNDED WITH 1/2 INCH RADIUS TOOL.

16. ALL FLAT SURFACES SHALL BE LIGHT BROOM FINISHED UNLESS OTHERWISE SPECIFIED BY AGENCY ENGINEER.

17. CURBS, SIDEWALKS AND DRIVEWAY APPROACHES SHALL HAVE FORMS REMOVED AND BE BACKFILLED WITHIN SEVEN DAYS AFTER POURING.

18. THE DESIGNATED DIMENSIONS AND SLOPES MAYBE MODIFIED TO ACCOMMODATE EXISTING ADJACENT FACILITIES SUBJECT TO THE APPROVAL OF THE AGENCY ENGINEER.

UNIFORM STANDARDS ALL CITIES AND COUNTY OF MARIN	REQUIREMENTS FOR CONCRETE CURB, GUTTER, SIDEWALK, DRIVEWAY AND OTHER "FLATWORK"				MAY 2008
					DWG. NO. 100
		REV.	DATE	BY	

M:\Standards\County Standards (UCS)\2008 Updated County Standards

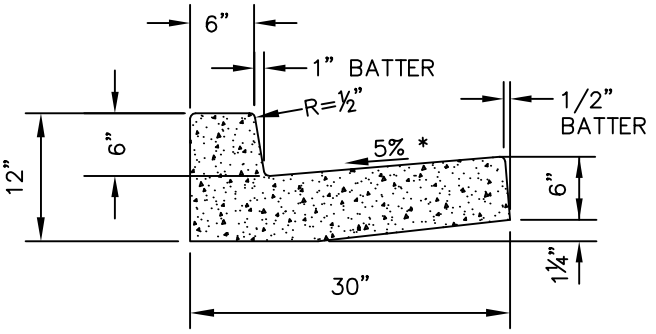

TYPE "A" CURB

* 3% MAX. AT CURB RAMPS

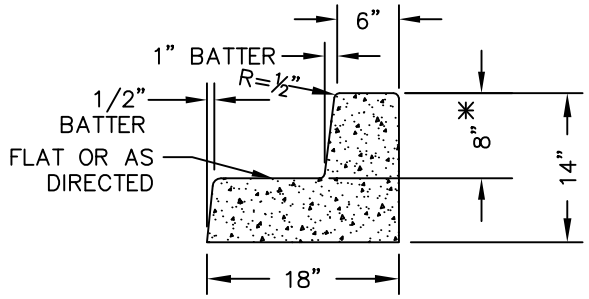

TYPE "B" CURB

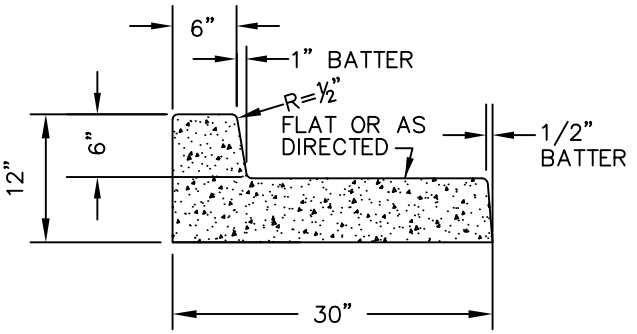

TYPE "C" CURB

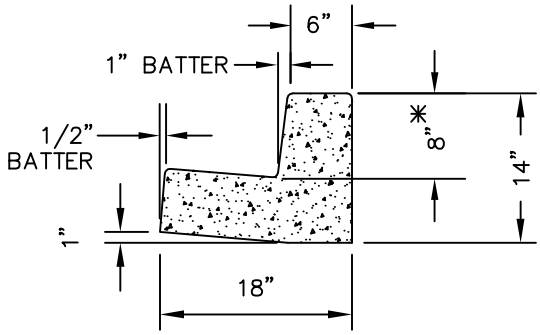

TYPE "D" CURB

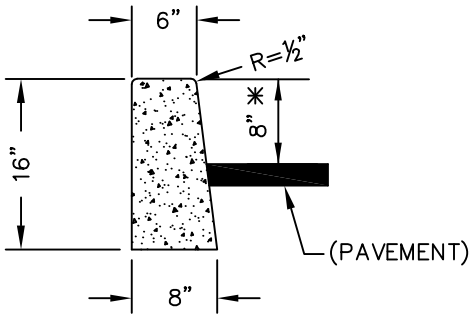

TYPE "E" CURB

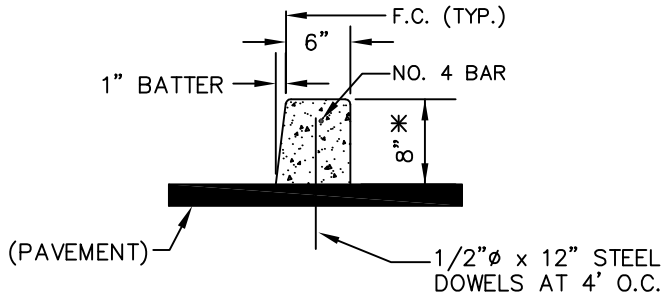

TYPE "F" CURB

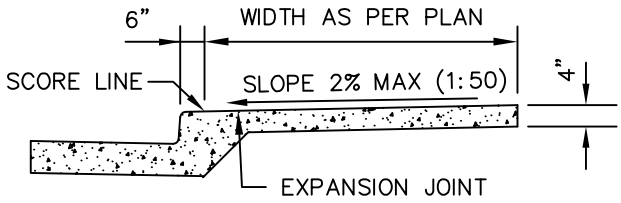

TYPE "A" SIDEWALK

POUR CURB & GUTTER SEPARATELY FROM SIDEWALK

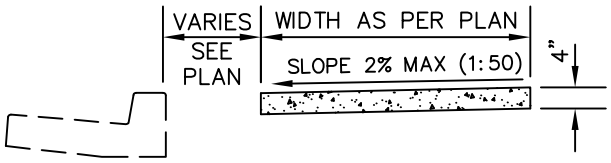

TYPE "B" SIDEWALK

POURED SEPARATE FROM CURB

NOTES:

1. SEE DRAWING NO. 100 FOR GENERAL REQUIREMENTS.
2. ✳ 8" CURB HEIGHT UNLESS 6" HEIGHT APPROVED BY AGENCY ENGINEER.

UNIFORM STANDARDS ALL CITIES AND COUNTY OF MARIN	CURB, GUTTER AND SIDEWALK DETAILS				MAY 2008
					DWG. NO. 105
		REV.	DATE	BY	

M:\Standards\County Standards (UCS)\2008 Updated County Standards

CATCH BASIN, TURNING STRUCTURE, MANHOLE AND DROP INLET NOTES

1. CONCRETE SHALL BE CLASS "A" (6 SACK MIX) UNLESS OTHERWISE NOTED. STRUCTURE TOPS CAST WITH ADJACENT CURB/SIDEWALK MAY BE CLASS "B" CONCRETE.

2. BASE SHALL BE PLACED AGAINST UNDISTURBED EARTH, SIDES MAY BE FORMED OR PLACED AGAINST UNDISTURBED EARTH.

3. WHERE CONDUITS ARE ENCOUNTERED THAT ARE LARGER IN DIAMETER THAN THE WIDTH OF THE WALL THROUGH WHICH THEY PASS, THE INSIDE DIMENSION OF THE WALLS PERPENDICULAR TO THE DIRECTION OF THE PIPE SHALL BE INCREASED TO 12" WIDER THAN THE OUTSIDE DIAMETER OF THE PIPE.

4. EXPANSION JOINTS SHALL BE PLACED THROUGH CURB AND SIDEWALK AT BOTH SIDES OF CATCH BASINS AND SHALL BE LIMIT OF PAYMENT FOR CURB AND GUTTER. UNIT PRICES FOR DRAINAGE STRUCTURES SHALL INCLUDE CURB, GUTTER AND SIDEWALK POURED WITH DRAINAGE STRUCTURE.

5. NO CONCRETE SHALL BE PLACED PRIOR TO FORM AND STEEL APPROVAL BY THE AGENCY ENGINEER.

6. SEE DRAWING NO. 215 FOR STEP (AS REQUIRED BY AGENCY ENGINEER) AND MANHOLE CASTING DETAIL.

7. SEE DRAWING NO. 220 FOR CATCH BASIN GRATE DETAIL.

8. WALL THICKNESS, REINFORCING, AND STEP (AS REQUIRED BY AGENCY ENGINEER) REQUIREMENTS SHALL BE IN ACCORDANCE WITH THE TABLE BELOW, UNLESS OTHERWISE INDICATED BY THE PROJECT PLANS OR DIRECTED BY THE AGENCY ENGINEER.

9. PLACE 2" WEEPHOLES AS REQUIRED BY THE AGENCY ENGINEER.

10. EQUIVALENT PRECAST STRUCTURES MAY BE SUBSTITUTED AS APPROVED BY THE AGENCY ENGINEER.

11. WALL THICKNESS SHALL NOT EXCEED 10" ON ANY STRUCTURE.

12. PRECAST INLETS AND MANHOLES SHALL HAVE A MINIMUM COMPRESSIVE STRENGTH OF 4000 PSI AT 28 DAYS AND BE DESIGNED TO WITHSTAND H-20 LOADING.

DEPTH	WALL THICKNESS (SEE NOTE #11)	WALL REINFORCEMENT	STEPS REQUIRED
LESS THAN 3'	6"	NO. 4 AT 12" BOTH WAYS	NO
LESS THAN 3'	8"	NONE OUTSIDE ROADWAY. NO. 4 AT 12" BOTH WAYS WITHIN OR ADJACENT TO ROAD.	NO
3' TO 8'	6"	NO. 4 AT 12" BOTH WAYS	AS REQUIRED BY THE AGENCY ENGINEER
OVER 8'	8"	NO. 4 AT 12" BOTH WAYS	AS REQUIRED BY THE AGENCY ENGINEER

UNIFORM STANDARDS ALL CITIES AND COUNTY OF MARIN	NOTES FOR CATCH BASIN, MANHOLE, DROP INLET & TURNING STRUCTURE				MAY 2008
					DWG. NO.
					200
		REV.	DATE	BY	

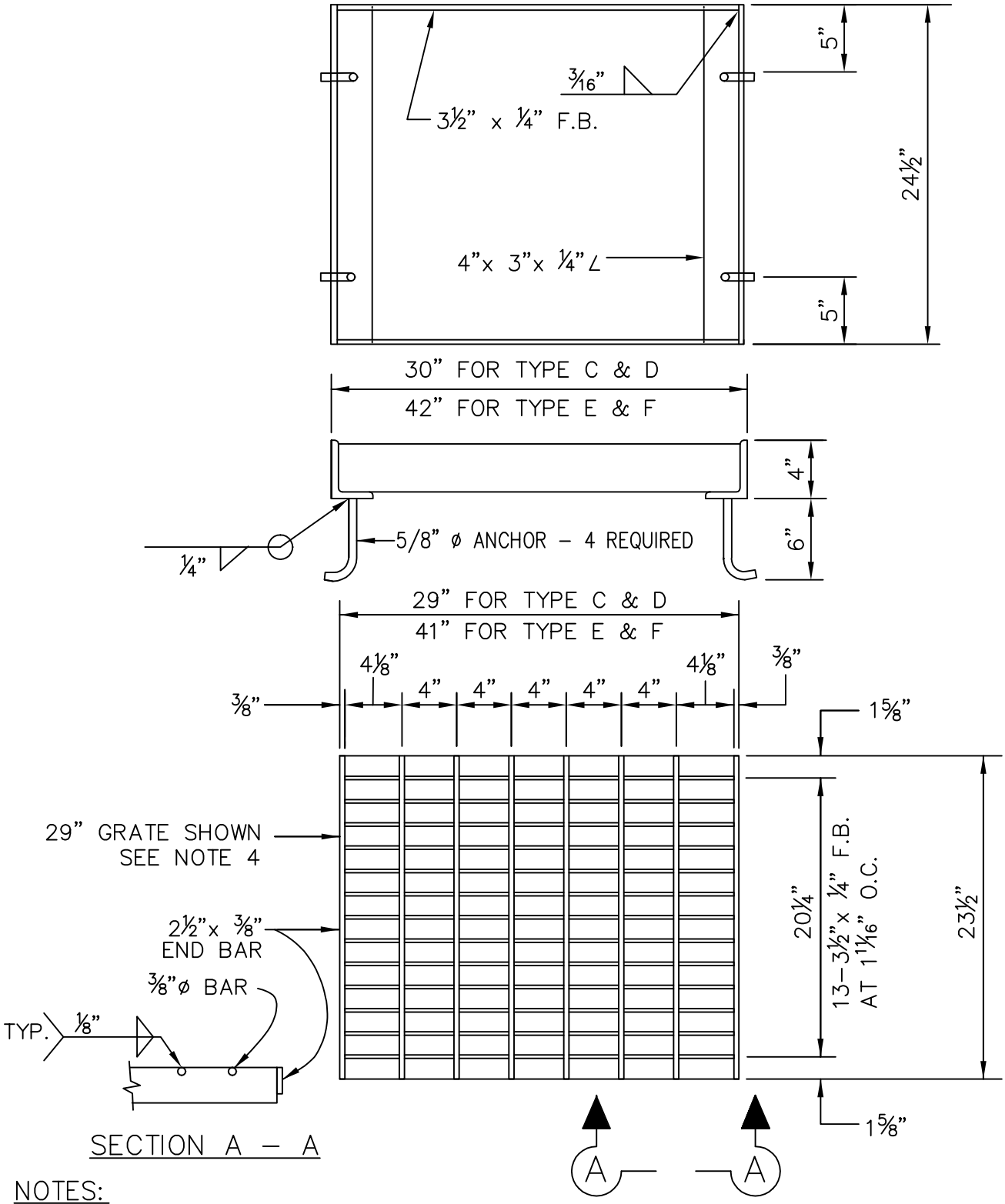

NOTES:

1. ALL STEEL SHALL BE STRUCTURAL GRADE.
2. ALL STEEL SHALL BE HOT DIPPED GALVANIZED AFTER FABRICATION.
3. TOP AND BOTTOM SURFACES OF GRATE SHALL BE GROUND FLUSH AFTER WELDING.
4. FOR 40" GRATE USE STATE STD. GRATE TYPE 24–9 OR 24–12.
5. FOR GRATES IN A PEDESTRIAN PATH OF TRAVEL, GRATE OPENINGS SHALL BE ½" PERPENDICULAR TO THE WALKING DIRECTION.

UNIFORM STANDARDS ALL CITIES AND COUNTY OF MARIN	CATCH BASIN GRATE DETAIL				MAY 2008
					DWG. NO.
		1	4/16/10	SAS	220
		REV.	DATE	BY	

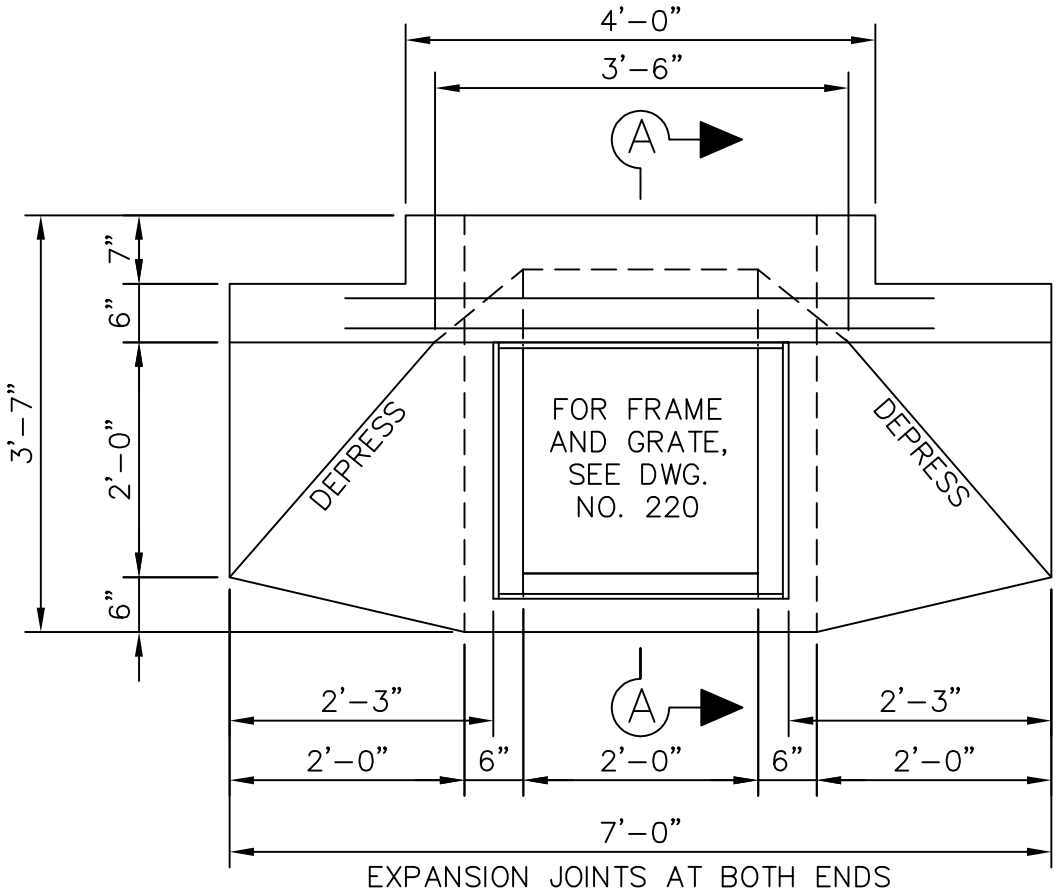

PLAN

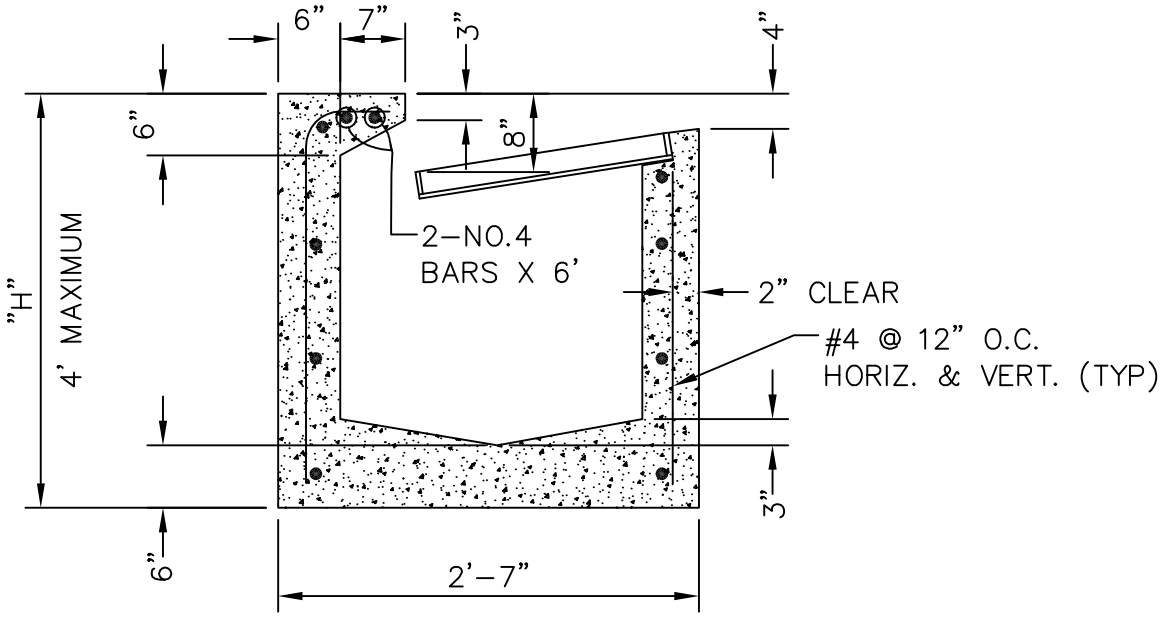

SECTION A – A

NOTE: SEE DRAWING NO. 200 FOR GENERAL NOTES

UNIFORM STANDARDS ALL CITIES AND COUNTY OF MARIN	TYPE "C" CATCH BASIN				MAY 2008
					DWG. NO. 235
		REV.	DATE	BY	

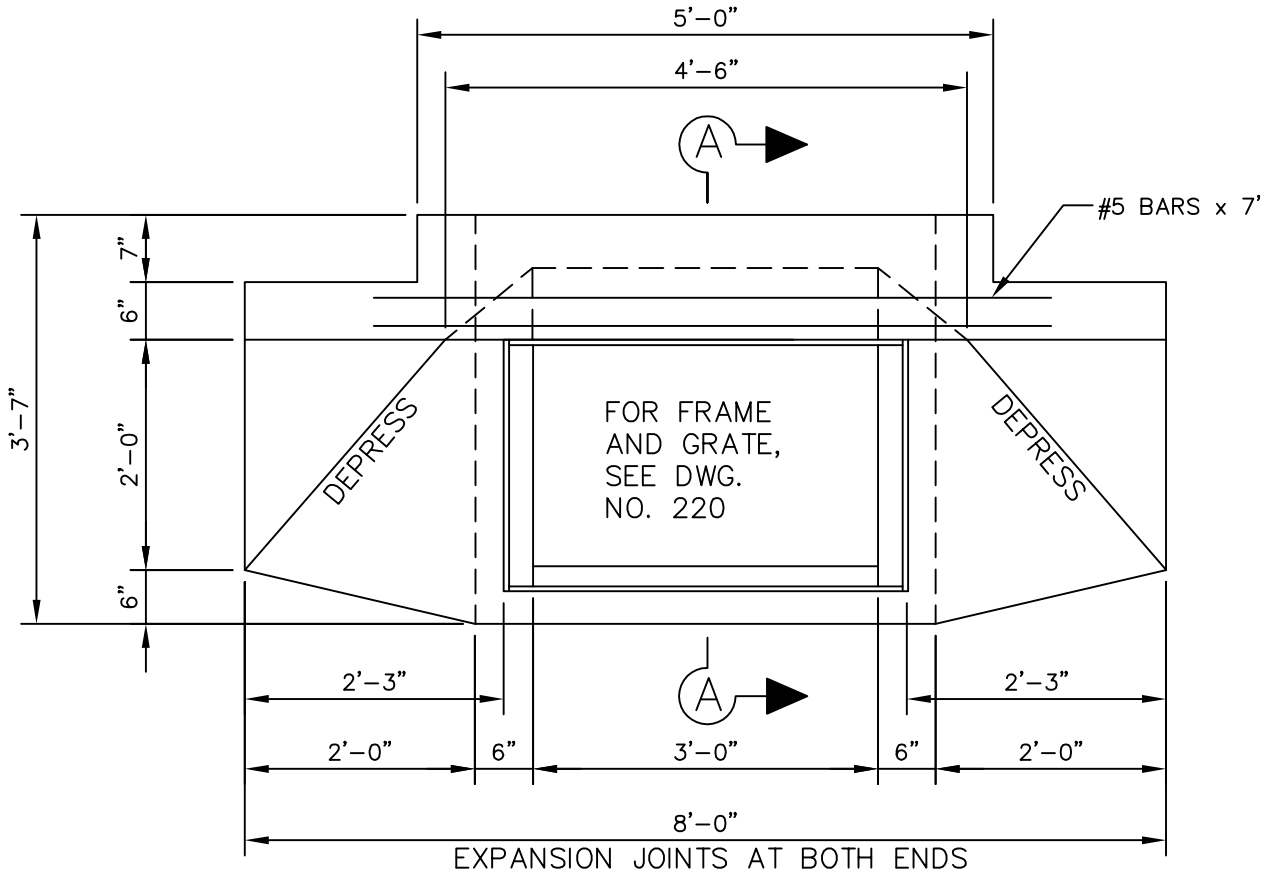

PLAN

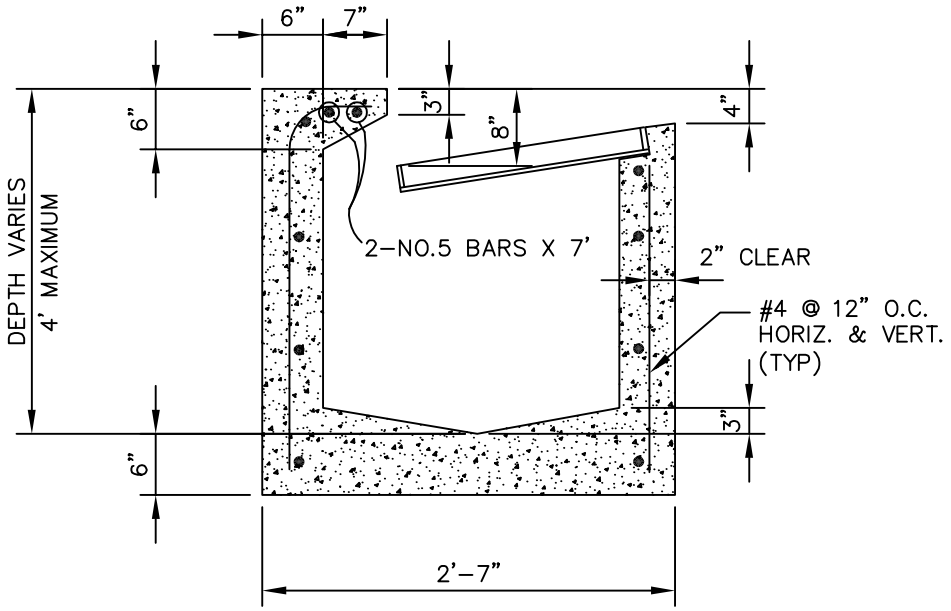

SECTION A-A

NOTE: SEE DRAWING NO. 200 FOR GENERAL NOTES

UNIFORM STANDARDS ALL CITIES AND COUNTY OF MARIN	TYPE "E" CATCH BASIN				MAY 2008
					DWG. NO.
		1	4/16/10	SAS	245
		REV.	DATE	BY	

M:\Standards\County Standards (UCS)\2008 Updated County Standards

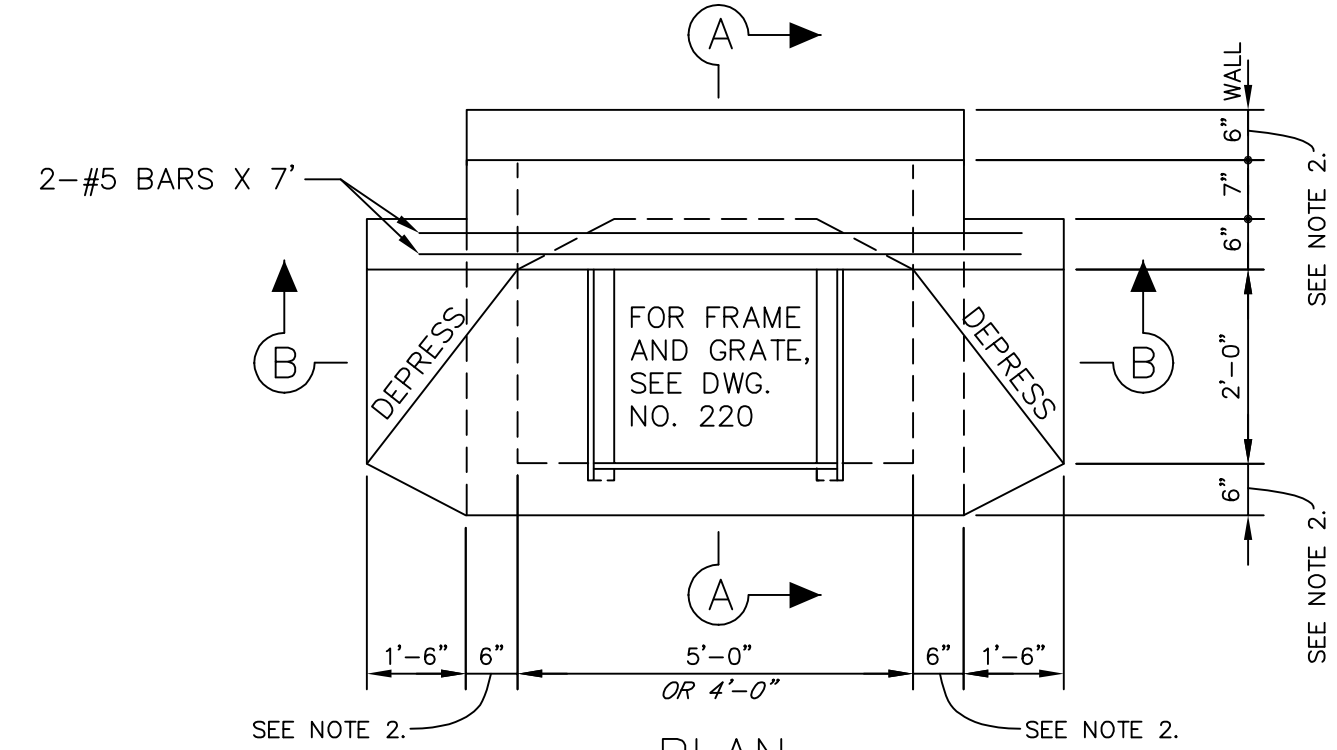

PLAN

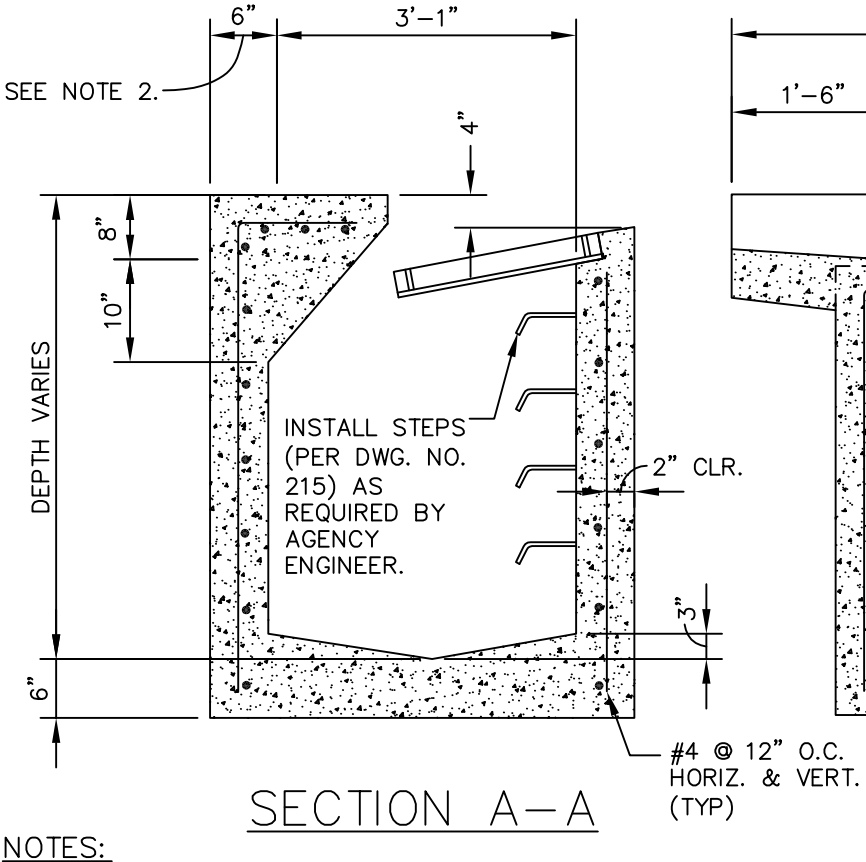

SECTION A–A

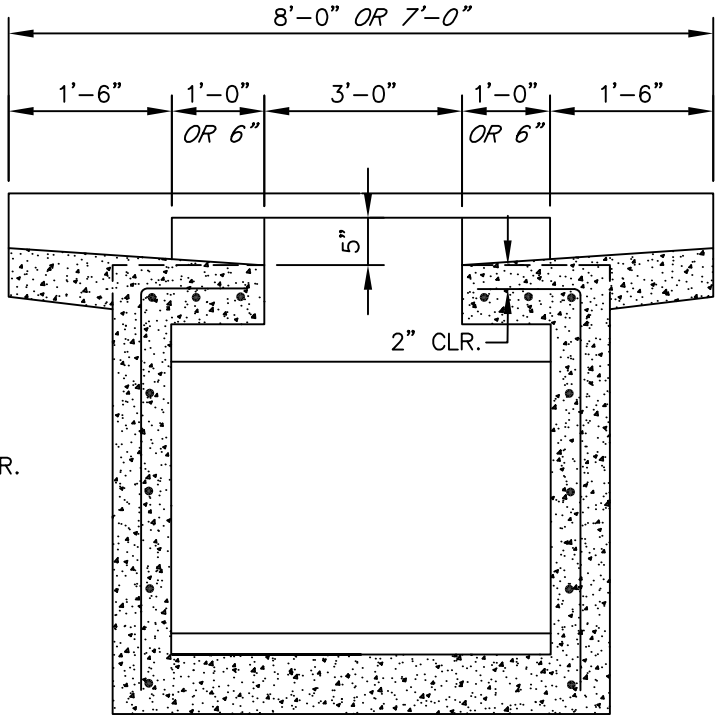

SECTION B–B

NOTES:

1. SEE DRAWING NO. 200 FOR GENERAL NOTES.
2. FOR STRUCTURES > 8' DEEP, WALL THICKNESS = 8"
3. FOR CATCH BASINS FROM 3'–0" TO 6'–0" DEEP THE INSIDE DIMENSION MAY BE 4'–0" BY 3'–1". *DIMENSIONS FOR THESE ARE SHOWN ITALICS.*

UNIFORM STANDARDS ALL CITIES AND COUNTY OF MARIN	TYPE "F" CATCH BASIN				MAY 2008
					DWG. NO.
		1	4/16/10	SAS	250
		REV.	DATE	BY	

M:\Standards\County Standards (UCS)\2008 Updated County Standards